HEWLETT PACKARD

HP 8130A/HP 8131A Programmable Pulse Generator Service Manual Including Options 001 and 020

HEWLETT PACKARD

HP Part No. 08131-90001; Microfiche Part Number: 08131-95001
Printed in the Federal Republic of Germany

First Edition
E1090

This document contains proprietary information which is protected by copyright. All rights are reserved.

No part of this document may be photocopied, reproduced, or translated to another language without the prior written consent of Hewlett Packard GmbH.

© Copyright 1990 by:
Hewlett-Packard GmbH
Herrenberger Str. 130
7030 Böblingen
Federal Republic of Germany

Printing History

New editions are complete revisions of the manual. Update packages, which are issued between editions contain additional and replacement pages to be merged into the manual by the customer. The date on the title page and back cover of the manual, only changes when a new edition is published. When an edition is reprinted, all the prior updates to the edition are incorporated. No information is incorporated into a new edition unless it appears in a prior update.

Control Serial Number: Edition 1 applies directly to all instruments.

Printing History

Edition	Date	Part Number	CODE
Edition 1	March 1990	08131-90001	E0390
	October 1990	08131-90001	E1090

Safety Considerations

The HP 8130A/HP8131A is a Safety Class 1 instrument (instrument with an exposed metal chassis that is directly connected to earth via the power supply cable). The symbol used to indicate a protective earth terminal in the instrument is ⏚.

Operational Safety

The following general safety precautions must be observed during all phases of operation, service, and repair of this product. Failure to comply with these precautions or with specific warnings elsewhere in this manual violates safety standards of design, manufacture, and intended use of the product. Hewlett- Packard Company assumes no liability for the customer's failure to comply with these requirements.

DO NOT operate the product in an explosive atmosphere or in the presence of flammable gases or fumes.

Keep away from live circuits: Operating personnel must not remove equipment covers or shields. Procedures involving the removal of covers or shields are for use by service-trained personnel only. Under certain conditions, dangerous voltages may exist even with the equipment switched off.

To avoid dangerous electrical shock, DO NOT perform procedures involving cover or shield removal unless you are qualified to do so.

DO NOT operate damaged equipment: Whenever it is possible that the safety protection features built into this product have been impaired, either through physical damage, excessive moisture, or any other reason, REMOVE POWER and do not use the product until safe operation can be verified by service-trained personnel. If necessary, return the product to a Hewlett-Packard Sales and Service Office for service and repair to ensure that safety features are maintained.

DO NOT service or adjust alone: Do not attempt internal service or adjustment unless another person, capable of rendering first aid and resuscitation, is present.

DO NOT substitute parts or modify equipment: Because of the danger of introducing additional hazards, do not install substitute parts or perform any unauthorized modification to the product. Return the product to a Hewlett-Packard Sales and Service Office for service and repair to ensure that safety features are maintained.

Safety Symbols

The apparatus will be marked with this symbol when it is necessary for the user to refer to the instruction manual in order to protect the apparatus against damage.

Indicates dangerous voltages.

Earth terminal.

Protective earth.

Affixed to a product containing static sensitive devices - use anti-static handling procedures to prevent electrostatic discharge damage to components.

Warning

The WARNING sign denotes a hazard. It calls attention to a procedure, practice or the like, which, if not correctly performed or adhered to, could result in injury or loss of life. Do not proceed beyond a WARNING sign until the indicated conditions are fully understood and met.

Caution

The CAUTION sign denotes a hazard. It calls attention to an operating procedure, practice or the like, which, if not correctly performed or adhered to, could result in damage to or destruction of part or all of the equipment. Do not proceed beyond a CAUTION sign until the indicated conditions are fully understood and met.

Notices

Subject Matter

The information in this document is subject to change without notice.

Hewlett-Packard makes no warranty of any kind with regard to this printed material, including, but not limited to, the implied warranties of merchantability and fitness for a particular purpose.

Hewlett-Packard shall not be liable for errors contained herein or for incidental or consequential damages in connection with the furnishing, performance, or use of this material.

Limited Warranty

Warranty

This Hewlett-Packard instrument product is warranted against defects in material and workmanship for a period of one year from date of shipment. During the warranty period, HP will, at its option, either repair or replace products which prove to be defective.

For warranty service or repair, this product must be returned to a service facility designated by HP. Buyer shall pre-pay shipping charges to HP and HP shall pay shipping charges to return the product to Buyer. However , Buyer shall pay all shipping charges, duties, and taxes for products returned to HP from another country.

HP warrants that its software and firmware designated by HP for use with an instrument will execute its programming instructions when properly installed on that instrument. HP does not warrant that the operation of the instrument, software, or firmware will be uninterrupted or error free.

Limitation of Warranty

The foregoing warranty shall not apply to defects resulting from improper or inadequate maintenance by Buyer, Buyer-supplied software or interfacing, unauthorized modification or misuse, operation outside of the environmental specifications for the product, or improper site preparation or maintenance.

No other warranty is expressed or implied. Hewlett Packard specifically disclaims the implied warranties of Merchantability and Fitness for a Particular Purpose.

Exclusive Remedies

The remedies provided herein are Buyer's sole and exclusive remedies. Hewlett Packard shall not be liable for any direct, indirect, special, incidental, or consequential damages whether based on contract, tort, or any other legal theory.

Assistance

Product maintenance agreements and other customer assistance agreements are available for Hewlett-Packard products. For any assistance contact your nearest Hewlett-Packard Sales and Service Office. Addresses are provided at the back of this manual.

Certification

Hewlett-Packard Company certifies that this product met its published specifications at the time of shipment from the factory.

Hewlett-Packard further certifies that its calibration measurements are traceable to the United States National Institute of Standards and Technology, NIST (formerly the United States National Bureau of Standards, NBS) to the extent allowed by the Institute's calibration facility, and to the calibration facilities of other International Standards Organization members.

Radio Frequency Interference Statement Deutsche Bundespost

(Federal Republic of Germany only)

Hersteller Bescheinigung

Hiermit wird bescheinigt, daß das Gerät, HP 8130A/HP 8131A Pulsgenerator, in Übereinstimmung mit den Bestimmungen der Postverfügung 1046/1984 funkentstört ist.

Der Deutschen Bundespost wurde das Inverkehrbringen dieses Gerätes angezeigt und die Berechtigung zur Überprüfung der Serie auf Einhaltung der Bestimmungen eingeräumt.

Zusatzinformation für Meß- und Testgeräte:
Werden Meß- und Testgeräte mit ungeschirmten Kabeln und/oder in offenen Meßaufbauten verwendet, so ist vom Betreiber sicherzustellen, daß die Funkenstörbestimmungen unter Betriebsbedingungen an seiner Grundstücksgrenze eingehalten werden.

Manufacturers Declaration

This is to certify that the HP 8130A/HP 8131A Pulse Generator operates in accordance with the radio frequency interference requirements of Deutsche Bundespost (German Post Office) Directive FTZ 1046/1984.

The German Post Office was notified that this equipment was put into circulation. The German Post Office retains the right to check future Hewlett-Packard model HP 8130A/HP 8131A instruments for compliance with directive FTZ 1046/1984.

Additional information for test and measurement equipment:
If test and measurement equipment is operated with unshielded cables and/or used for measurements on open set-ups, the user must assure that, under operating conditions, the radio interference limits are still met at the border of his premises.

Introduction

This manual is arranged into five categories:

General Information
Descriptions of selected operating principles and installation/removal procedures - Chapters 1 and 2.

Adjustments and performance tests
Setting up procedures for replaced parts and complete performance tests for the instrument - Chapters 3 and 4.

Replaceable Parts
Lists of replaceable/exchangeable parts -Chapter 5, and full parts lists - Appendices B (HP8130A) and C (HP8131A).

Service Information
Theory of operation, trouble shooting charts, and circuit descriptions -Chapter 6

Customer Assistance
Sales and Service information: Appendix A.

Contents

1. **General Information**

Introduction 1-1
Instruments Covered By This Manual 1-2
Safety Requirements 1-2
Product Description 1-2
General 1-2
The HP 8130A Pulse Generator 1-2
The HP 8131A Pulse Generator 1-2
Instrument Controls and Indicators 1-3
General Purpose 1-3
Mode 1-3
Setting up 1-4
Waveform Controls 1-4
Options and Accessories 1-4
Options 1-4
Accessories 1-4
Transition Time Converter (HP 8131A only) 1-5
General Information 1-5
Connector Characteristics 1-5
Typical Performance Characteristics 1-6
HP 8130A 1-7
Specifications 1-7
Error Detection 1-7
Timing Parameters 1-7
Output Levels 1-10
Operating Characteristics 1 10
Timing Parameters 1-10
Inputs and Outputs 1-10
Output Capabilities 1-12
Additional Features 1-12
HP-IB capabilities 1-12
Non-Volatile Memory 1-12
General Environmental 1-13
Storage Temperature 1-13
Operating Temperature 1-13
Humidity 1-13
Power 1-13
Weight 1-13
Dimensions 1-13
Recalibration Period: 1-13
HP 8131A 1-13
Specifications 1-13

Timing Parameters 1-13
Output Levels 1-14
Operating Characteristics 1-15
Differential Outputs 1-15
Trigger Output 1-15
External Input 1-15
Additional Features 1-16
HP-IB capabilities 1-16
Battery 1-16
General Environmental 1-16
Weight 1-16
Dimensions 1-17
Recalibration Period: 1-17

2. Installation

Safety Considerations 2-1
Initial Inspection 2-1
Power Requirements 2-2
Line Voltage Selection 2-2
Power Cable 2-3
Operating Environment 2-4
Temperature 2-5
Humidity 2-5
Instrument Cooling 2-5
HP-IB Interface 2-5
Networks 2-5
Cables and Adapters 2-6
Connector Lock Screw Compatibility 2-6
Removal and Replacement Instructions 2-7
Tools required 2-7
Installation of Output Board 2-8
Installation of SMA Relays 2-9
Installation of Timing board 2-10
Installation of CPU Board 2-11
Installation of Power Supply Unit 2-12
Installation of Motherboard 2-13
Installation of Keyboard Assembly 2-13
Parts Ordering 2-14
Storage and Shipment 2-14
Return Shipping an Instrument to HP 2-14
Packing 2-14
Returning a Circuit Board to HP 2-14
Packing a board 2-14

3. Adjustments

Adjustments to the HP 8130A Output Board . . . 3-1
Adjustments to the HP 8131A Output Board . . . 3-3
Adjustments to the HP 8130A and HP 8131A Timing Board 3-6

4. Performance Tests

Introduction 4-1
Safety 4-1
Test Record 4-1
Recommended Test equipment 4-2
Feedthrough Termination 4-4
1. Period Test 4-5
Specifications 4-5
Equipment 4-5
Setup 4-5
Procedure 4-6
2. Delay Test 4-7
Specifications 4-7
Equipment 4-7
Delay Test, Part 1: Short Delay Test 4-8
Setup 4-8
Procedure 4-9
Delay Test, Part 2: Long Delay Test 4-10
Setup 4-10
Procedure 4-11
3. Double Pulse Test 4-12
Specifications 4-12
Equipment 4-12
Double Pulse Test, Part 1: Short Double Pulse Test 4-13
Setup 4-13
Procedure 4-13
Double Pulse Test, Part 2: Long Double Pulse Test 4-15
Setup 4-15
Procedure 4-16
4. Width Test 4-17
Specifications 4-17
Equipment 4-17
Width Test, Part 1: Short Width Test 4-18
Setup 4-18
Procedure 4-18
Width Test, Part 2: Long Width Tests 4-20
Setup 4-20
Procedure 4-21
5. Jitter Test 4-22
Specifications 4-22
Equipment 4-22
Jitter Test, Part 1: Period Jitter Test 4-23
Setup 4-23
Procedure 4-23
Jitter Test, Part 2: Width Jitter Test 4-25

Setup 4-25
Procedure 4-25
Jitter Test, Part 3: Delay Jitter Test 4-26
Setup 4-26
Procedure 4-27
6. High Level and Low Level Tests 4-28
Specifications 4-28
Equipment 4-28
High Level Test 4-29
Setup 4-29
Procedure 4-30
Low Level Test 4-31
Setup 4-31
Procedure 4-31
7. Transition Time Test 4-32
HP 8130A Specifications 4-32
HP 8131A Specifications 4-32
Equipment 4-32
Setup 1-32
HP 8130A Procedure 4-33
HP 8131A Procedure 4-34
8. Pulse Aberration Test 4-36
Specifications 4-36
Equipment 4-36
Setup 4-36
Procedure 4-37
The HP 8130A Performance Test Record 4-39
The HP 8131A Performance Test Record 4-45

5. Replaceable Parts
Introduction 5-1
Replaceable Parts List 5-1
Reference Designators 5-2
Ordering Information 5-2
Exchange Assemblies 5-2
Direct Mail Order System 5-2

6-0. Instrument Block Diagrams
General 6-0-1
Chapter 6 Subsection details 6-0-1

6-1. Motherboard (A2)
Motherboard 6-1-1
Special Interconnections 6-1-1
Grounds 6-1-2
Voltages 6-1-2

6-2. Power Supply (A14)

Introduction 6-2-1
Block Theory of Operation 6-2-1
Power Input 6-2-2
Power Main Board 6-2-2
Power Control Board 6-2-2
Power Outputs 6-2-3
Power Input 6-2-3
Power Main Board 6-2-4
+15 V Regulation 6-2-4
Control Power +UB 6-2-5
Power-on Reset 6-2-5
Fan Control 6-2-5
Power Control Board 6-2-6
Bias and Reference Voltages 6-2-6
Control Circuits 6-2-6
+15 V Control 6-2-6
Voltage Control 6-2-6
High/Low Tapping Path Control 6-2-6
Foldback Current Limitation 6-2-6
+5.1V Control 6-2-7
−3.25V Control 6-2-7

6-3. CPU Board (A3)

Introduction 6-3-1
Block Theory of Operation 6-3-1
Microprocessor (MPU) 6-3-2
Address Decoder 6-3-2
I/O Selection 6-3-2
Program ROMs 6-3-2
Static RAMs 6-3-2
Keyboard Controller 6-3-2
Device Bus Interface 6-3-2
HP-IB Interface 6-3-2
Control Timing 6-3-3
Reset Logic 6-3-3
Microprocessor Unit (MPU) 6-3-3
I/O Decoding and RAM/ROM Selection 6-3-3
I/O Decoding 6-3-3
RAM/ROM Selection 6-3-4
Control Latch 6-3-5
Interrupt Processing 6-3-5
HP-IB - Interface 6-3-6
Keyboard Controller 6-3-6
Scanning the Keyboard 6-3-7
Scanning the Front Panel LEDs 6-3-7
Device Bus Interface 6-3-8
Battery Back-up 6-3-9
Normal Operating Mode 6-3-9
Battery Back-up Mode 6-3-9
Signal Mnemonics and their Functions 6-3-10

Pin Definitions 6-3-12
Motherboard Connector 6-3-12
Keyboard to CPU Board Connections 6-3-13
HP-IB to CPU Board Connections 6-3-14

6-4. Timing Board (A5)
Introduction 6-4-1
Block Theory of Operation 6-4-2
Trigger Input 6-4-2
Timing Blocks 6-4-2
Adjust Memory 6-4-2
Trigger Input 6-4-3
Timing Block 6-4-3
Bipolar Timing Generator 6-4-4
Mode Control 6-4-4
Current Sources, Voltage Source and Hysteresis Control 6-4-5
Decade Counter 6-4-5
Period Generation 6-4-5
Operation Modes 6-4-6
AUTO - Auto Mode 6-4-6
TRIG - Triggered Mode 6-4-6
GATE - Gate Mode 6-4-6
BURST - Burst Mode 6-4-6
E. WIDTH - External Width Mode 6-4-7
TRANS - Transducer Mode (HP 8131A only) . . 6-4-7
DCYC - Duty Cycle Mode 6-4-7
DOUB - Double Pulse Mode 6-4-7

6-5. HP 8130A Output Board (A26; option 020 - A27)
Block Theory of Operation 6-5-1
Introduction 6-5-1
Slope Generation 6-5-1
Output Amplifier 6-5-2
Fast Slope Generator 6-5-3
Theory of Fast Slope Generation 6-5-4
Slow Slope/Fast Slope Interface 6-5-6
Slow Slope Generator 6-5-7
Introduction 6-5-7
Elimination of Offset 6-5-7
Minimum Transition at Optimum Performance . . 6-5-9
Capacitive Step 6-5-10
Level Shift and Impedance Converter 6-5-11
Output Amplifier 6-5-13
Introduction 6-5-14
Linear Amplifier 6-5-14
Current Handling at Speed 6-5-14
Amplitude Variation Range 6-5-14
Differential Amplifier 6-5-15
Vernier Control Currents 6-5-16
Output Control 6-5-16

Floating Output Amplifier 6-5-17

6-6. HP 8131A Output Board (A26; option 020 - A27/A28)
Introduction 6-6-1
Block Theory of Operation 6-6-1
Transducer Board 6-6-2
Output Amplifier Hybrid 6-6-2
Enable/Disable Switch 6-6-2
Transducer Board 6-6-2
Transducer Mode 6-6-2
Short Pulse Mode 6-6-2
Norm/Complement Switch 6-6-3
Trigger Output Amplifier 6-6-3
Output Amplifier Hybrid 6-6-3
Introduction 6-6-3
Amplitude Control 6-6-4
High Level Control (HIL) 6-6-6
Over voltage Protection 6-6-6
Overshoot Adjust 6-6-7
Enable/Disable Switch 6-6-8

6-7. Troubleshooting
HP 8130A Self-test 6-7-1
Error Messages 6-7-6
Fatal Error Messages 6-7-6
Minor Error Messages 6-7-6
HP 8131A Self-test 6-7-9
Structure 6-7-9
General 6-7-9
Self-test Multiplexer (U108) Voltages 6-7-9
Errors 6-7-14
Errors X00 to X03 6-7-14
Errors X04 and X05 6-7-14
Errors X06 and X07 6-7-14
Error Messages 6-7-15
Fatal Error Messages 6-7-15
Minor Error Messages 6-7-15

A. Sales and Service Offices
Information A-1
Asia A-1
Canada A-1
Eastern Europe A-1
Northern Europe A-1
South East Europe A-2
Middle East and Central Africa A-2
United Kingdom A-2
United States of America A-2
Eastern USA A-2
Midwestern USA A-3
Southern USA A-3

Western USA A-3
Other International Areas A-3

B. **HP 8130A Parts Lists**
Introduction B-1
Reference Designators B-1
Parts Information B-1
Ordering Information B-2
Standard Instrument Parts Lists B-5
Master List B-5
Keyboard B-7
Motherboard B-11
Microprocessor Board B-12
Power Control Board B-16
Timing Board B-21
Main Power Board B-38
Channel 1 Board B-43
Dual-channel Instrument Parts Lists B-68
Master List Option 020 . . . . . B-68
Keyboard Option 020 . . . . . B-69
Timing Board Option 020 . . . . . B-74
Channel 2 Board Option 020 . . . . . B-100

C. **HP 8131A Parts Lists**
Introduction . . . . . C-
Reference Designators C-1
Parts Information C-1
Ordering Information C-2
Standard Instrument Parts Lists C-5
Master List C-5
Keyboard C-7
Motherboard C-11
Microprocessor Board C-12
Power Control Board C-16
Timing Board C-21
Main Power Board C-38
Channel 1 Board C-43
Dual-channel Instrument Parts Lists C-61
Master List Option 020 . . . . . C-61
Keyboard Option 020 . . . . . C-62
Timing Board Option 020 . . . . . C-67
Channel 1 Board Option 020 . . . . . C-93
Channel 2 Board Option 020 . . . . . C-110

D. **Backdating**
Introduction D-1
HP 8130A D-1
HP 8131A D-2

Index

Figures

1-1. Control Relationships 1-3
1-2. Time Converters 1-5
1-3. Transition Time Converter Waveforms 1-6
2-1. Line Voltage Switch Assembly 2-3
2-2. Power Cables - Plug Identification 2-4
2-3. HP-IB Connector 2-6
2-4. 2-12
3-1. Transducer Board Layout 3-4
4-1. 50 Ω, 0.1%, 10 W Feedthrough Termination . . . 4-4
5-1. Parts Identification 5-5
5-2. Parts Identification 5-6
5-3. Parts Identification 5-7
5-4. Parts Identification 5-8
5-5. Parts Identification 5-9
5-6. Parts Identification 5-10
5-7. Parts Identification 5-11
5-8. Parts Identification 5-12
5-9. Parts Identification 5-13
6-0-1. HP 8130A Identifier Block Diagram 6-0-3
6-0-2. HP 8130A Functional Block Diagram 6-0-4
6-0-3. HP 8131A Identifier Block Diagram 6-0-5
6-0-4. HP 8131A Functional Block Diagram 6-0-6
6-1-1. Motherboard Component Layout 6-1-7
6-2-1. Modular Block Diagram 6-2-1
6-2-2. Power Supply Block Diagram 6-2-9
6-2-3. Main Board Component Layout 6-2-11
6-2-4. Control Board Component Layout 6-2-13
6-2-5. Power Main Board Schematics (sheet 1 of 2) . . . 6-2-15
6-2-6. Power Main Board Schematics (sheet 2 of 2) . . . 6-2-17
6-2-7. Power Control Board Schematics (sheet 1 of 2) . . 6-2-19
6-2-8. Power Control Board Schematics (sheet 2 of 2) . . 6-2-21
6-3-1. Module Block Diagram 6-3-1
6-3-2. HP 8130A/8131A CPU Board Block Diagram . . 6-3-15
6-3-3. HP 8130A/8131A CPU Board Component Layout 6-3-17
6-3-4. HP 8130A/8131A CPU Board Schematics (sheet 1 of 5) 6-3-19
6-3-5. HP 8130A/8131A CPU Board Schematics (sheet 2 of 5) 6-3-21
6-3-6. HP 8130A/8131A CPU Board Schematics (sheet 3 of 5) 6-3-23
6-3-7. HP 8130A/8131A CPU Board Schematics (sheet 4 of 5) 6-3-25

6-3-8. HP 8130A/8131A CPU Board Schematics (sheet 5 of 5) 6-3-27
6-3-9. HP 8130A Keyboard Component Layout (Standard and Option 020) 6-3-29
6-3-10. HP 8130A Standard Keyboard Schematics (sheet 1 of 2) 6-3-31
6-3-11. HP 8130A Standard Keyboard Schematics (sheet 2 of 2) 6-3-33
6-3-12. HP 8130A Option 020 Keyboard Schematics (sheet 1 of 2) 6-3-35
6-3-13. HP 8130A Option 020 Keyboard Schematics (sheet 2 of 2) 6-3-37
6-3-14. HP 8131A Keyboard Component Layout (Standard and Option 020) 6-3-39
6-3-15. HP 8131A Standard Keyboard Schematics (sheet 1 of 2) 6-3-41
6-3-16. HP 8131A Standard Keyboard Schematics (sheet 2 of 2) 6-3-43
6-3-17. HP 8131A Option 020 Keyboard Schematics (sheet 1 of 2) 6-3-45
6-3-18. HP 8131A Option 020 Keyboard Schematics (sheet 2 of 2) 6-3-47
6-4-1. Module Block Diagram 6-4-2
6-4-2. Timing Block Diagram 6-4-4
6-4-3. Timing Board Block Diagram 6-4-9
6-4-4. HP 8130A Standard Timing Board Component Layout 6-4-11
6-4-5. HP 8130A Standard Timing Board Component Location Chart 6-4-13
6-4-6. HP 8130A Option 020 Timing Board Component Layout 6-4-15
6-4-7. HP 8130A Option 020 Timing Board Component Location Chart 6-4-17
6-4-8. HP 8130A Standard Timing Board Schematics (sheet 1 of 8) 6-4-19
6-4-9. HP 8130A Standard Timing Board Schematics (sheet 2 of 8) 6-4-21
6-4-10. HP 8130A Standard Timing Board Schematics (sheet 3 of 8) 6-4-23
6-4-11. HP 8130A Standard Timing Board Schematics (sheet 4 of 8) 6-4-25
6-4-12. HP 8130A Standard Timing Board Schematics (sheet 5 of 8) 6-4-27
6-4-13. HP 8130A Standard Timing Board Schematics (sheet 6 of 8) 6-4-29
6-4-14. HP 8130A Standard Timing Board Schematics (sheet 7 of 8) 6-4-31
6-4-15. HP 8130A Standard Timing Board Schematics (sheet 8 of 8) 6-4-33
6-4-16. HP 8130A Option 020 Timing Board Schematics (sheet 1 of 12) 6-4-35

6-4-17. HP 8130A Option 020 Timing Board Schematics (sheet 2 of 12) 6-4-37
6-4-18. HP 8130A Option 020 Timing Board Schematics (sheet 3 of 12) 6-4-39
6-4-19. HP 8130A Option 020 Timing Board Schematics (sheet 4 of 12) 6-4-41
6-4-20. HP 8130A Option 020 Timing Board Schematics (sheet 5 of 12) 6-4-43
6-4-21. HP 8130A Option 020 Timing Board Schematics (sheet 6 of 12) 6-4-45
6-4-22. HP 8130A Option 020 Timing Board Schematics (sheet 7 of 12) 6-4-47
6-4-23. HP 8130A Option 020 Timing Board Schematics (sheet 8 of 12) 6-4-49
6-4-24. HP 8130A Option 020 Timing Board Schematics (sheet 9 of 12) 6-4-51
6-4-25. HP 8130A Option 020 Timing Board Schematics (sheet 10 of 12) 6-4-53
6-4-26. HP 8130A Option 020 Timing Board Schematics (sheet 11 of 12) 6-4-55
6-4-27. HP 8130A Option 020 Timing Board Schematics (sheet 12 of 12) 6-4-57
6-4-28. HP 8131A Standard Timing Board Component Layout 6-4-59
6-4-29. HP 8131A Standard Timing Board Component Location Chart 6-4-61
6-4-30. HP 8131A Option 020 Timing Board Component Layout 6-4-63
6-4-31. HP 8131A Option 020 Timing Board Component Location Chart 6-4-65
6-4-32. HP 8131A Standard Timing Board Schematics (sheet 1 of 8) 6-4-67
6-4-33. HP 8131A Standard Timing Board Schematics (sheet 2 of 8) 6-4-69
6-4-34. HP 8131A Standard Timing Board Schematics (sheet 3 of 8) 6-4-71
6-4-35. HP 8131A Standard Timing Board Schematics (sheet 4 of 8) 6-4-73
6-4-36. HP 8131A Standard Timing Board Schematics (sheet 5 of 8) 6-4-75
6-4-37. HP 8131A Standard Timing Board Schematics (sheet 6 of 8) 6-4-77
6-4-38. HP 8131A Standard Timing Board Schematics (sheet 7 of 8) 6-4-79
6-4-39. HP 8131A Standard Timing Board Schematics (sheet 8 of 8) 6-4-81
6-4-40. HP 8131A Option 020 Timing Board Schematics (sheet 1 of 12) 6-4-83
6-4-41. HP 8131A Option 020 Timing Board Schematics (sheet 2 of 12) 6-4-85

6-4-42. HP 8131A Option 020 Timing Board Schematics (sheet 3 of 12) 6-4-87
6-4-43. HP 8131A Option 020 Timing Board Schematics (sheet 4 of 12) 6-4-89
6-4-44. HP 8131A Option 020 Timing Board Schematics (sheet 5 of 12) 6-4-91
6-4-45. HP 8131A Option 020 Timing Board Schematics (sheet 6 of 12) 6-4-93
6-4-46. HP 8131A Option 020 Timing Board Schematics (sheet 7 of 12) 6-4-95
6-4-47. HP 8131A Option 020 Timing Board Schematics (sheet 8 of 12) 6-4-97
6-4-48. HP 8131A Option 020 Timing Board Schematics (sheet 9 of 12) 6-4-99
6-4-49. HP 8131A Option 020 Timing Board Schematics (sheet 10 of 12) 6-4-101
6-4-50. HP 8131A Option 020 Timing Board Schematics (sheet 11 of 12) 6-4-103
6-4-51. HP 8131A Option 020 Timing Board Schematics (sheet 12 of 12) 6-4-105
6-5-1. Slope Generator Module Block Diagram 6-5-2
6-5-2. Fast Slope Generation 6-5-3
6-5-3. Fast Slope Theory of Operation 6-5-4
6-5-4. Basic Slope Generator 6-5-7
6-5-5. Elimination of Offset 6-5-8
6-5-6. Slow Slope Range Assignment and Associated Ramp Capacitance 6-5-9
6-5-7. Compensation for Capacitive step 6-5-10
6-5-8. Level Shift 6-5-11
6-5-9. Output Amplifier Block Diagram 6-5-13
6-5-10. Differential Amplifier 6-5-15
6-5-11. Floating Supplies 6-5-17
6-5-12. HP 8130A Output Board Block Diagram 6-5-19
6-5-13. HP 8130A Output Board Component Layout . . 6-5-21
6-5-14. HP 8130A Output Board Component Location Chart 6-5-23
6-5-15. HP 8130A Channel 1 SMD Board Component Layout 6-5-25
6-5-16. HP 8130A Channel 1 SMD Board Component Location Chart 6-5-27
6-5-17. HP 8130A Channel 2 SMD Board Component Layout 6-5-29
6-5-18. HP 8130A Channel 2 SMD Board Component Location Chart 6-5-31
6-5-19. HP 8130A Output Board Schematics (sheet 1 of 17) 6-5-33
6-5-20. HP 8130A Output Board Schematics (sheet 2 of 17) 6-5-35
6-5-21. HP 8130A Output Board Schematics (sheet 3 of 17) 6-5-37
6-5-22. HP 8130A Output Board Schematics (sheet 4 of 17) 6-5-39
6-5-23. HP 8130A Output Board Schematics (sheet 5 of 17) 6-5-41
6-5-24. HP 8130A Output Board Schematics (sheet 6 of 17) 6-5-43
6-5-25. HP 8130A Output Board Schematics (sheet 7 of 17) 6-5-45
6-5-26. HP 8130A Output Board Schematics (sheet 8 of 17) 6-5-47
6-5-27. HP 8130A Output Board Schematics (sheet 9 of 17) 6-5-49
6-5-28. HP 8130A Output Board Schematics (sheet 10 of 17) 6-5-51

6-5-29. HP 8130A Output Board Schematics (sheet 11 of 17) 6-5-53
6-5-30. HP 8130A Output Board Schematics (sheet 12 of 17) 6-5-55
6-5-31. HP 8130A Output Board Schematics (sheet 13 of 17) 6-5-57
6-5-32. HP 8130A Output Board Schematics (sheet 14 of 17) 6-5-59
6-5-33. HP 8130A Output Board Schematics (sheet 15 of 17) 6-5-61
6-5-34. HP 8130A Output Board Schematics (sheet 16 of 17) 6-5-63
6-5-35. HP 8130A Output Board Schematics (sheet 17 of 17) 6-5-65
6-6-1. Module Block Diagram 6-6-1
6-6-2. Short Pulse Mode 6-6-3
6-6-3. Preamplifier and Shaper Voltage Swings 6-6-5
6-6-4. Over voltage Diagram 6-6-6
6-6-5. Load vs AMP/HIL 6-6-7
6-6-6. Duty Cycle Diagram 6-6-8
6-6-7. HP 8131A Output Board Block Diagram 6-6-9
6-6-8. HP 8131A Output Board Component Layout . . 6-6-11
6-6-9. HP 8131A Output Board Component Location Chart 6-6-13
6-6-10. HP 8131A Standard Transducer Board Component Layout 6-6-15
6-6-11. HP 8131A Option Channel 1 Transducer Board Component Layout 6-6-17
6-6-12. HP 8131A Option Channel 2 Transducer Board Component Layout 6-6-19
6-6-13. HP 8131A Output Board Schematics (sheet 1 of 6) 6-6-21
6-6-14. HP 8131A Output Board Schematics (sheet 2 of 6) 6-6-23
6-6-15. HP 8131A Output Board Schematics (sheet 3 of 6) 6-6-25
6-6-16. HP 8131A Output Board Schematics (sheet 4 of 6) 6-6-27
6-6-17. HP 8131A Output Board Schematics (sheet 5 of 6) 6-6-29
6-6-18. HP 8131A Output Board Schematics (sheet 6 of 6) 6-6-31
6-6-19. HP 8131A Transducer Board Schematics (sheet 1 of 4) 6-6-33
6-6-20. HP 8131A Transducer Board Schematics (sheet 2 of 4) 6-6-35
6-6-21. HP 8131A Transducer Board Schematics (sheet 3 of 4) 6-6-37
6-6-22. HP 8131A Transducer Schematics (sheet 4 of 4) . 6-6-39
6-7-1. HP 8130A Flowchart - Part 1 6-7-2
6-7-2. HP 8130A Flowchart - Part 2 6-7-3
6-7-3. HP 8130A Flowchart - Part 3 6-7-4
6-7-4. HP 8130A Flowchart - Part 4 6-7-5
6-7-5. HP 8131A Flowchart - Part 1 6-7-11
6-7-6. HP 8131A Flowchart - Part 2 6-7-12
6-7-7. HP 8131A Flowchart - Part 3 6-7-13

Tables

1-1. Maximum Values of WIDTH, DCYC, and DELAY versus PERIOD 1-7
1-2. Maximum Values of DOUB versus PERIOD . . . 1-7
2-1. Line Voltage Ranges 2-2
2-2. Line Voltage and Fuse Selection 2-2
2-3. 2-7
4-1. 4-2
5-1. Reference Designators and Abbreviations 5-3
5-2. Replaceable Parts 5-14
5-3. HP 8130A Exchange Items 5-16
5-4. HP 8131A Exchange Items 5-17
6-1-1. motherboard Connectors 6-1-1
6-1-2. Pin definitions on Motherboard: Signal and Service Connectors 6-1-3
6-1-3. Pin definitions on Motherboard: CPU Board Connector 6-1-4
6-1-4. Pin definitions on Motherboard: Power Supply Connector 6-1-5
6-1-5. Pin definitions on Motherboard: Power Supply Connector 6-1-6
6-3-1. I/O Functions Selection 6-3-4
6-3-2. RAM/ROM Selection 6-3-4
6-3-3. Control Latch Bit Assignment 6-3-5
6-3-4. Interrupts 6-3-5
6-3-5. Keyboard Controller Select Lines 6-3-6
6-3-6. Device Bus Address Lines 6-3-8
6-3-7. Device Bus Control Lines 6-3-8
6-3-8. Signal Mnemonics and their Functions 6-3-10
6-3-9. Motherboard Connector Pin Definitions 6-3-12
6-3-10. Keyboard and CPU Pin Definitions 6-3-13
6-3-11. HP-IB and CPU Pin Definitions 6-3-14
6-5-1. U2 Signal Definitions 6-5-16
6-5-2. Amplitude Range Truth Table 6-5-16
6-7-1. Power-On Self-Test Errors 6-7-6
6-7-2. U108 Voltages for First Page of Flow Diagram - NORM 6-7-9
6-7-3. U108 Voltages for Second Page of Flow Diagram - COMP 6-7-9
6-7-4. U108 Voltages for Third Page of Flow Diagram - THRE = -5 V 6-7-10
6-7-5. Hybrid Pin Voltages 6-7-14
6-7-6. Power-On Self-Test Errors 6-7-15
B-1. HP 8130A Parts Manufacturers B-3

B-2. 8130A Standard Instrument Parts List B-5
B-3. 8130A Standard Keyboard Parts List B-7
B-4. 8130A Motherboard Parts List B-11
B-5. 8130A Microprocessorboard Parts List B-12
B-6. 8130A Power Control Board Parts List B-16
B-7. 8130A Standard Timing Board Parts List B-21
B-8. 8130A Main Power Board Parts List B-38
B-9. 8130A Channel 1 Board Parts List B-43
B-10. 8130A Option 020 Instrument Parts List B-68
B-11. 8130A Option 020 Keyboard Parts List B-69
B-12. 8130A Option 020 Timing Board Parts List . . . B-74
B-13. 8130A Option 020 Channel 2 Board Parts List . . B-100
C-1. HP 8131A Parts Manufacturers C-3
C-2. 8131A Standard Instrument Parts List C-5
C-3. 8131A Standard Keyboard Parts List C-7
C-4. 8131A Motherboard Parts List C-11
C-5. 8131A Microprocessorboard Parts List C-12
C-6. 8131A Power Control Board Parts List C-16
C-7. 8131A Standard Timing Board Parts List C-21
C-8. 8131A Main Power Board Parts List C-38
C-9. 8131A Standard Channel 1 Board Parts List . . . C-43
C-10. 8131A Option 020 Instrument Parts List C-61
C-11. 8131A Option 020 Keyboard Parts List C-62
C-12. 8131A Option 020 Timing Board Parts List . . . C-67
C-13. 8131A Option 020 Channel 1 Board Parts List . . C-93
C-14. 8131A Option 020 Channel 2 Board Parts List . . C-110
D-1. Timing Board D-1
D-2. Output Board D-2
D-3. Timing Board D-2
D-4. Output Board D-3
D-5. CPU Board D-3

1

General Information

Introduction

This service manual contains information for testing and servicing the HP 8130A/HP 8131A Pulse Generator; it includes installation procedures and a list of recommended test equipment.

The manual is divided into six chapters and three appendices as follows:

- **Chapter 1** General Information
- **Chapter 2** Installation
- **Chapter 3** Performance Tests
- **Chapter 4** Adjustments
- **Chapter 5** Replaceable Parts
- **Chapter 6** Service Information
- **Appendix A** Sales and Service Offices, directory
- **Appendix B** Parts Lists
- **Appendix C** Backdating Information

Information for operating, programming and interfacing the HP 8130A/HP 8131A is contained in the Operating and Programming manual supplied with the instrument.

This General Information includes safety requirements, a product description and a list of accessories. Essential information on the specifications and operating characteristics are also supplied.

The title page of this manual contains a microfiche part number. This number can be used to order 4 x 6 inch microfilm transparencies of this manual. Each of the microfiche transparencies, holds up to 96 photo duplicates of manual pages and illustrations.

Instruments Covered By This Manual

The information contained in this manual applies to both versions of the HP 8130A/HP 8131A Pulse Generator that is, it covers the both the single and double (option 020) channel instruments.

In addition to the change information, there may be other supplementary information included where appropriate. To keep this manual as current and as accurate as possible, Hewlett- Packard recommends that you periodically request the latest Manual Changes Supplement.

Safety Requirements

Specific warnings, cautions and instructions, are placed wherever necessary in the manual. These must be observed during all phases of operation, service and repair of the instrument. Failure to comply with these instructions could cause violation of the safety standards of design and intended use of the HP 8130A/HP 8131A Pulse Generator. Hewlett-Packard assumes no liability for any failure of the customer to comply with these safety requirements.

Product Description

General

The standard instrument contains one channel; a second channel option is available but this can not be fitted retrospectively. The HP 8130A/HP 8131A Pulse Generator must be ordered as a single or double channel model. There are two methods of control available for the instrument:

- **Local mode** Where all operations are set up or changed via the manual controls of the front panel.
- **Remote Mode** Where the instrument is controlled by an external computer via suitable programming.

The HP 8130A Pulse Generator

The HP 8130A is a programmable 300 MHz pulse generator. It provides output signals with an amplitude ranging from 100 mVp-p to 5.00 Vp-p and variable transition times from 1 ns to 100 μs.

The HP 8131A Pulse Generator

The HP 8131A is a programmable 500 MHz pulse generator. It provides differential output signals having an amplitude ranging from 100 mVp-p to 5.00 Vp-p. The signals have fixed transition times of $\leq$ 200 ps.

Instrument Controls and Indicators

The front control panel of the instrument has groups of control keys and indicators, as shown and described below. In many cases a key has multiple duties, successive depressions of a key will cycle through optional duties or selections, available for that key. Those options are indicated by illumination of an adjacent lamp and/or the key top. For example, successive depression of the key below the HIGH lamp, selects the upper amplitude or offset limit, for adjustment.

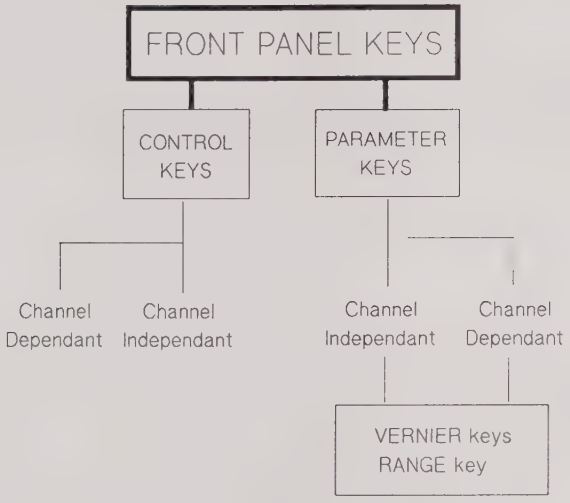

Figure 1-1. Control Relationships

General Purpose

The general purpose indicators and keys are located on the upper part of the instrument front panel. The main display is a four position digital display which shows values and addresses according to operating mode of the HP 8130A/HP 8131A. One of six indicator lamps displays the units (μs, volts etc.) for the digital display. When a displayed value is to be altered, the range keys and vernier keys beside the display may be used.

Mode

There are eight (HP 8130A) or nine (HP 8131A) mode indicator lamps accompanied by two push button keys, which control mode of operation. The indicator lamps illuminate when the HP 8130A/HP 8131A Pulse Generator is operating in isolation and also when being remotely controlled from a computer.

Setting up

This group of keys is used to enter the initial settings for the HP 8130A/HP 8131A. The settings can be entered into memory and previously saved parameters can be recalled from memory if required.

Waveform Controls

The waveform controls enable an operator to set up all the necessary parameters for the output signal. The two channel option has two identical groups of wave form controls.

Options and Accessories

Options

001 Rear panel connectors

020 Second Channel

908 Rack Mounting Flange Kit (P/N 5062-3977)

910 One Operating and Programming Manual and one Service Manual

915 One Service Manual (P/N 08131-90001)

916 One Operating and Programming Manual (P/N 08130-90011/08131-90011)

W30 Total of three years of "Return-to-HP" repair service

W32 Total of three years of "Return-to-HP" calibration service

Accessories

Type	Part Number
Adapter, APC 3.5(m) to APC 3.5(m)	1250-1748
Adapter, APC 3.5(f) to APC 3.5(f)	1250-1749
Adapter, APC 3.5(m) to APC 3.5(f)	1250-1866
Adapter, SMA(m) to SMA(m)	1250-1158
Adapter, SMA(f) to SMA(f)	1250-1159
Adapter, SMA(m) to SMA(f)	1250-1200
Attenuator, 10 dB, SMA	8493A #10
Attenuator, 20 dB, SMA	8493A #20
Cable, co-axial, SMA(m) to SMA(m)	8120-4948
End Cap, Precision, 3.5 and SMA, female	1401-0202
End Cap, Precision, 3.5 and SMA, male	1401-0208
Manual, Microwave Connector Care	08510-90064

Torque Wrench, Precision 3.5 connectors	
8 lb-inch/90 N-cm	8710-1765
Torque Wrench, SMA connectors	
5 lb-inch/56 N-cm	8710-1582
Transition Time Converter, 300 ps	15432A
Transition Time Converter, 500 ps	15433A
Transition Time Converter, 1 ns	15434A

Transition Time Converter (HP 8131A only)

General Information

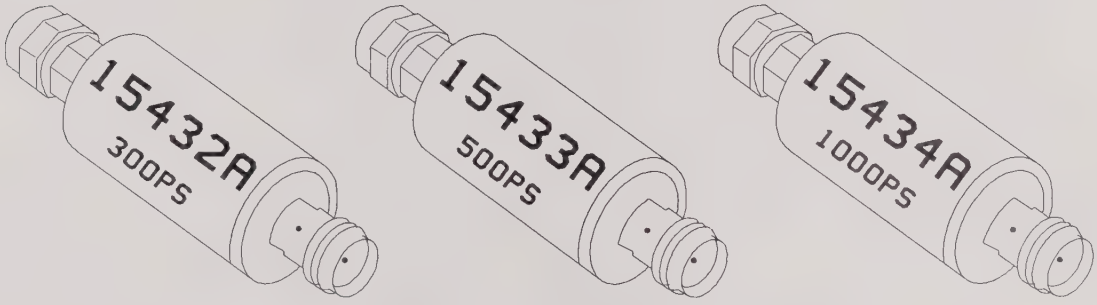

Figure 1-2. Time Converters

The transition time converter, converts the fixed transition time of a HP 8131A (normally less than 200 ps) to a fixed transition time of 300, 500 or 1000 ps according to the model used. The design of the converter and the slower transition time, result in a better pulse performance, so that reflection and overshoot sensitive applications can be satisfied.

Connector Characteristics

The transition time converter has SMA (m,f) connectors. Connect carefully to the HP 8131A. When a converter is not in use, protect the end connectors with the protective caps.

Typical Performance Characteristics

	15432A	15433A	15434A
Output Transition Times	300 ps	500 ps	1000 ps
Intrinsic Transition Times	260 ps	480 ps	990 ps
3 dB Corner Frequency	1120 MHz	660 MHz	330 MHz
Input Voltage	<10.0 V peak-to-peak		
Insertion Loss	<0.2 dB		
Overshoot and Ringing	<5%		
VSWR	<2.0		

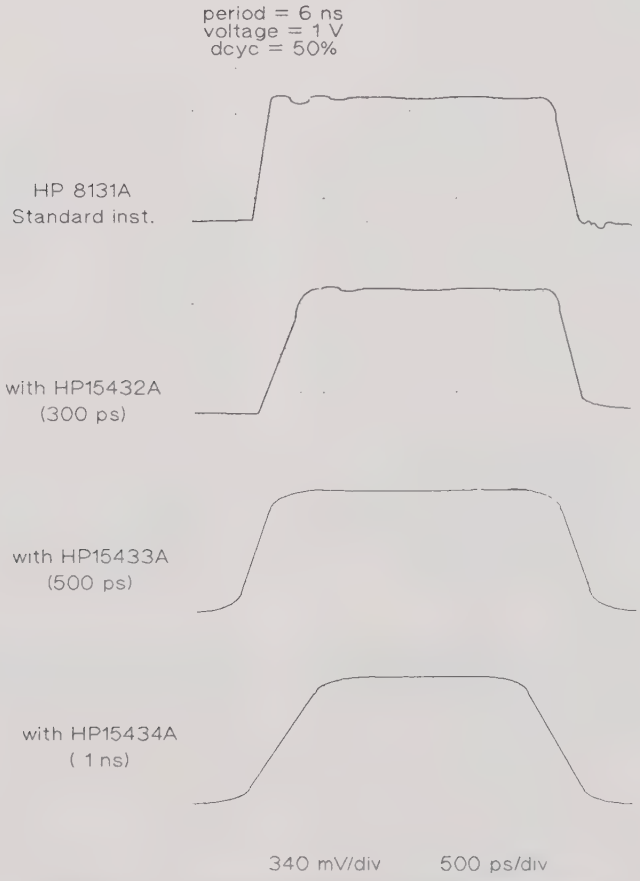

Figure 1-3. Transition Time Converter Waveforms

Specifications

Specifications describe the instruments warranted performance. Non-warranted values are described as "typical".

All specifications apply after a 30 minute warm-up phase with 50Ω load resistance at all outputs, and are valid at ambient temperatures in the range 0°C to 55°C.

Error Detection

An error display indicates that a programmed setting exceeds the specified range, and that the output may be invalid. If the limiting condition is important in the application the output should be verified on an oscilloscope. In other cases, the timing should be adjusted until the error display turns off, indicating that all outputs are valid.

Table 1-1. Maximum Values of WIDTH, DCYC, and DELAY versus PERIOD

PERIOD(ns)	On-Time	DELAY
3.33 ... 4.99	0.5×PERIOD	0.5×PERIOD-1ns
5.00 ... 19.9	0.7×PERIOD-1ns	0.7×PERIOD-2ns
≥ 20.0	0.9×PERIOD-5ns	0.9×PERIOD-6ns

Note

On-Time in this table refers to the value set by DCYC (duty cycle) as well as by WIDTH.

Table 1-2. Maximum Values of DOUB versus PERIOD

PERIOD(ns)	DOUB
3.33 ... 7.19	n/a
7.20 ... 9.99	0.5×PERIOD
≥ 10.0	0.9×PERIOD-4ns

Timing Parameters

Measurement Conditions Automatic operating mode, measured at 50% of amplitude and using the fastest transition times.

Resolution:	3 digits, best case: 10ps.
Repeatability:	Factor of 4 better than accuracy.
RMS-Jitter:	0.025% of programmed value + 15ps (0.05% of programmed value +15ps for the range from 10ns to 100ns)

Period

Range:	3.33ns to 99.9ms
Accuracy:	±5% of programmed value ±100ps

Width

Range: 1.5ns to 99.9ms (See Table 1-1 for the maximum)
Accuracy: ±5% of programmed value ±250ps.

Delay

This value is measured between the trigger output at TRIG OUTPUT and the pulse at OUTPUT or $\overline{\text{OUTPUT}}$.

Double Pulse and Delay are mutually exclusive.

Fixed Delay: 18ns
Variable Range: 0ns to 99.9ms (See Table 1-1 for maximum)
Accuracy: ±5% if programmed value ±1.5ns.

Double Pulse

Period ≥7.20ns

Double Pulse and Delay are mutually exclusive.

Range: 3.33ns to 99.9ms (see Table 1-2 for maximum)
Accuracy: ±5% of programmed value ±250ps

Transition Times

These are measured at 10% to 90% of amplitude

Range: 1ns to 100μs
The range at 20% to 80% of amplitude has a typical lower limit of 600ps.

Leading and trailing edges are independently programmable within the following ranges

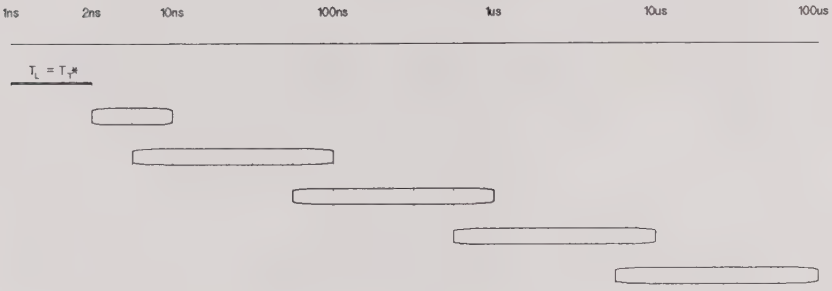

* Leading and trailing edges are assigned the same value.

Accuracy: ±10% of programmed value ±300ps

Linearity:

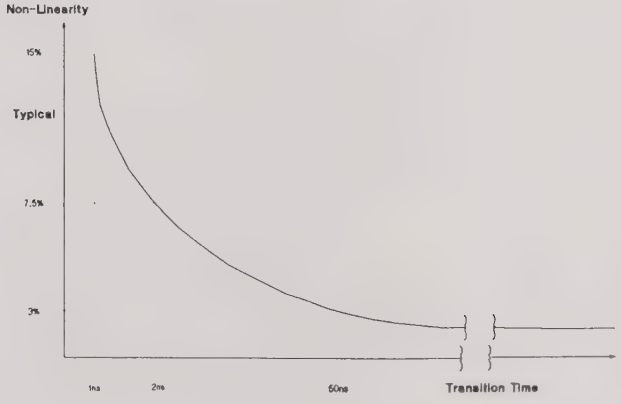

Maximum values: Conflict with other timing parameters may cause amplitude clipping and is indicated by the "Excessive" display.

Output Levels

Output levels double when driving into open circuits. The instrument disables outputs if levels exceed ±6.5V or if the amplitude exceeds 6.5Vp-p.

Resolution:	3 Digits, best case: 10mV.
Level Accuracy:	±1% of programmed value ±3% of amplitude ±40mV
Repeatability:	Factor of 4 better than accuracy
Settling Time:	20ns (at the fastest transition time)
High Level:	-4.90V to +5.00V
Low Level:	-5.00V to +4.90V

Pulse Performance

Overshoot:	≤10% of amplitude ±20mV
Ringing:	≤10% of amplitude ±20mV
Preshoot:	≤5% of amplitude ±20mV

Operating Characteristics

Operating characteristics describe typical, non-warranted performance.

Timing Parameters

Duty Cycle Width and duty cycle are mutually exclusive

Range:	1% to 90%
Resolution:	1% Subject to width and period specifications

Inputs and Outputs

All inputs and outputs have BNC connectors on the front panel. Rear panel connectors are optional.

Main Outputs These are differential outputs.

Amplitude:	100mVp-p to 5Vp-p into 50Ω For pulse widths less than settling time, the amplitude may decrease by 10% of the programmed value.
Offset:	-4.95V to 4.95V into 50Ω
Source Impedance:	50Ω ±1Ω
Maximum External Voltage:	±5V
Short Circuit Current (I_{SC}):	-200mA ≤ I_{SC} ≤ +200mA
Skew:	The skew between differential outputs of the same channel <100ps

External Input This input is used in trigger, gate, burst, and external width operating modes.

Trigger slopes can be selected positive or negative.

Input Impedance:	50Ω ±2.5Ω
Threshold:	-5V to +5V
Resolution:	100mV
Maximum Input Voltage:	±10V
Input Transition:	<50ns
Input Frequency:	dc to 300MHz
Minimum Pulse Width:	1.5ns
Input Sensitivity:	≥300mVp-p

Trigger Output

Levels: High at 2.4V, low at 0.3V into 50Ω

Trigger Pulse Width:

Period	Pulse Width
3.33ns to 99.9ns	50% of Period
100ns to 999ns	95% of Period
1.00μs to 9.99μs	99.5% of Period
10.0μs to 99.9ms	99.95% of Period

Transition Times:	<1ns
Source Impedance:	50Ω ±2.5Ω
Delay:	From external input to trigger output In trigger and external width operating mode: 16ns In Gate and burst operating mode: 18.5ns
Max/Min External Voltage:	+7/-2V

Trigger Modes	Manual:	Simulates an external input signal.
	1 Pulse:	In trigger gate and burst operating mode one pulse or double pulse is generated.
	Auto:	Continuous pulse stream
	Trigger:	Each active input transition generates a single output pulse or double pulse
	Gate:	External signal enables period generator. The first output pulse is synchronous with active edge. The last pulse is always completed. The width and period of the first pulse may deviate 10% from subsequent pulses.
	External Burst:	Each active input transition generates a preprogrammed number of pulses (1 to 9999). The minimum burst period is 5ns. The width and period of the first pulse may deviate 10% from subsequent pulses.
	External Width:	Pulse recovery, the external edges toggle the output. Output levels and transition times can be selected.

Output Capabilities

Limit	The maximum high and low levels into 50Ω can be limited to protect the device under test.
Complement	Normal or complemented outputs can be selected.
Disable	Relays are used to connect or disconnect the outputs.
Set	This function will set the parameters to fixed ratio relative to period. (Delay=0ns; width=50% of period; transitions - 10% of period, limited to 1ns; period, high level and low level = current values).

Additional Features

HP-IB capabilities

All modes and parameters are programmable , downloadable and uploadable. ASCII and binary formats are supported.

HP-IB Interface Code: SH1, AH1,T6, TE0, L4, LE0, SR1, RL1, PP0, DC1, DT1, C0.

Non-Volatile Memory

Current settings are saved on power-down. Additionally, 19 complete set-ups can be stored.

General Environmental

Storage Temperature

-40°C to +65°C

Operating Temperature

0°C to 55°C

Humidity

(0°C to 40°C):95% R.H.

Power

100/200/220/240 Vrms, ±10%
250VA max.
50-60Hz

Weight

Net: 20kg (44.4lb)
Shipping: 28kg (62.2lb)

Dimensions

(H × W × D): 145mm × 426mm × 525mm (5.70in × 16.75 × 20.65in.)

Recalibration Period:

1 year recommended.

HP 8131A

Specifications

Specifications describe the instruments warranted performance. Non-warranted values are described as "typical".

All specifications apply after a 30 minute warm-up phase with 50Ω load resistance at all outputs, and are valid at ambient temperatures in the range 0°C to 55°C.

Timing Parameters

Common Specification:	Resolution:	3 digits, best case: 10ps.
	Repeatability:	Factor of 4 better than accuracy.
	RMS-Jitter:	0.025% of programmed value + 15ps (0.05% of programmed value +15ps for the range from 10ns to 100ns)
Period	Range:	2ns to 99.9ms
	Accuracy:	±5% of programmed value ±100ps

Delay This value is measured between the trigger output at TRIG OUTPUT and the pulse at OUTPUT or $\overline{\text{OUTPUT}}$.

Fixed Delay: 20ns
Variable Range: 0ns to 99.9ms (See Table 1-1 for maximum)
Accuracy: ±5% if programmed value ±1.5ns.

Double Pulse Range: 2ns to 99.9ms (see Table 1-2 for maximum)
Accuracy: ±5% of programmed value ±250ps

Double Pulse: Maximum Values

PERiods (ns)	Double Pulse
2.00 ... 4.99	n/a
5.00 ... 9.99	50% of PER**
≥10.0	(90% of PER)-4ns

**PERiod<5.72ns: Double Pulse <50% of PER

Width Range: 500ps to 99.9ms
Accuracy: ±5% of programmed value ±250ps.

Width and Delay: Maximum Values

PERiod (ns)	Width	Delay
2.00	500ps or 1ns	0ns
2.01 ... 2.99	50% of PER*	(50% of PER)-1ns
3.00 ... 4.99	50% of PER	(50% of PER)-1ns
5.00 ... 19.99	70% of PER	(70% of PER)-1ns
≥20.0	90% of PER	(90% of PER)-1ns

*Width <1ns: maximum width is (50% of PER)-0.5ns

Transition Times Range: 10% to 90% of amplitude: <200ps, 300mV to 3V range, PER≤1μs
20% to 80% of amplitude: <200ps, 100mV to 5V range

Output Levels

Common Specifications:
Resolution: 3 Digits, best case: 10mV.
Level Accuracy: ±1% of programmed value
±3% of amplitude ±40mV
Repeatability: Factor of 4 better than accuracy
Settling Time: 10ns (typical)
High Level -4.90V to +5.00V
Low Level -5.00V to +4.90V

Pulse Performance	Overshoot:	<15% of amplitude ±20mV
	Ringing:	<15% of amplitude ±20mV
	Reflections:	<10% at 1GHz

Operating Characteristics

Operating characteristics describe typical, non-warranted performance.

Differential Outputs

Duty Cycle	Range:	1% to 99%
	Resolution:	1%
	Amplitude:	100mVp-p to 5Vp-p into 50Ω
		The output levels double when the output drives into an open circuit
		The outputs are disabled if the output voltage >±6.5V
	Offset:	-4.95V to 4.95V into 50Ω
	Source Impedance:	50Ω ±1%
	Skew:	The skew between differential outputs of the same channel <100ps

Trigger Output

	Levels:	High at 0.0V, low at -0.6V
	Impedance:	50Ω±10%
	Delay:	From external input to trigger output 16ns
	External Voltage:	±5V Maximum

External Input

Trigger, Gate, Burst, and External Width Operating Modes.	Input Impedance:	50Ω ±5%
	Threshold:	-5V to +5V
	Resolution:	100mV
	Maximum Input Voltage:	±10V
	Input Transition:	<50ns
	Input Frequency:	dc to 500MHz
	Minimum Pulse Width:	1ns
	Input Sensitivity:	≥300mVp-p
Transducer Operating Mode	Input Impedance:	50Ω±5%
	Input Transition:	<50ns
	Input Frequency:	10MHz to 1GHz
	Input Sensitivity:	≥600mVp-p

Additional Features

HP-IB capabilities

HP-IB conforms to IEEE standard 488.1-1987, Digital Interface for Programmabel Information.

HP-IB Interface Code:

IEEE Std. 488 interface function subsets: SH1, AH1,T6, L4, SR1, RL1, PP0, DC1, DT1, C0.

For information regarding interface codes, formats, protocols and common commands, use IEEE Standard 488.2-1987, Codes, Formats, Protocols, and Common Commands as a quide. No claim of conformance is made.

Programming Times

Code	Binary				ASCII*		
	upload	download of a complete parameter set			download of parameters		
					one	two	three
HP 8131A Version	transfer	transfer	implementation	total	transfer+implementation		
1 Channel	110	30	140	170	<60	<90	<110
2 Channel	110	30	190	220	-	-	-

All times in milliseconds
*Add 25ms for "enable output" statements

Battery

Memory is supported for 7 years

General Environmental

Storage Temperature: -40°C to +65°C

Operating Temperature: 0°C to 55°C

Humidity: (0°C to 40°C):95% R.H.

Power: 100/120//220/240Vrms±10%
250VA max.
48-66Hz
Single Phase

Weight

Net: 20kg (44.4lb)
Shipping: 28kg (62.2lb)

Dimensions

(H × W × D): 145mm × 426mm × 525mm (5.70in × 16.75 × 20.65in.)

Recalibration Period:

1 year recommended.

2

Installation

Safety Considerations

The HP 8130A/HP 8131A is a Safety Class 1 instrument (instrument with an exposed metal chassis that is directly connected to earth via the power supply cable).

Before commencing work on the HP 8130A/HP 8131A, the instrument and this manual, including the red safety page, should be reviewed for safety markings and instructions. These must then be followed to ensure safe operation and to maintain the instrument in a safe condition.

Power is present in some of the HP 8130A/HP 8131A circuits whenever the instrument is connected to the AC power source.

To disconnect from the line power, disconnect the power cord either at the rear power-inlet or at the AC line-power source (receptacle). One of these must be accessible at all times. If the instrument is installed in a cabinet, it must be disconnected from the line power by means of the systems line-power switch.

Initial Inspection

Inspect the shipping container for damage. If the container or cushioning is damaged, it should be kept until the contents of the shipment have been checked for completeness and the instrument has been verified both mechanically and electrically.

Procedures for checking the operation of the instrument are given in the Performance Tests. If the instrument package contents are incomplete, mechanical damage or defect is apparent, or if an instrument does not pass the operator checks, notify the nearest Hewlett-Packard office. Keep the shipping materials for inspection by the carrier. The HP office will arrange for repair or replacement without awaiting settlement.

Warning **To avoid hazardous electrical shock, do not perform electrical tests when there are signs of shipping damage to any portion of the outer enclosure (covers, panels, etc.).**

Power Requirements

Caution

Before applying AC line power to the HP 8130A/HP 8131A, ensure that:

- the voltage selector on the HP 8130A/HP 8131A's rear panel is correctly set
- the correct line fuse is installed.

Procedures for changing the line voltage selector and fuse are contained in the following section "Line Voltage Selection".

The HP 8130A/HP 8131A can operate from any single-phase AC power source supplying 100 V, 120 V, 220 V or 240 V in the frequency range from 50 to 60 Hz. The maximum power consumption is 250 VA with all options installed.

Table 2-1. Line Voltage Ranges

Selector Voltage	AC Voltage Range
100	90 – 110 V
120	108 – 132 V
220	198 – 242 V
240	216 – 264 V

Line Voltage Selection

The line voltage selector is set at the factory to correspond to the most commonly used line voltage of the country of destination. The switch is combined with the power line voltage receptacle on the rear panel. Refer to the table below for the line voltage ranges and their corresponding fuse.

Table 2-2. Line Voltage and Fuse Selection

Line Voltage	Fuse Type	HP Part Number
100 V / 120 V	T 3A, 250 V	2110-0029
220 V / 240 V	T 1.5A, 250 V	2110-0304

To change the line voltage and fuse:

1. Switch OFF and remove the power cord.
2. Insert a screwdriver into the recess at the top of the assembly (see Figure 2-1) and "flip" cover down.
3. To change the voltage setting, the selector must be removed and then replaced with the new setting value displayed.
4. If necessary, change the fuse in accordance with the new voltage setting.

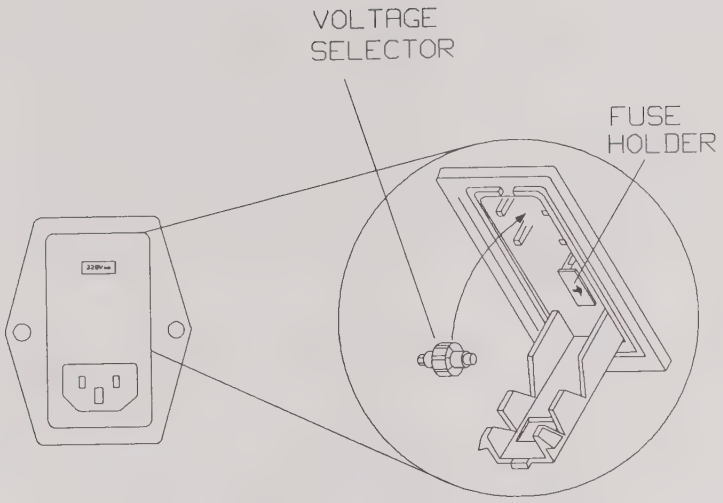

Figure 2-1. Line Voltage Switch Assembly

Power Cable

In accordance with international safety standards, this instrument is equipped with a three-wire power cable. When connected to an appropriate AC power receptacle, this cable grounds the instrument cabinet. The type of power cable shipped with each instrument depends on the country of destination. Refer to Figure 2-2 for the part numbers of available power cables.

Warning

To avoid the possibility of injury or death, the following precautions must be followed before the instrument is switched on.

- **If this instrument is to be energized via an autotransformer for voltage reduction, ensure that the Common terminal is connected to the grounded pole of the power source.**
- **The power cable plug shall only be inserted into a socket outlet provided with a protective ground contact. The protective action must not be negated by the use of an extension cord without a protective conductor.**
- **Before switching on the instrument, the protective ground terminal of the instrument must be connected to a protective conductor. This is ensured by using the power cord which is supplied with the instrument.**
- **Intentional interruption of the protective ground connection is prohibited.**

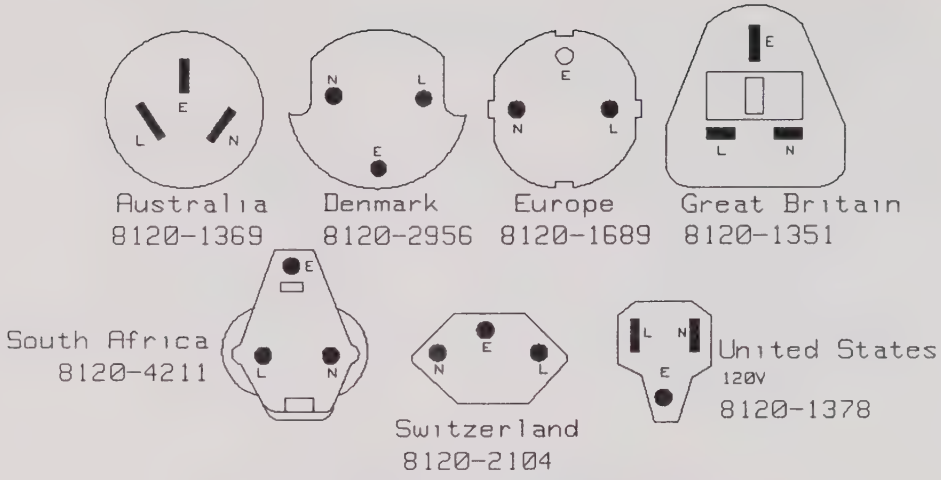

Figure 2-2. Power Cables - Plug Identification

The following work should be carried out by a qualified electrician - all local electrical codes being strictly observed. If the plug on the cable does not fit the power outlet, or the cable is to be attached to a terminal block, cut the cable at the plug end and re-wire it.

The color coding used in the cable will depend on the cable supplied. If a new plug is to be connected, it should meet local safety requirements and include the following features:

- Adequate load-carrying capacity (see table of specifications).
- Ground connection.
- Cable clamp.

Operating Environment

The following summarizes the HP 8130A/HP 8131A operating environment ranges. In order for the HP 8130A/HP 8131A to meet specifications, the operating environment must be within these limits.

Warning **The HP 8130A/HP 8131A is not designed for outdoor use, or in conditions that could cause moisture to enter the HP 8130A/HP 8131A.**

Temperature

The HP 8130A/HP 8131A may be operated in temperatures from 0 °C to 55 °C.

Humidity

The HP 8130A/HP 8131A may be operated in environments with humidity up to 95% (0 °C to +40 °C). However, the HP 8130A/HP 8131A should be protected from temperatures or temperature changes which could cause condensation within the instrument.

Instrument Cooling

The HP 8130A/HP 8131A is equipped with a cooling fan mounted inside the rear panel. The instrument should be mounted so that air can freely circulate through it. When operating the HP 8130A/HP 8131A, choose a location that provides at least 75 mm (3 inches) of clearance at the rear, and at least 25 mm (1 inch) of clearance at each side. Failure to provide adequate air clearance will result in excessive internal temperature, thus reducing instrument reliability.

HP-IB Interface

Networks

The network may be:

- A star network
- A linear network
- A combination star and linear network.

Limitations:

- The maximum cable length per device is 2 m
- The total cable length must not exceed 20 m
- No more than 15 devices may be interconnected on one bus.

Caution

It is recommended that no more than three connectors be stacked one on top of the other.

Hand tighten the connector lock screws. Do not use a screwdriver.

Cables and Adapters

The HP-IB connector is compatible with the connectors on the following cables and adapter.

- HP-IB Cable, 10833A, 1 m (3.3 ft.)
- HP-IB Cable, 10833B, 2 m (6.6 ft.)
- HP-IB Cable, 10833C, 4 m (13.2 ft.)
- HP-IB Cable, 10833D, 0.5 m (1.6 ft.)
- HP-IB Adapter, 10834A, 2.3 cm extender.

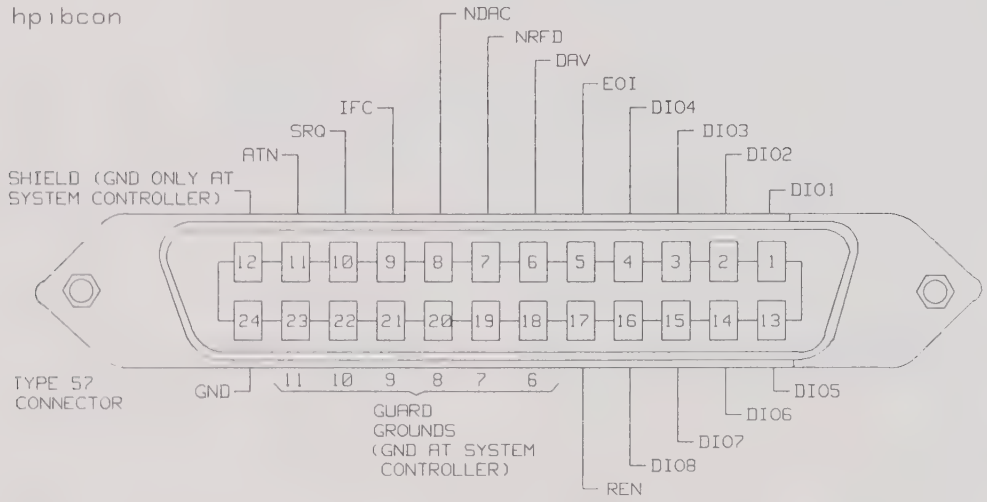

Figure 2-3. HP-IB Connector

Connector Lock Screw Compatibility

Caution

HP products are currently delivered equipped with connectors having ISO metric-threaded lock screws and stud mounts (ISO M3.5x0.6), which are black in color.

Earlier connectors may have lock screws and stud mounts with English-threaded lock screws and stud mounts (6-32 UNC) which have a shiny nickel finish.

Removal and Replacement Instructions

The HP 8130A/HP 8131A is of modular construction, which allows removal and replacement of major assemblies with minimum disturbance to other units. Instructions are detailed below for each subassembly.

Note After replacement of the output board and/or timing board, carry out the adjustment procedures decribed in Chapter 3 of this manual.

Electrostatic sensitive devices are fitted to the circuit boards within the HP 8130A/HP 8131A. Ensure that standard precautions are taken to prevent static electricity discharge.

Tools required

The following tools are required for dismantling the HP 8130A/HP 8131A Pulse Generator.

Table 2-3.

Item	Part Number	Usage
Torque wrench 5/16inch 5lb-inch/56N-cm	8710-1582	SMA connectors
Screwdriver medium size, cruciform		Cover and fixing screws
Screwdriver small size, cruciform		Board fixing screws
Screwdriver small (jewelers), cruciform		Switch operating lever SMA relay removal
Screwdriver small flat		Switch operating lever (power supply only)
Soldering iron and fluxed solder		
Non-setting sealing compound		Mains switch assy.

Note The part identification codes referred to in these procedures, are compatible with those contained in Chapter 5 of this manual *Replaceable Parts*.

Note

The part identification codes referred to in these procedures, are compatible with those contained in Chapter 5 of this manual *Replaceable Parts*.

Installation of Output Board

1. With the HP 8130A/HP 8131A switched OFF, disconnect the power cord
2. Remove the following:
   a. The four rear frame feet
   b. The cover top cabinet MP8 - one screw center rear, then slide cover to rear
   c. The left cover side (with the strap handle) - two screws each end of handle, then slide cover to rear
   d. The cover top MP7 - screws round the periphery (counter sunk on handle side rail)
   e. The cover top card cage MP6 - fourteen screws around periphery
   f. The two board keepers at the rear, by twisting them inwards and set them aside for re-fitting.
3. Note the color coding of the two SMA cables connected to the large SMD board (HP 8130A) or transducer board (HP 8131A) at the front end of the output board (to aid correct replacement).
4. Using the torque wrench, disconnect these two small SMA cables connected to the SMD board .
5. Free the two other screened cables from their fastener clips on the output board. Do not disconnect them unless the output board is to be replaced.
6. Slide the output board rearward to disengage it from the motherboard.
7. Fold the output board over the front of the instrument.
8. Place it in front of the instrument and protect the front frame and board against damage with a sheet of paper.
9. If option 020 is fitted, repeat steps 3 to 8 for the channel 1 output board located below the channel 2 output board.
10. Fit the exchange output board.
11. Reconnect SMA cables to the board (correct colors!).
12. Carry out adjustment procedures for the board(s) as detailed in Chapter 3 of this manual.
13. Switch OFF and disconnect the HP 8130A/HP 8131A.
14. Ensure that the output board is firmly engaged in the motherboard connector.
15. Refit the board keepers:
    a. Insert small tab end into the hole at bottom rear of the card cage with straight edge of keeper facing towards the nearest side of the instrument.
    b. Twist the keeper so that its straight edge is towards the rear of the instrument and the keeper is upright, with board resting on the support cutout.
16. Fit top cover top card cage MP6 with the right hand edge under the card cage side lips. The earthing fingers resting against the left hand side of the card cage, and with both board keepers engaged correctly in their slots at the rear of the cover.

Caution Take care not to trap the CPU Board ribbon cable under the cover.

17. Fit ALL the cover screws.
18. Fit the cover top MP7 and the screwws arond the edge.
19. Engage the bottom of the left (Handle side) cover over the flange of the bottom cover and slide the cover into position.
20. Fit the handle using the two counter sunk screws, which also secure the cover.
21. Fit top cover MP8.

Installation of SMA Relays

To replace a SMA relay on an output board, proceed as follows:

1. Dismantle the HP 8130A/HP 8131A and remove the output board(s) as detailed in the Output Board Installation instructions above.

Note The output board does not need to be removed in order to fit a new relay, but if option 020 is fitted, the upper output board must be removed to gain access to channel 1 board.

2. Using the torque wrench:
   a. disconnect the screened cable from the relay.
   b. slacken off the SMA securing collett from the relay center pole earth connector and make sure it is completely free from the connector threads. Do not attempt to withdraw the earth connector from the relay center pole.

Caution To avoid damage to the board tracks, be careful not to apply any side pressure to this center connector.

3. Unsolder the relay coil wires from the tags on the relay casing.
4. Using the jewelers screwdriver, detach the relay from the board.

To fit a new relay proceed as follows:

1. **When tightening SMA connectors, always use the torque wrench.**
2. Remove the 50 Ω load from the discarded relay and fit it to the normally open contact of the replacement relay.
3. Place the relay on the board checking that the coil connector tags are adjacent to the connecting wires (Only the right hand relay has the label uppermost).
4. Lightly engage (one half turn) the center connector collett.
5. Fit the two fixing screws but do not finally tighten.

6. Tighten the collett, then tighten the fixing screws carefully.

Caution

Do not over tighten - positioning torque exercised by the solid earth conductor may mask the "feel" of the fixing screws.

7. Reconnect the coil energizing wires. Ensure that the positive coil wire (+ on board tracking) connects to the upper tag.
8. Carry out checks as detailed in Chapter 3.
9. Re-assemble other instrument components and covers by reversing the Output Board Installation procedure .

Installation of Timing board

Caution

HP 8131A Only

As a result of Hewlett-Packard's policy of continued improvement of products, in rare cases, there may be incompatibility between a replacement Timing Board and other boards in your instrument. Make the following checks on the CPU board in the instrument, before installing an exchange Timing Board:

- Integrated Circuits (ROM) U204/U205 should bear a label 08131-13703/13704 Rev 1.3.
- If they are labeled Rev 1.1 or 1.2, then you will need to replace them with Rev 1.3 ROMs (part numbers as above) as well as the Timing Board.
- If they are labeled 08130-13705/13706 Rev 1.4, contact the factory.
  The manufacturing factory to contact is:
  Hewlett-Packard GmbH,
  Boeblingen Instruments Division,
  Herrenberger Strasse 130,
  D-7030 Boeblingen,
  Federal Republic of Germany

To replace a timing board, proceed as follows:

1. Dismantle the HP 8130A/HP 8131A and remove the output board(s) as detailed in the Output Board Installation instructions above.
2. Remove the timing board from the motherboard connector and fit a replacement.
3. Refit and connect the output board(s).
4. Temporarily replace the instrument top cover MP7.
5. Carry out adjustment procedures for the output board(s), as detailed in Chapter 3 of this manual.
6. Reassemble other instrument components and covers by reversing the Output Board Installation procedure.

Installation of CPU Board

To replace a CPU board, proceed as follows:

1. Switch OFF the HP 8130A/HP 8131A and disconnect the power cord
2. Remove the following:
   a. The four rear frame feet
   b. The cover top cabinet MP8 - one screw center rear, then slide cover to rear
   c. The left cover side (with the strap handle) - two screws each end of handle, then slide cover to rear
   d. The cover top MP7 - screws round the periphery (counter sunk on handle side rail).
3. Disconnect the two pin fan supply lead (lift centre clip) and the ribbon cable (swing end levers outwards) from the CPU board.
4. Remove six long screws with pillars which attach the CPU board to the power supply unit.
5. Slide the CPU board rearward to disengage it from the motherboard.
6. There are no adjustments to be made after replacement of a CPU board.

Installation of Power Supply Unit

First remove and set aside the CPU board following the above instructions and then proceed as follows:

1. Remove six screws (two at each end and two center) and lift away the rear panel.
2. Make sure the instrument ON/OFF switch is set to OFF (protruding from the front panel).
3. Insert the small flat screwdriver through the elongated slot in the side frame adjacent to the ON/OFF switch assembly.
4. The switch operating rod is a tight push fit over the switch lever and may have non-setting adhesive applied.

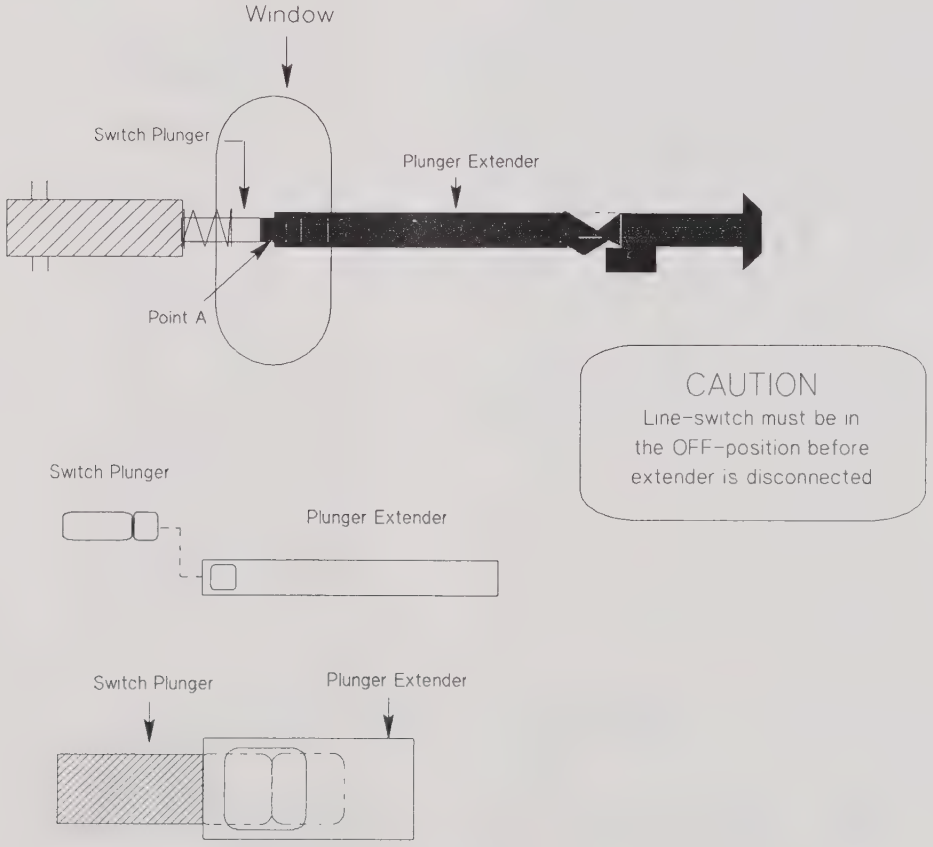

Figure 2-4.

5. Using the flat screwdriver, carefully prise the switch operating rod forwards, free from the switch, and withdraw it through the front cover.
6. Remove eleven power supply unit fixing screws from the side frame.
7. Slide the power supply unit rearward to disengage it from the motherboard.
8. Supporting the rear end of the power supply, carefully lift the front end upwards and forwards to remove the unit clear from the instrument main chassis. The power supply cannot be removed through the rear of the instrument.

Caution

When re-fitting the power supply unit and when mating up with the motherboard connector, be careful not to damage the earthing strip fingers on the top rear of the power supply.

Note

Ensure that the switch operating rod is securely re-fitted onto the switch lever. Press the switch ON/OFF button several times to ensure correct and secure operation of the switch mechanism, then apply a little non-setting sealant to the junction.

Installation of Motherboard

To gain access to the motherboard, or to remove and replace it, ALL circuit boards and the power supply unit must first be removed using the procedures detailed above.

Remove the motherboard as follows:

1. Disconnect the keyboard ribbon cable.
2. Remove eight securing screws and lift the motherboard from its mounting pillars.

Note

Do not forget to connect the keyboard ribbon cable before re-fitting all other subassemblies.

Installation of Keyboard Assembly

Individual components such as the seven segment displays and key switches may be removed and replaced if faulty, instead of replacing the complete keyboard. However the keyboard must still be removed for access as follows:

1. Switch OFF the HP 8130A/HP 8131A and disconnect the power cord.
2. Turn the instrument onto its right hand side and remove six keyboard fixing screws from the bottom rail. Working down from the top, the screws to be removed are numbered 1, 4, 8, 11 and 14.
3. Turn the instrument back to a normal upright operational position.
4. Prise the thin plastic trim strip from the front top rail to expose fixing screws.
5. Working from the left, screws numbered 2, 5, 8, 11 and 14 must be removed.
6. The keyboard can now be pulled away from the front of the instrument for access .

Parts Ordering

A list of replaceable parts is given in Chapter 5 of this manual, together with ordering information.

Storage and Shipment

The instrument and its separate subassemblies can be stored or shipped at temperatures between −40 °C and +75 °C. The instrument should be protected from temperature extremes which may cause condensation within it.

Return Shipping an Instrument to HP

If the instrument or subassembly is to be shipped to a Hewlett-Packard Sales/Service Office (see Appendix A), attach a tag showing owner, return address, model number and full serial number and the type of service required.

The original shipping carton and packing material may be used again, but the Hewlett-Packard Sales/Service Office will also provide information and recommendations on materials to be used if the original packing is no longer available or reusable. General instructions for repacking are as follows:

Packing

1. Wrap instrument in heavy paper or plastic.
2. Use strong shipping container. A double wall carton is adequate.
3. Use enough shock-absorbing material (3 to 4 inch layer) around all sides of the instrument to provide a firm cushion and prevent movement inside container.
4. Seal shipping container securely.
5. Mark shipping container **FRAGILE** to encourage careful handling.
6. In any correspondence, refer to item by model number and serial number.

Returning a Circuit Board to HP

If the instrument or subassembly is to be shipped to a Hewlett- Packard Sales/Service Office (see Appendix A), attach a tag showing owner, return address, model number and full serial number and the type of service required.

Packing a board

A circuit board must be carefully packed as follows:

1. The board should be first placed in a ESD protective envelope and then into a padded envelope suitable marked and identified.
2. Place the envelope in a cardboard container with further shock- absorbing material
3. Mark shipping container **FRAGILE** to encourage careful handling.
4. In any correspondence, refer to item by type number and serial number.

3

Adjustments

Adjustments to the HP 8130A Output Board

The Output Board(s) must be checked and adjusted after replacement or after replacement of a timing board.

To check the Output Board setting, proceed as follows:

1. Switch the instrument ON and allow to warm up for 30 minutes.
2. Set the HP 8130A:

Control	Setting	Chan 1	Chan 2
TIMING	PERIOD	10 ns	
	DEL	0.0 ns	0.0 ns
	WID	1.5 ns	1.5 ns
	LEAD	670 ps	670 ps
	TRA	670 ps	670 ps
OUTPUT	HIGH	+2 V	+2 V
	LOW	0 V	0 V
		NORM	NORM
		ENABLE	ENABLE

3. If channel 2 is fitted, commence adjustments for that channel's board.
4. Connect the HP 8130A TRIG OUTPUT via a cable assy-coax SMA (m- m) and APC 3.5 mm 20 dB attenuator (f-m), to the TRIG input of an HP 54121A oscilloscope.
5. Connect the HP 8130A Channel 2 OUT via a similar accessory to the Input 4 of the HP 54121A.
6. Setup HP 54121A Oscilloscope:
   a. press AUTOSCALE
   b. select the Display menu and set the Number of Averages to 16
   c. set DELAY so that one pulse is positioned in the center of the screen
   d. press MORE
   e. press the +width function.
7. With WID = 1.5 ns check the NORMal and COMPlement Outputs = 1.5 ns ±50 ps. For NORMal pulse press +width on the oscilloscope, for COMPlement pulse press −width.

8. If necessary, carefully adjust RV100 on the large SMD board to obtain the best compromise. The width of the COMPlement is typically 80-100 ps less than the NORMal signal.
9. Switch the HP 8130A OFF and remove the channel 2 board if fitted. Ignore the displayed ERROR 504!
10. Switch the HP 8130A back on and repeat the above procedure for the channel 1 OUT signal.

Note

For this test the channel 1 control keys are inactive: use the channel 2 control keys.

---

11. Set HP 8130A:
    a. PERIOD = 3 ns
    b. WID = 1.2 ns.
12. Connect the HP 8130A channel 1 OUT to the HP 54121A's TRIG IN.
13. Connect the HP 8130A TRIG OUTPUT to the HP 54121A's Input 4.
14. Check the trigger signal for a duty cycle of 50% ±4%.
15. If necessary carefully adjust RV400 on the large SMD board.
16. Change the HP 8130A's PERIOD from 4 ns to 5 ns and then, in steps, up to 9 ns. At each step check the duty cycle is 50%.
17. Reassemble the HP 8130A.
18. Carry out the functional checks on both channels.

Adjustments to the HP 8131A Output Board

The Output Board(s) must checked and adjusted after replacement or after a timing board has been replaced.

To check Output Board setting, proceed as follows:

1. Switch the instrument ON and allow to warm up for 30 minutes.
2. Set the HP 8131A:

Control	Setting	Chan 1	Chan 2
TIMING	PERIOD	20 ns	
	DEL	0.0 ns	0.0 ns
	WID	1 ns	1 ns
OUTPUT	AMPL	+5 V	+5 V
	OFFS	0 V	0 V
		ENABLE	ENABLE

3. If channel 2 is fitted, start adjustments with the board for that channel.
4. Connect the HP 8131A TRIG OUTPUT via a cable assy-coax SMA (m- m) and APC 3.5 mm 20 dB attenuator (f-m), to the TRIG input of an HP 54121A oscilloscope.
5. Connect the HP 8131A Channel 2 OUT via a similar accessory to the Input 4 of the HP 54121A.
6. Setup HP 54121A Oscilloscope:
   a. press AUTOSCALE
   b. select the Display menu and set the Number of Averages to 16
   c. set DELAY to approx 20 ns so that pulse will be positioned in the center of the screen
   d. select MORE and then select the channel to be measured (CH4)
   e. select Position FINE
   f. press MORE to obtain ± Width function
   g. select the Delta V menu and turn the voltage markers On
   h. set Preset Levels = 50-50% and press Auto Level Set
   i. select the Delta t menu and turn the time markers On
   j. set START ON EDGE = POS1 and STOP ON EDGE = NEG1.

Note Press the Precise Edge Find key for each Width test.

7. With WID = 1 ns check the NORMal and COMPlement Outputs to be 940 ps ±30 ps. For NORMal pulse press +width, for COMPlement pulse press −width.

8. If adjustment is necessary, carefully alter RV200 on the A18 Transducer Board, ensuring the width is set as close as possible to 960 ps. Turning RV200 clockwise increases width, counter clockwise reduces width.

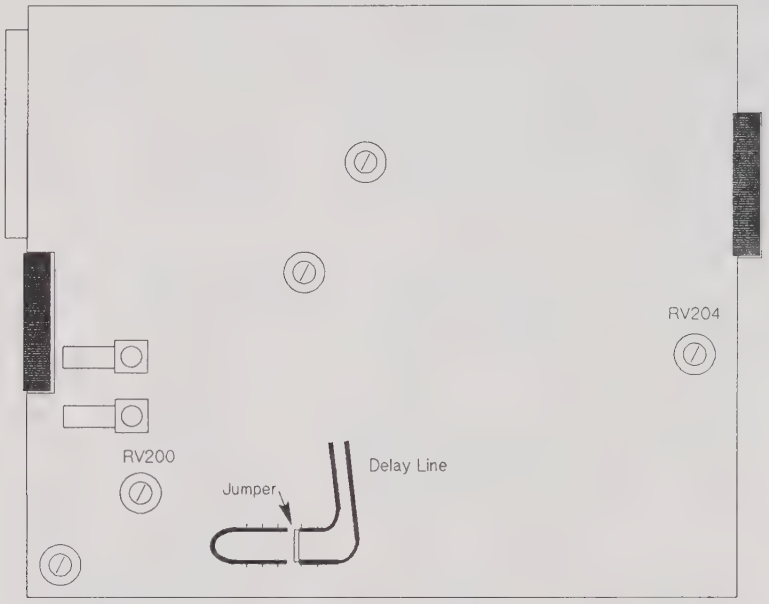

Figure 3-1. Transducer Board Layout

9. If the difference between NORM and COMP is greater than 40 ps, slightly adjust RV204 on the Transducer Board, A18.

Note

There is no *preferred* direction for this initial movement, so it is important to note the direction of adjustment. You can then decide direction of adjustment for a subsequent compensation if required.

10. Change the HP 8131A Width to 500 ps.
11. Check the pulse width in NORM/COMP for 510 ps ±30 ps.
12. If adjustment is necessary, carefully alter RV200 again on the A18 Transducer Board but use care, because it will have an effect on RV204 setting and vice-versa - see steps 8 and 9.
13. Repeat steps 7 to 12 to achieve the best compromise at WID = 1 ns and WID = 500 ps. i.e. adjust for a minimum difference when switching between NORMal and COMPlement outputs at WID = 500 ps.
14. If it is not possible to get the pulse width within 480 ps to 540 ps, the delay line on the A18 Transducer Board must be altered as follows:
    a. Change the position of the SMT jumper, desolder and reconnect at another marker on the delay line
    b. Delay line longer = smaller width
    c. Delay line shorter = greater width.

Note The delay line track should only be cut behind the jumper when setting is finalized.

15. Repeat steps 7 to 13.
16. At WID = 500 ps, switch between NORM and COMP.
17. Set HP 8131A:
    a. Period = 2 ns
    b. WID = 500 ps.
18. Using the Vernier keys, change WID to 300 ps ($\leq$ 500 ps).
19. Check in NORM/COMP for a stable output signal (no missing pulse or double pulse) with WID = $\leq$ 500 ps. If necessary repeat step 11 for a lower value.
20. Set HP 8131A:
    a. Period = 5 ns
    b. WID = 500 ps
    c. DOUB = 2 ns.
21. Using the Vernier keys, change PER to 10 ns.
22. Check in NORM/COMP for a stable output signal (no missing pulse).
23. Repeat the check with DOUB set to 2.14 ns.
24. If necessary repeat steps 1 to 23 (using the range $\pm$ 40 ps in steps 7 and 11.
25. Switch the HP 8131A OFF.
26. If option 020 is fitted, remove output board 2 to gain access to channel 1 board and fold it over the front of the instrument.
27. Switch ON the HP 8131A, ERROR 504 may be displayed, ignore it.
28. Repeat steps 1 to 24 for Chan 1 OUT.

Note For this test, the keys for channel 1 are not active. Use Channel 2 control keys.

29. Re-assemble the instrument.
30. Carry out functional checks on both channels in:
    a. AUTO operating mode
    b. EXT INPUT mode
    c. TRANSducer operating mode.

Adjustments to the HP 8130A and HP 8131A Timing Board

There are EEPROMs on the timing boards of the HP 8130A and the HP 8131A, containing the calibration factors for these boards. Calibration factors are measured by a special adjustment program during production. Further adjustment of these boards can only be carried out in the factory.

4

Performance Tests

Introduction

The performance tests verify the HP 8130A/HP 8131A's specified performance characteristics.

They are suitable for incoming inspection, preventative maintenance, troubleshooting, and final test.

Carry out the performance tests in the same sequence as they appear in the manual.

Note Recommended test equipment is listed in Table 4.1.

Safety

The HP 8130A/HP 8131A is a Safety Class 1 instrument. It has an exposed metal chassis that is directly connected to earth potential through the line power cord.

Before testing the instrument review:

1. The Safety Summary (red page)
2. The Instrument Reference Manuals
3. The instrument safety markings.

Test Record

A test record is located at the end of this chapter.

The test results are identified as *TR Entrys* in the performance tests and on the test record.

Recommended Test equipment

Other equipment can be used provided it meets the specifications of this equipment.

Table 4-1.

Type (Quantity)	Model	Specifications
1:1 Probe (1)	HP 10026A	100 V max, 1:1, 50 Ω.
10:1 Probe (1)	HP 10017A	300 V max, 10:1, 1 MΩ, 8 pF.
50 Ω feedthrough (1) termination	HP 10100C	50 Ω, 2 W, 1%.
50 Ω feedthrough (1) termination	See Figure 4-1.	50 Ω, 10 W, 0.1%.
Adapter, (1) BNC to Banana	HP 1251-2277	BNC(f) to dual banana plug, 50 Ω
Cable Assembly (5)	HP 8120-1839	50 Ω, 24 inches, coax, 2 BNC (m).
Counter (1)	HP 5335A/ HP 5370B	50 μHz to 50 MHz; 8 digit display; INPUT: 50 Ω/1 MΩ, X1/X10, AC/DC, separate/common; variable trigger level; TI/PERIOD/FREQUENCY.
Isolation Transformer (1)		Suitable for use with the variac.

Table 4-1. (continued)

Type (Quantity)	Model	Specifications
Multimeter (1)	HP 3478A/ HP 3456A	4 1/2 digit display VDC: 30 mV to 300 V; 30 to 35 readings/second; external trigger; input resistance: >10 MΩ
Oscilloscope (1) (Sampling)	HP 54121T	20 GHz
Sampling Oscilloscope Accessories		
Attenuator (3)	33340C	APC 3.5 mm (f-m), 20 dB
Adapter (2)	1250-1200	SMA (m) to BNC (f)
Cable (3)	8120-4948	SMA (m-m) coaxial
Adapter (1)	1250-1159	SMA (m-m)
Adapter (2)	1250-1700	SMA (f) to BNC (m)
Power Splitter (1)	11667B	APC 3.5 mm
Variac (1) (Variable AC Power Supply)		≥5 A, 0-300 VAC
Power Supply (1)	HP 6205A or HP 6237A	0-60 VDC, 0-3A.
Pulse Generator (1)	HP 8112A/ HP 8161A	1 Hz to 50 MHz; variable delay; variable width; variable pulseq; external trigger; output amplitude: > 5 V.
TEE (1)	HP 1250-0781	50 Ω, BNC(m)(f)(f).

Feedthrough Termination

This feedthrough must be used only where specified for DC voltage measurements.

The following figure provides a schematic and a parts list except for the case. The case must provide shielding and maintain grounding integrity.

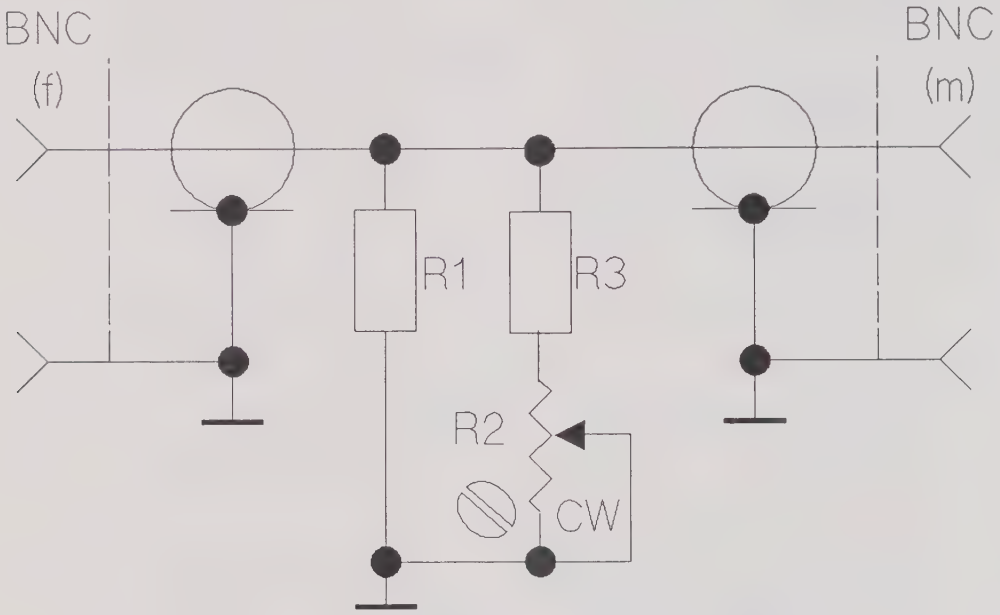

Figure 4-1. 50 Ω, 0.1%, 10 W Feedthrough Termination

R1 = 53.6 Ω, 1%, 10 W; HP Part Number: 0699-0146.

R2 = 200 Ω, 10%, 0.5 W, Variable trimmer; HP Part Number: 2100-3350.

R3 = 681 Ω, 1%, 0.5 W; HP Part Number: 0757-0816.

BNC (M): HP Part Number: 1250-0045.

BNC (F): HP Part Number: 1250-0083.

1. Period Test

Specifications

Range: 3.33 ns to 99.9 ms for HP 8130A; 2 ns to 99.9 ms for HP 8131A

Resolution: 3 digits (best case: 10 ps)

Accuracy: 5% of programmed value ±100 ps

rms Jitter: 10 ns to 100 ns range: 0.05% of programmed value +15 ps

all other ranges: 0.025% of programmed value +15 ps

Repeatability: Factor 4 better than accuracy

Equipment

1. Counter (HP 5335A/HP 5370B).
2. Cable, 50 Ω, BNC to BNC, coaxial (HP8120-1839).

Setup

1. Connect the HP 8130A/HP 8131A's OUTPUT 1/2 to the counter's channel A input (HP 5335A). FREQ input (HP 5370B).
2. Set the HP 8130A/HP 8131A:

		HP 8130A		HP 8131A	
CONTROL	SETTING	CHANNEL 1	CHANNEL 2	CHANNEL 1	CHANNEL 2
MODE	AUTO				
TIMING	PERIOD	3.33 ns		2.00 ns	
	DEL	0 ns	0 ns	0 ns	0 ns
	DCYC	50%	50%	50%	50%
	LEAD	1.00 ns	1.00 ns	—	—
	TRA	1.00 ns	1.00 ns	—	—
OUTPUT	HIGH	+1.5 V	+1.5 V	+1.5 V	+1.5 V
	LOW	−1.5 V	−1.5 V	−1.5 V	−1.5 V
		ENABLE	DISABLE	ENABLE	DISABLE

3. Set Counter:
   a. Function = PERIOD
   b. Channel A = 50 Ω
   c. Trigger Level = Preset

Procedure

Check the HP 8130A/HP 8131A period at the following settings:

Period	Acceptable Range	TR entry
3.33 ns*	3.06 ns to 3.56 ns	1-1 (HP 8130A)
2.00 ns	1.80 ns to 2.20 ns	1-1 (HP 8131A)
5.00 ns	4.65 ns to 5.35 ns	1-2
10.0 ns	9.4 ns to 10.6 ns	1-3
50.0 ns	47.4 ns to 52.6 ns	1-4
100 ns	94.9 ns to 105.1 ns	1-5
500 ns	474.9 ns to 525.1 ns	1-6
1.00 μs	949.9 ns to 1.05 μs	1-7
5.00 μs	4.75 μs to 5.25 μs	1-8
10.0 μs	9.5 μs to 10.5 μs	1-9
50.0 μs	47.5 μs to 52.5 μs	1-10
100 μs	95 μs to 105 μs	1-11
500 μs	475 μs to 525 μs	1-12
1.00 ms	950 μs to 1.05 ms	1-13
5.00 ms	4.75 ms to 5.25 ms	1-14
10.0 ms	9.5 ms to 10.5 ms	1-15
50.0 ms	47.5 ms to 52.5 ms	1-16
99.9 ms	94.9 ms to 104.9 ms	1-17

* To meet this specification it is acceptable to program the value to less than 3.33 ns.

2. Delay Test

This test consists of two parts:

1. Short Delay Test
2. Long Delay Test

Note Repeat the entire delay test procedure for the second channel, if installed.

The specifications and tests are for the 50% point of amplitude.

Specifications

Range:	0 ns to 99.9 ms
	Fixed Delay (Trigger Output to Main Output):
	18 ns for the HP 8130A; 20 ns (nominal) for the HP8131A
Maximum Delay	3.33 ns $\leq$ Period $<$ 4.99 ns: Max. Delay = (50% of Period) - 1.00 ns
(HP 8130A):	5.00 ns $\leq$ Period $<$ 19.9 ns: Max. Delay = (70% of Period) - 2.00 ns
	Period $\geq$ 20.0 ns: Max. Delay = (90% of Period) - 6.00 ns
Maximum Delay	
(HP 8131A):	Period $\geq$ 20.0 ns: Max. Delay = (90% of Period) - 6.00 ns
Accuracy:	5% of programmed value $\pm$1.5 ns
rms Jitter:	10 ns to 100 ns range: 0.05% of programmed value +15 ps
	All other ranges: 0.025% of programmed value +15 ps
Repeatability:	Factor 4 better than accuracy

Equipment

- Digitizing Oscilloscope with Accessory (HP 54121T)
- Pulse Generator (HP 8112A/HP 8161A)
- Counter (HP 5335A/ HP 5370B)
- Cable, 50 Ω, BNC to BNC, coaxial, 2 each (HP 8120-1839).

Delay Test, Part 1: Short Delay Test

Setup

1. Set Pulse Generator:

   PER = 500 ns

   WID = 100 ns

   HIL = 0.5 V

   LOL = −0.5 V

   Fixed Transition Time

2. Set the HP 8130A/HP 8131A:

		HP 8130A		HP 8131A	
CONTROL	SETTING	CHANNEL 1	CHANNEL 2	CHANNEL 1	CHANNEL 2
MODE	TRIG				
	Positive slope				
TIMING	DEL	0 ns	0 ns	0 ns	0 ns
	WIDTH	100 ns	10 ns	100 ns	10 ns
	LEAD	1.00 ns	1.00 ns	—	—
	TRA	1.00 ns	1.00 ns	—	—
OUTPUT	HIGH	+1.5 V	+1.5 V	+1.5 V	+1.5 V
	LOW	−1.5 V	−1.5 V	−1.5 V	−1.5 V
		ENABLE	DISABLE	ENABLE	DISABLE

3. Connect the Pulse Generator's Output via a 50 Ω feedthrough to the HP 8130A/HP 8131A's EXT INPUT.
4. Connect the HP 8130A/HP 8131A's TRIG OUTPUT via:

   a BNC(m) to SMA(f) adapter (HP 8130A only)

   an SMA(m-m) coaxial cable assembly

   an APC 3.5 mm 20 dB Attenuator (f-m)

   to the Input 3 of the HP 54121A.
5. Connect the HP 8130A/HP 8131A OUTPUT 1/2 via a second similar accessory assembly to Input 4 of the HP 54121A.
6. Connect the Pulse Generator's Trigger Output via a third similar accessory assembly to the TRIG input of the HP 54121A.

Procedure

1. Set the HP 54121T Oscilloscope:
   a. press AUTOSCALE
   b. set TIME/DIV = 20 ns/div
   c. select the Display menu and set the Screen function to Single; set the Number of Averages to 64
   d. select the delta V menu and turn the voltage markers On and assign marker 1 to channel 3 and marker 2 to channel 4
   e. set Preset Levels = 50-50% and press Auto Level Set
   f. select the delta t menu and turn the time markers On
   g. set START ON EDGE = POS1 and STOP ON EDGE = POS1.
   h. Press the Precise Edge Find key.
2. Press the Precise Edge Find key for each new Delay setting.
3. Check the HP 8130A/HP 8131A delay at the following settings:

Delay	Acceptable Range	TR entry
0.0 ns	fixed delay	2-1
10.0 ns	8.0 ns to 12.0 ns	2-2
20.0 ns	17.5 ns to 22.5 ns	2-3
50.0 ns	46.0 ns to 54.0 ns	2-4
80.0 ns	74.5 ns to 85.5 ns	2-5
99.9 ns	93.4 ns to 106.4 ns	2-6

   Record the value of the fixed delay, and subtract it from the other readings.
4. Step with the Vernier up keys from:
   a. 0 ps to 100 ps in 10 ps steps
   b. 100 ps to 1 ns in 100 ps steps
   c. 1 ns to 10 ns in 1 ns steps

   Check the function/variation on the oscilloscope.

Delay Test, Part 2: Long Delay Test

Setup

1. Set the HP 8130A/HP 8131A:

		HP 8130A		HP 8131A	
CONTROL	SETTING	CHANNEL 1	CHANNEL 2	CHANNEL 1	CHANNEL 2
MODE	AUTO				
TIMING	PERIOD	95 μs		95 μs	
	DEL	100 ns	0 ns	100 ns	10 ns
	WIDTH	100 ns	10 ns	100 ns	1 ns
	LEAD	1.00 ns	1.00 ns	—	–
	TRA	1.00 ns	1.00 ns	—	—
OUTPUT	HIGH	+1.5 V	+1.5 V	+1.5 V	+1.5 V
	LOW	−1.5 V	−1.5 V	−1.5 V	−1.5 V
		ENABLE	DISABLE	ENABLE	DISABLE

2. Set the counter:
   a. FUNCTION = TI A to B
   b. START = 50 Ω, POS (+) slope, DC, X1
   c. STOP = 50 Ω, POS (+) slope, DC, X1
   d. Gate Time = as necessary
   e. INPUT MODE = SEP (SEPARATE)
   f. START/STOP trigger levels = preset.
3. Connect the HP 8130A/HP 8131A TRIG OUTPUT to the counter's START input.
4. Connect the HP 8130A/HP 8131A OUTPUT 1/2 to the counter's STOP input.

Procedure

Check the HP 8130A/HP 8131A delay at the following Period and Delay settings:

Period	Delay	Acceptable Range	TR entry
*95.0 μs	100 ns	93.5 ns to 106.5 ns	2-7
*95.0 μs	500 ns	473.5 ns to 526.5 ns	2-8
*95.0 μs	999 ns	947.55 ns to 1.051 μs	2-9
99.9 ms	100 μs	95.00 μs to 105 μs	2-10
99.9 ms	1 ms	950.00 μs to 1.050 ms	2-11
99.9 ms	80 ms	76.00 ms to 84.000 ms	2-12

Note *Take the fixed delay into account.

3. Double Pulse Test

This test consists of two parts:

1. Short Double Pulse Test
2. Long Double Pulse Test

Note Repeat the entire double pulse test procedure for the second channel, if installed.

The specifications and tests are for the 50% point of amplitude.

Specifications

Range:	3.33 ns to 99.9 ms for HP 8130A; 2 ns to 9.99 ms for HP 8131A
Maximum Double Pulse:	Period < 7.1 ns: Max Double Pulse = n/a (HP 8130A only) 7.2 ns ≤ Period ≤ 9.99 ns: Max Double Pulse = 50% of Period (HP8130A only) Period ≥ 10.0 ns: (90% of Period) - 4.00 ns
Resolution:	3 digits (best case: 10 ps)
Accuracy:	5% of programmed value ±250 ps
rms Jitter:	10 ns to 100 ns range: 0.05% of programmed value +15 ps All other ranges: 0.025% of programmed value +15 ps
Repeatability:	Factor 4 better than accuracy

Equipment

- Digitizing Oscilloscope with Accessory (HP 54121T)
- Counter (HP 5335A/HP 5370B)
- Cable, 50 Ω, BNC to BNC, coaxial, 2 each (HP 8120-1839).

Double Pulse Test, Part 1: Short Double Pulse Test

Setup

1. Set the HP 8130A/HP 8131A:

		HP 8130A		HP 8131A	
CONTROL	SETTING	CHANNEL 1	CHANNEL 2	CHANNEL 1	CHANNEL 2
MODE	AUTO				
TIMING	PERIOD	200 ns		200 ns	
	DOUB	20 ns	2 ns	20 ns	2 ns
	WIDTH	10 ns	1.5 ns	10 ns	1.00 ns
	LEAD	1.00 ns	1.00 ns	—	—
	TRA	1.00 ns	1.00 ns	—	—
OUTPUT	HIGH	+1.5 V	+1.5 V	+1.5 V	+1.5 V
	LOW	−1.5 V	−1.5 V	−1.5 V	−1.5 V
		ENABLE	DISABLE	ENABLE	DISABLE

2. Connect the HP 8130A/HP 8131A's TRIG OUTPUT via:
   a. a BNC(m) to SMA(f) adapter (HP 8130A only)
   b. SMA(m-m) coaxial cable assembly
   c. an APC 3.5 mm 20 dB Attenuator (f-m)

   to the TRIG Input of the HP 54121A.
3. Connect the HP 8130A/HP 8131A OUTPUT 1/2 via a similar accessory assembly to the Input 4 of the HP 54121A.

Procedure

1. Set the HP 54121T Oscilloscope:
   a. press AUTOSCALE
   b. select the Display menu and set the Number of Averages to 64
   c. select the delta V menu and turn the voltage markers On
   d. set Preset Levels = 50-50% and press Auto Level Set
   e. select the delta t menu and turn the time markers On
   f. set START ON EDGE = POS1 and STOP ON EDGE = POS2.
2. Press the Precise Edge Find key for each new Double setting.

3. Check the HP 8130A/HP 8131A double pulse delay at the following settings:

Double	Acceptable Range	TR entry
20.0 ns	18.75 ns to 21.25 ns	3-1
50.0 ns	47.25 ns to 52.75 ns	3-2
80.0 ns	75.75 ns to 84.25 ns	3-3
99.9 ns	94.65 ns to 105.15 ns	3-4

4. Change the HP 8130A Width to 1.5 ns, and Double to 3.33 ns.
5. Change the HP 8131A Width to 1 ns, and Double to 2 ns.
6. Check the HP 8130A/HP 8131A double pulse delay at the following settings:

Double	Acceptable Range	TR entry
3.33 ns	2.51 ns to 3.75 ns	3-5 (HP 8130A only)
2.00 ns	1.65 ns to 2.35 ns	3-5 (HP 8131A only)
5.0 ns	4.50 ns to 5.50 ns	3-6
10.0 ns	9.25 ns to 10.75 ns	3-7

Double Pulse Test, Part 2: Long Double Pulse Test

Setup

1. Set the HP 8130A/HP 8131A:

		HP 8130A		HP 8131A	
CONTROL	SETTING	CHANNEL 1	CHANNEL 2	CHANNEL 1	CHANNEL 2
MODE	AUTO				
TIMING	PERIOD	95 μs		95 μs	
	DOUB	200 ns	2 ns	200 ns	2 ns
	WIDTH	100 ns	1.5 ns	100 ns	1 ns
	LEAD	1.00 ns	1.00 ns	—	—
	TRA	1.00 ns	1.00 ns	—	—
OUTPUT	HIGH	+1.5 V	+1.5 V	+1.5 V	+1.5 V
	LOW	−1.5 V	−1.5 V	−1.5 V	−1.5 V
		ENABLE	DISABLE	ENABLE	DISABLE

2. Set the counter:

   FUNCTION = TI A to B

   START = 50 Ω, POS (+) slope, DC, X1

   STOP = 50 Ω, POS (+) slope, DC, X1

   Gate Time = as necessary

   INPUT MODE = COM

   START/STOP trigger levels = Preset

3. Connect the HP 8130A/HP 8131A OUTPUT 1/2 to the counter's START input.

Procedure

Check the HP 8130A/HP 8131A double pulse delay at the following Period and Double settings:

Period	Double	Acceptable Range	TR entry
95.0 μs	200 ns	189.75 ns to 210.25 ns	3-8
95.0 μs	1 μs	950.00 ns to 1.05 μs	3-9
95.0 μs	10 μs	9.50 μs to 10.5 μs	3-10
99.9 ms	100 μs	95 μs to 105.00 μs	3-11
99.9 ms	1 ms	950 μs to 1.05 ms	3-12
99.9 ms	10 ms	9.5 ms to 10.50 ms	3-13
99.9 ms	80 ms	76 ms to 84.00 ms	3-14

4. Width Test

This test consists of two parts.

1. Short Width Test
2. Long Width Test

Note Repeat the entire width test procedure for the second channel, if installed.

The specifications and tests are for the 50% point of amplitude.

Specifications

Range:	1.5 ns to 99.9 ms for the HP 8130A; 500 ps to 99.9 ms for the HP 8131A
Maximum Width:	3.33 ns $\leq$ Period $\leq$ 4.99 ns: Max Width = 50% of period (HP 8130A only)
	5.00 $\leq$ Period $\leq$ 19.9: Max Width = (70% of Period) - 1 ns (HP8130A only)
	Period $\geq$ 20.0 ns: (90% of Period) - 5.00 ns
Resolution:	3 digits (best case: 10 ps)
Accuracy:	5% of programmed value $\pm$250 ps
rms Jitter:	10 ns to 100 ns range: 0.05% of programmed value +15 ps
	All other ranges: 0.025% of programmed value +15 ps
Repeatability:	Factor 4 better than accuracy

Equipment

- Digitizing Oscilloscope with Accessory (HP 54121T)
- Counter (HP 5335A/HP 5370B)
- Cable, 50 Ω, BNC to BNC, coaxial, 2 each (HP 8120-1839)

Width Test, Part 1: Short Width Test

Setup

1. Set the HP 8130A/HP 8131A:

		HP 8130A		HP 8131A	
CONTROL	SETTING	CHANNEL 1	CHANNEL 2	CHANNEL 1	CHANNEL 2
MODE	AUTO				
TIMING	PERIOD	200 ns		200 ns	
	DEL	0 ns	0 ns	0 ns	0 ns
	WIDTH	10 ns	15 ns	10 ns	15 ns
	LEAD	1.00 ns	1.00 ns	—	—
	TRA	1.00 ns	1.00 ns	—	—
OUTPUT	HIGH	+1.5 V	+1.5 V	+1.5 V	+1.5 V
	LOW	−1.5 V	−1.5 V	−1.5 V	−1.5 V
		ENABLE	DISABLE	ENABLE	DISABLE

2. Connect the HP 8130A/HP 8131A's TRIG OUTPUT via:
   a. a BNC(m) to SMA(f) adapter (HP 8130A only)
   b. SMA(m-m) coaxial cable assembly
   c. an APC 3.5 mm 20 dB Attenuator (f-m)

   to the TRIG Input of the HP 54121A.
3. Connect the HP 8130A/HP 8131A OUTPUT 1/2 via a similar accessory assembly to the Input 4 of the HP 54121A.

Procedure

1. Set the HP 54121T Oscilloscope:
   a. press AUTOSCALE
   b. select the Display menu and set the Number of Averages to 64
   c. select the delta V menu and turn the voltage markers On
   d. set Preset Levels = 50-50% and press Auto Level Set
   e. select the delta t menu and turn the time markers On
   f. set START ON EDGE = POS1 and STOP ON EDGE = NEG1.
2. Change the oscilloscope timebase to 500 ps/div.
3. Change the HP 8130A Width to 1.5 ns or the HP 8131A Width to 500 ps.
4. Press the Precise Edge Find key for each new Width setting.

5. Check the HP 8130A/HP 8131A pulse width at the following settings:

Width	Acceptable Range	HP 8130A TR entry	HP 8131A TR entry
*500 ps	225 ps to 775 ps	—	4-1
800 ps	510 ps to 1.09 ns	—	4-2
**1.5 ns	1.175 ns to 1.825 ns	4-1	—
2.0 ns	1.650 ns to 2.350 ns	4-2	4-3
5.0 ns	4.500 ns to 5.500 ns	4-3	4-4
10.0 ns	9.250 ns to 10.750 ns	4-4	4-5
20.0 ns	18.750 ns to 21.250 ns	4-5	4-6
50.0 ns	47.250 ns to 52.750 ns	4-6	4-7
80.0 ns	75.750 ns to 84.250 ns	4-7	4-8
99.9 ns	94.650 ns to 105.150 ns	4-8	4-9

6. For the HP 8130A step with the Vernier up keys from:
   a. 1.5 ns to 1.6 ns in 10 ps steps
   b. 1.6 ns to 2 ns in 100 ps steps
   c. 2 ns to 10 ns in 1 ns steps

   Check the function/variation on the oscilloscope.
7. For the HP 8131A step with the Vernier up keys from:
   a. 500 ps to 600 ps in 10 ps steps
   b. 600 ps to 1 ns in 100 ps steps
   c. 1 ns to 10 ns in 1 ns steps

   Check the function/variation on the oscilloscope.

Note

* To meet this specification it is acceptable to program the value to less than 500 ps.

** To meet this specification it is acceptable to program the value to less than 1.5 ns.

Width Test, Part 2: Long Width Tests

Setup

1. Set the HP 8130A/HP 8131A:

		HP 8130A		HP 8131A	
CONTROL	SETTING	CHANNEL 1	CHANNEL 2	CHANNEL 1	CHANNEL 2
MODE	AUTO				
TIMING	PERIOD	95 μs		95 μs	
	DEL	0 ns	0 ns	0 ns	0 ns
	WIDTH	500 ns	1.5 ns	500 ns	1.0 ns
	LEAD	1.00 ns	1.00 ns	—	—
	TRA	1.00 ns	1.00 ns	—	—
OUTPUT	HIGH	+1.5 V	+1.5 V	+1.5 V	+1.5 V
	LOW	−1.5 V	−1.5 V	−1.5 V	−1.5 V
		ENABLE	DISABLE	ENABLE	DISABLE

2. Set the counter:

   FUNCTION = TI A to B

   START = 50 Ω, POS (+) slope, DC, X1

   STOP = 50 Ω, NEG (−) slope, DC, X1

   Gate Time = as necessary

   INPUT MODE = COM

   START/STOP trigger levels = Preset.

3. Connect the HP 8130A/HP 8131A OUTPUT 1/2 to the counter's START input.

Procedure

Check the HP 8130A/HP 8131A pulse width at the following Period and Width settings:

Period	WIDTH	Acceptable Range	HP 8130A TR entry	HP 8131A TR entry
95.0 μs	500 ns	474.75 ns to 525.250 ns	4-9	4-10
95.0 μs	999 ns	948.80 ns to 1.049 μs	4-10	4-11
95.0 μs	10 μs	9.50 μs to 10.500 μs	4-11	4-12
99.9 ms	100 μs	95.00 μs to 105.000 μs	4-12	4-13
99.9 ms	1 ms	950.00 μs to 1.050 ms	4-13	4-14
99.9 ms	80 ms	76.00 ms to 84.000 ms	4-14	4-15

5. Jitter Test

This test consists of three parts:

1. Period Jitter
2. Delay Jitter
3. Width Jitter

Note Repeat the tests for the second channel, if installed.

Specifications

rms Jitter: 10 ns to 100 ns range: 0.05% of programmed value +15 ps
All other ranges: 0.025% of programmed value +15 ps

Equipment

HP 54121T Digitizing Oscilloscope with Accessory
HP 54008A Delay Line (HP 8130A only)

Jitter Test, Part 1: Period Jitter Test

Setup

1. Set the HP 8130A/HP 8131A:

		HP 8130A		HP 8131A	
CONTROL	SETTING	CHANNEL 1	CHANNEL 2	CHANNEL 1	CHANNEL 2
MODE	AUTO				
TIMING	PERIOD	50 ns		50 ns	
	DEL	0 ns	0 ns	0 ns	0 ns
	WIDTH	25 ns	500 ps	25 ns	500 ps
	LEAD	1.00 ns	1.00 ns	—	—
	TRA	1.00 ns	1.00 ns	—	—
OUTPUT	HIGH	+1.0 V	+1.0 V	+1.0 V	+1.0 V
	LOW	0 V	0 V	0 V	0 V
		ENABLE	DISABLE	ENABLE	DISABLE

2. Connect an APC 3.5 mm 20 dB Attenuator (f-m) to the TRIG Input of the HP 54121A.
3. Connect (via an SMA (m-m) adapter) the APC 3.5 mm (f) output of the Power Splitter HP 11667B to the 20 dB Attenuator at the TRIG Input of the HP 54121A.
4. For the HP 8130A, connect the other output of the Power Splitter via an SMA(m-m) coaxial cable assembly to one of the SMA connectors on the HP 54008A.
   For the HP 8131A connect the other output of the Power Splitter via an SMA (m) - BNC (f) adapter and connect four BNC (m-m) cables (61 cm) together to this adapter. Use three BNC adapters (f-f).
5. For the HP 8130A connect the free SMA Connector on the HP 54008A Delay Line to input 3 of the HP 54121A.
   For the HP 8131A connect the cable assembly via a BNC(f)-SMA(m) adapter to input 3 of the HP 54121A.
6. Connect the HP 8130A/HP 8131A OUTPUT 1/2 via:
   a. a BNC(m) to SMA(f) adapter (HP 8130A only)
   b. a coaxial cable assembly SMA (m-m).

   to the Input of the Power Splitter.

Procedure

1. Set the HP 54121T Oscilloscope:
   a. press AUTOSCALE
   b. select the Display menu and set the Number of Averages to 128

c. select the Timebase menu and set the TIME/DIV to 200 ps/div for the HP 8130A and to 10 ps/div for the HP 8131A

d. center the first positive going edge of the signal (approximate Delay = 26.4 ns for the HP 8130A and 17.8 ns for the HP 8131A)

e. select the channel menu and set the Attenuation factor to 10 (channel 3)

f. set the VOLT/DIV to 10 mV/div

g. select the delta V menu and turn the V Markers On

h. set the Marker 1 Position to 240 mV and the Marker 2 Position to 245 mV

i. select the delta t menu and turn the T Markers On

j. set START ON EDGE = POS1 and STOP ON EDGE = POS1

k. press the Precise Edge Find key.

2. RECORD the delta t! It is the rise time of the reference signal within a 1% amplitude window of the signal connected to Input 3. This value is needed later to calculate the correct jitter.

3. Select the oscilloscope's Timebase menu and center the second positive going edge of the signal (actual Delay +50.x ns = approximate Delay 66.x ns)

4. Press More and Histogram.

5. Select the Window submenu and set:

   Source is channel 3

   choose the time Histogram

   press WINDOW MARKER 1 and set it to 240 mV

   press WINDOW MARKER 2 and set it to 245 mV

6. Select the Acquire submenu and set the Number of Samples to 1000.
   Press Start Acquiring.

7. After the data for the time histogram has been acquired (#Samples = 100%), select the Result submenu.

8. Press Mean and Sigma. RECORD the value of Sigma!

9. The rms jitter is calculated as follows:

$$\frac{6\sigma - \Delta t_{ref\ signal}}{6}$$

10. Maximum rms jitter (period = 50 ns) is 40 ps **TR entry 5-1**

11. Set the HP 8130A/HP 8131A: PER 500 ns

12. Repeat steps 3 to 9.

Note Time/Div 100 ps/div Delay approximately 51x.x ns

Maximum rms jitter (period = 500 ns) is 140 ps **TR entry 5-2**

Jitter Test, Part 2: Width Jitter Test

Setup

1. Same setup as in previous test.
2. Set the HP 8130A/HP 8131A:

		HP 8130A		HP 8131A	
CONTROL	SETTING	CHANNEL 1	CHANNEL 2	CHANNEL 1	CHANNEL 2
TIMING	PERIOD	1.00 μs		1.00 μs	
	WIDTH	1.5 ns	1.5 ns	1.0 ns	500 ps

Procedure

1. Set the HP 54121T Oscilloscope:
   a. press the More key
   b. select the Display menu and set the #Averages = 256
   c. select the Timebase menu and center the first negative going edge of the signal (For the HP 8130A Time/Div 20 ps/div, approximate Delay = 28.x ns: for the HP 8131A Time/Div 10 ps/div, approximate Delay = 17.x ns).
   d. select the delta V menu and set the Marker 1 Position to 260 mV and the Marker 2 Position to 255 mV
   e. select the delta t menu and set START ON EDGE = NEG1 and STOP ON EDGE = NEG1
   f. press the Precise Edge Find key.
2. RECORD delta t! It is the fall time of the signal within a 1% amplitude window of the signal connected to Input 3. This value is needed later to calculate the correct jitter.
3. Set the HP 8130A/HP 8131A: WID 50 ns
4. Select the oscilloscope's Timebase menu and center the first negative going edge of the signal (Time/Div 20 ps/div, Delay approximately 77.x ns for the HP 8130A and 66.x ns for the HP 8131A).
5. Press More = Histogram.
6. Select the Window submenu and press WINDOW MARKER 1 and set it to 260 mV press WINDOW MARKER 2 and set it to 255 mV.
7. Select the Acquire submenu and press Start Acquiring.
8. After the data for the time histogram is acquired (#Samples = 100%), select the Result submenu.
9. Press Mean and Sigma. RECORD the value of Sigma!

10. The rms jitter is calculated as follows:

$$\frac{6\sigma - \Delta t_{fall\ time}}{6}$$

11. Maximum rms jitter (width = 50 ns) is 40 ps **TR entry 5-3**
12. Set the HP 8130A/HP 8131A: WID 500 ns
13. Repeat steps 4 to 8.

Note Time/Div 100 ps/div, Delay 51x.x ns

Maximum rms jitter (width 500 ns) is 140 ps. **TR entry 5-4**

14. DISABLE THE HP 8130A/HP 8131A OUTPUTS !

Jitter Test, Part 3: Delay Jitter Test

Setup

1. Set the HP 8130A/HP 8131A:

		HP 8130A		HP 8131A	
CONTROL	SETTING	CHANNEL 1	CHANNEL 2	CHANNEL 1	CHANNEL 2
MODE	AUTO				
TIMING	PERIOD	500 ns		500 ns	
	DEL	250 ns	0 ns	250 ns	0 ns
	WIDTH	50 ns	500 ps	50 ns	500 ps
	LEAD	1.00 ns	1.00 ns	—	—
	TRA	1.00 ns	1.00 ns	—	—
OUTPUT	HIGH	+5 V	+5 V	+5 V	+5 V
	LOW	0 V	0 V	0 V	0 V
		ENABLE	DISABLE	ENABLE	DISABLE

2. Connect the HP 8130A/HP 8131A's TRIG OUTPUT via:
   a. a BNC(m) to SMA(f) adapter (HP 8130A only)
   b. an SMA(m-m) coaxial cable assembly
   c. an APC 3.5 mm 20 dB Attenuator (f-m)

   to the TRIG Input of the HP 54121A.
3. Connect the HP 8130A/HP 8131A OUTPUT 1/2 via a similar second accessory assembly to Input 3 of the HP 54121A.

4. ENABLE the output.

Procedure

1. Set the HP 54121T Oscilloscope:
   a. press AUTOSCALE
   b. select the Display menu and set the #Averages = 128
   c. select the Timebase menu and set the TIME/DIV = 50 ps/div
   d. center the first positive going edge of the signal (approximate Delay = 26x.x ns)
   e. set the VOLT/DIV = 10 mV/div, Offset = 2.45V;
2. Press More = Histogram.
3. Select the Window submenu and press WINDOW MARKER 1 and set it to 2.450 V press WINDOW MARKER 2 and set it to 2.445 V
4. Select the Acquire submenu and press Start Acquiring.
5. After the data for the time histogram has been acquired (#Samples = 100%), select the Result submenu.
6. Press Mean and Sigma. RECORD the value of Sigma!
7. The rms jitter is calculated as follows:

$$\frac{6\sigma - \Delta t_{ref\ signal}}{6}$$

8. Maximum rms jitter (delay = 250 ns) is 67.5 ps **TR entry 5-5**

6. High Level and Low Level Tests

Note Repeat the high level and low level tests for the second channel, if installed.

Specifications

Note This specification applies to 50 Ω sources and 50 Ω loads.

High Level:	−4.90 V to 5.00 V.
Low Level:	−5.00 V to 4.90 V.
Resolution:	3 digits (best case: 10.0 mV).
Level Accuracy:	1% of programmed value ±3% of pulse amplitude, ±40 mV.
Repeatability:	Factor 4 better than accuracy
Settling time:	For the HP 8130A, 20 ns + transition time at fastest; for the HP 8131A, 10 ns + transition time at fastest

Equipment

1. Multimeter (HP 3478)
2. 50 Ω feedthrough termination, 0.1%, 10 W (see figure 4-1)
3. Adapter, BNC to dual banana plug (HP 1251-2277)
4. Cables, BNC to BNC, two each
5. Pulse Generator with a 50 Ω feedthrough termination

High Level Test

Setup

1. Set the HP 8130A/HP 8131A:

		HP 8130A		HP 8131A	
CONTROL	SETTING	CHANNEL 1	CHANNEL 2	CHANNEL 1	CHANNEL 2
MODE	AUTO				
TIMING	PERIOD	99.9 ms		99.9 ms	
	DEL	30 μs	0 ps	30 μs	0 ps
	WIDTH	50 ms	500 ps	50 ms	500 ps
	LEAD	1.00 ns	1.00 ns	—	—
	TRA	1.00 ns	1.00 ns	—	—
OUTPUT	HIGH	+5 V	+5 V	+5 V	+5 V
	LOW	0 V	0 V	0 V	0 V
		ENABLE	DISABLE	ENABLE	DISABLE

2. Set the Multimeter (HP 3478).
   a. SGL TRIG = Single Trigger
   b. Blue/AUTO ZERO = Auto Zero off
   c. BLUE/4 = 4 digits
3. Set the Pulse Generator:
   a. Mode: Trigger
   b. Trigger slope positive
   c. Width: 500 ns
   d. HIL: 2.0 V
4. Connect the HP 8130A/HP 8131A OUTPUT 1/2 via:
   a. a SMA(m) to BNC(f) adapter (HP 8131A only)
   b. a 50 Ω feedthrough (0.1%, 10 W)
   c. a BNC (m-m) cable
   d. a BNC to dual banana plug adapter

   to the Multimeter's Input.
5. Connect the HP 8130A/HP 8131A TRIG OUTPUT to the Pulse Generator's External Input. This must be done via an SMA (m) to BNC (f) for the HP 8131A.
6. Connect the Pulse Generator's Output via a 50 Ω feedthrough terminator to the Multimeter's Trigger Input.

Procedure

Check the HP 8130A/HP 8131A high level at the following HIGH settings with the low level set to 0.00 V.

High Level	Acceptable Range	TR entry
5.0V	4.76 V to 5.24 V	6-1
3.0 V	2.84 V to 3.16 V	6-2
1.0 V	920 mV to 1.08 V	6-3
0.5 V	440 mV to 560 mV	6-4
0.1 V	56 mV to 144 mV	6-5

The low level 0.0 V may vary within ±3% of pulse amplitude, ±40 mV.

Low Level Test

Setup

Set the HP 8130A/HP 8131A:

		HP 8130A		HP 8131A	
CONTROL	SETTING	CHANNEL 1	CHANNEL 2	CHANNEL 1	CHANNEL 2
MODE	AUTO				
TIMING	PERIOD	99.9 ms		99.9 ms	
	DEL	30 ms	0 ps	30 ms	0 ps
	WIDTH	50 ms	500 ps	50 ms	500 ps
	LEAD	1.00 ns	1.00 ns	—	—
	TRA	1.00 ns	1.00 ns	—	—
OUTPUT	HIGH	0 V	0 V	0 V	0 V
	LOW	−0.1 V	−0.1 V	−0.1 V	−0.1 V
		ENABLE	DISABLE	ENABLE	DISABLE

Procedure

Check the HP 8130A/HP 8131A low level at the following low settings with the high level set to 0.00 V.

Low Level	Acceptable Range	TR entry
−0.1 V	56 mV to 144 mV	6-6
−0.5 V	440 mV to 560 mV	6-7
−1.0 V	920 mV to 1.08 V	6-8
−3.0 V	2.84 V to 3.16 V	6-9
−5.0 V	4.76 V to 5.24 V	6-10

The high level 0.0 V may vary within ±3% of pulse amplitude, ±40 mV.

7. Transition Time Test

Note Repeat the entire transition time test procedure for the second channel, if it is installed.

HP 8130A Specifications

Range: 1 ns to 100 μs

Resolution: 3 digits (best case 10 ps)

Accuracy: ±10% of programmed value ±300 ps

HP 8131A Specifications

10% - 90% amplitude: < 200 ps, 300 mV to 3 V range, PER $\leq$ 1μs
20% - 80% amplitude: < 200 ps, 100 mV to 5 V range

Equipment

HP 54121T Digitizing Oscilloscope with Accessory

Setup

1. Set the HP 8130A/HP 8131A:

		HP 8130A		HP 8131A	
CONTROL	SETTING	CHANNEL 1	CHANNEL 2	CHANNEL 1	CHANNEL 2
MODE	AUTO				
TIMING	PERIOD	500 μs		500 μs	
	DEL	10 ns	0 ps	10 ns	0 ps
	DCYC	50%	50%	50%	50%
OUTPUT	HIGH	+5 V	+5 V	+5 V	+5 V
	LOW	0 V	0 V	0 V	0 V
		ENABLE	DISABLE	ENABLE	DISABLE

2. Connect the HP 8130A/HP 8131A's TRIG OUTPUT via:
   a. a BNC(m) - SMA(f) adapter (HP 8130A only)
   b. cable assembly-coaxial SMA(m-m)
   c. an APC 3.5 mm 20 dB Attenuator (f-m)

   to the TRIG Input of the HP 54121A

3. Connect the HP 8130A/HP 8131A OUTPUT 1/2 via a similar accessory assembly to Input 4 of the HP 54121A.

HP 8130A Procedure

1. Set the HP 54121T Oscilloscope:
   a. press AUTOSCALE
   b. Center one pulse horizontally and vertically on screen (for example, TIME/DIV = 50 μs/div, DELAY = 375 μs, VOLT/DIV = 800 mV/div, Offset = 2.5 V).
   c. select the Display menu and set the Number of Averages to 64
   d. select the channel menu and set the Attenuation factor to 10
   e. select the delta V menu and turn the voltage markers On
   f. set Preset Levels = 10-90% and press Auto Level Set
   g. select the Timebase menu and set TIME/DIV = 2 ns, DELAY = 16 ns
   h. select the delta t menu and turn the time markers On
   i. set START ON EDGE = POS1 and STOP ON EDGE = POS1
2. Set HP 8130A: Period: 1μs
3. After the averaging, while the Oscilloscope is in the delta t menu, press the Precise Edge Find Key.
4. Check the HP 8130A rise times at the following leading edge settings

Oscilloscope Time/Div	Period	Leading edge	Trailing edge	Acceptable Range	TR entry
2 ns	1 μs	1 ns*	1 ns to	1.31 ns	7-1
5 ns		10 ns	5 ns	8.7 ns to 11.3 ns	7-2
10 ns		50 ns	50 ns	44.7 ns to 55.3 ns	7-3
20 ns	5 μs	100 ns	500 ns	90 ns to 110 ns	7-4
100 ns		500 ns		400 ns to 550 ns	7-5
200 ns		1 μs		900 ns to 1.10 μs	7-6
500 ns	50 μs	2 μs	5 μs	1.80 μs to 2.20 μs	7-7
1 μs		5 μs		4.50 μs to 5.5 μs	7-8
2 μs	500 μs	10 μs		9 μs to 11 μs	7-9
10 μs		50 μs	50 μs	45 μs to 55 μs	7-10
20 μs		100 μs		90 μs to 110 μs	7-11

* Underprogramming to 670 ps is allowed to meet this specification.

5. Set the HP 8130A: Leading: 1 ns, Trailing: 1 ns

6. Select the oscilloscope's Timebase menu and set DELAY = 520ns
   Select the oscilloscope's delta t menu and set START ON EDGE = NEG1 and STOP ON EDGE = NEG1.
7. While the oscilloscope is in the delta t menu press the Precise Edge Find Key.
8. Check the HP 8130A output signal fall times at the following trailing edge settings

Oscilloscope Time/Div	Period	Trailing edge	Leading edge	Acceptable Range	TR entry
2 ns	1 μs	1 ns*	1 ns	to 1.31 ns	7-12
5 ns		10 ns	5 ns	8.7 ns to 11.3 ns	7-13
10 ns		50 ns	50 ns	44.7 ns to 55.3 ns	7-14
20 ns	5 μs	100 ns	500 ns	90 ns to 110 ns	7-15
100 ns		500 ns		400 ns to 550 ns	7-16
200 ns		1 μs		900 ns to 1.10 μs	7-17
500 ns	50 μs	2 μs	5 μs	1.80 μs to 2.20 μs	7-18
1 μs		5 μs		4.50 μs to 5.5 μs	7-19
2 μs	500 μs	10 μs		9 μs to 11 μs	7-20
10 μs		50 μs	50 μs	45 μs to 55 μs	7-21
20 μs		100 μs		90 μs to 110 μs	7-22

* Underprogramming to 670 ps is allowed to meet this specification.

HP 8131A Procedure

1. Set the HP 54121T Oscilloscope:
   a. press AUTOSCALE
   b. Center one pulse horizontally and vertically on screen (for example, TIME/DIV = 50 μs/div, DELAY = 375 μs, VOLT/DIV = 800 mV/div, Offset = 2.5 V).
   c. select the Display menu and set the Number of Averages to 64
   d. select the channel menu and set the Attenuation factor to 10
   e. select the delta V menu and turn the voltage markers On
   f. set Preset Levels = 20-80% and press Auto Level Set
   g. select the Timebase menu and set TIME/DIV = 20 ns, DELAY = 16 ns
   h. select the delta t menu and turn the time markers On
   i. set START ON EDGE = POS1 and STOP ON EDGE = POS1
2. Set HP 8131A: Period: 250 ns
3. While the Oscilloscope is in the delta t menu, press the Precise Edge Find Key.
4. Check for rise time < 200 ps **TR ENTRY 7-1.**

5. Select the oscilloscope delta t menu and set START ON EDGE = NEG1 and STOP ON EDGE = NEG1.
6. Press the Precise Edge Find Key
7. Check for Fall time < 200 ps **TR ENTRY 7-2**
8. Repeat steps 1 to 8 with HP 8131A set:
   HIGH = 3.0 V
   TR ENTRIES 7-3 and 7-4

Note

Set the voltage marker in the delta V menu to the 10-90% levels. Take the oscilloscope trace flatness error (GaAs IC input circuit) into account.

---

8. Pulse Aberration Test

Note Repeat this test for the second channel, if installed.

Specifications

Overshoot and Ringing: ≤10% of the pulse amplitude ±20 mV for the HP 8130A; ≤ 15% of the pulse amplitude ±20 mV for the HP 8131A.

Equipment

HP 54121T Digitizing Oscilloscope with Accessory

Setup

1. Set the HP 8130A/HP 8131A:

		HP 8130A		HP 8131A	
CONTROL	SETTING	CHANNEL 1	CHANNEL 2	CHANNEL 1	CHANNEL 2
MODE	AUTO				
TIMING	PERIOD	500 μs		500 μs	
	DEL	5 ns	0 ps	5 ns	0 ps
	DCYC	50%	50%	50%	50%
OUTPUT	HIGH	+5 V	+5 V	+5 V	+5 V
	LOW	0 V	0 V	0 V	0 V
		ENABLE	DISABLE	ENABLE	DISABLE

2. Connect the HP 8130A/HP 8131A's TRIG OUTPUT via:
   a. a BNC(f) - SMA(m) adapter (HP 8130A only)
   b. cable assembly-coaxial SMA (m-m)
   c. an APC 3.5 mm 20 dB Attenuator (f-m)

   to the TRIG Input of the HP 54121A.
3. Connect the HP 8130A/HP 8131A OUTPUT 1/2 via a similar accessory assembly to the Input 4 of the HP 54121A.

Procedure

1. Set the HP 54121T Oscilloscope:
   a. press AUTOSCALE
   b. Center one pulse horizontally and vertically on screen (e.g. TIME/DIV = 50 μs/div; DELAY = 377 μs for the HP 8130A and 350 μs for the HP 8131A; VOLT/DIV = 800 mV/div)
   c. select the Display menu and set the Number of Averages to 64
   d. select the channel menu and set the Attenuation factor to 10
   e. select the delta V menu and turn the voltage markers On
   f. set the VARIABLE LEVELS = 90-110% for the HP 8130A and 85-115% for the HP 8131A and press Auto Level Set
   g. select the channel menu and center vertically the top pulse (Offset = 5 V)
   h. set the VOLTS/DIV to 500 mV/div
   i. select the Timebase menu and set TIME/DIV = 500 ps, DELAY = 21.5 ns for the HP 8130A and 17.x ns for the HP 8131A.
2. Set HP 8130A/HP 8131A: Period: 500 ns
3. Check the Overshoot and Ringing for $\leq$ 10% $\pm$20 mV for the HP 8130A and $\leq$ 15% $\pm$20 mV for the HP 8131A **TR entry 8-1**

Note Take the oscilloscope's trace flatness error (GaAs input circuit) into account.

---

4. Repeat steps 1 to 3.
   Set HP 8130A/HP 8131A; HIGH = 500 mV **TR entry 8-2**

This page intentionally blank

The HP 8130A Performance Test Record

MODEL: HP 8130A TESTED BY:_____

SERIAL NUMBER:_____ DATE:_____

CUSTOMER:_____ CSO#:_____

COMMENTS:

Test	Limit Minimum	Actual (TR Entry)	Limit Maximum	Pass	Fail
Period:					
3.33 ns	3.06 ns	(1-1)_____	3.56 ns	_____	_____
5.00 ns	4.65 ns	(1-2)_____	5.35 ns	_____	_____
10.0 ns	9.4 ns	(1-3)_____	10.6 ns	_____	_____
50.0 ns	47.4 ns	(1-4)_____	52.6 ns	_____	_____
100 ns	94.9 ns	(1-5)_____	105.1 ns	_____	_____
500 ns	474.9 ns	(1-6)_____	525.1 ns	_____	_____
1.00 μs	949.9 ns	(1-7)_____	1.05 μs	_____	_____
5.00 μs	4.75 μs	(1-8)_____	5.25 μs	_____	_____
10.0 μs	9.5 μs	(1-9)_____	10.5 μs	_____	_____
50.0 μs	47.5 μs	(1-10)_____	52.5 μs	_____	_____
100 μs	95 μs	(1-11)_____	105 μs	_____	_____
500 μs	475 ms	(1-12)_____	525 μs	_____	_____
1.00 ms	950 ms	(1-13)_____	1.05 ms	_____	_____
5.00 ms	4.75 ms	(1-14)_____	5.25 ms	_____	_____
10.0 ms	9.5 ms	(1-15)_____	10.5 ms	_____	_____
50 ms	47.5 ms	(1-16)_____	52.5 ms	_____	_____
99.9 ms	94.9 ms	(1-17)_____	104.9 ms	_____	_____

Test	Limit Minimum	Actual (TR Entry)	Limit Maximum	Pass	Fail
Short Delay:					
0.00 ns	–	(2-1)_____	–	_____	_____
10.0 ns	8.0 ns	(2-2)_____	12.0 ns	_____	_____
20.0 ns	17.5 ns	(2-3)_____	22.5 ns	_____	_____
50.0 ns	46.0 ns	(2-4)_____	54.0 ns	_____	_____
80.0 ns	74.5 ns	(2-5)_____	85.5 ns	_____	_____
99.9 ns	93.4 ns	(2-6)_____	106.4 ns	_____	_____
Long Delay:					
100 ns	93.5 ns	(2-7)_____	106.5 ns	_____	_____
500 ns	473.5 ns	(2-8)_____	526.5 ns	_____	_____
999 ns	947.55 ns	(2-9)_____	1.051 μs	_____	_____
100 μs	95 μs	(2-10)_____	105 μs	_____	_____
1 ms	950 ms	(2-11)_____	1.05 ms	_____	_____
80 ms	76 ms	(2-12)_____	84 ms	_____	_____
Short Double Pulse:					
20.0 ns	18.75 ns	(3-1)_____	21.25 ns	_____	_____
50.0 ns	47.25 ns	(3-2)_____	52.75 ns	_____	_____
80.0 ns	75.75 ns	(3-3)_____	84.25 ns	_____	_____
99.9 ns	94.65 ns	(3-4)_____	105.15 ns	_____	_____
3.33 ns	2.91 ns	(3-5)_____	3.75 ns	_____	_____
5.00 ns	4.5 ns	(3-6)_____	5.5 ns	_____	_____
10.0 ns	9.25 ns	(3-7)_____	10.75 ns	_____	_____

Test	Limit Minimum	Actual (TR Entry)	Limit Maximum	Pass	Fail
Long Double Pulse:					
200 ns	189.75 ns	(3-8)_____	210.25 ns	_____	_____
1 μs	950 ns	(3-9)_____	1.05 μs	_____	_____
10 μs	9.5 μs	(3-10)_____	10.5 μs	_____	_____
100 μs	95 μs	(3-11)_____	105 μs	_____	_____
1 ms	950 μs	(3-12)_____	1.05 ms	_____	_____
10 ms	9.5 ms	(3-13)_____	10.5 ms	_____	_____
80 ms	76 ms	(3-14)_____	84 ms	_____	_____
Short Width:					
1.5 ns	1.175 ns	(4-1)_____	1.825 ns	_____	_____
2.00 ns	1.65 ns	(4-2)_____	2.35 ns	_____	_____
5.00 ns	4.5 ns	(4-3)_____	5.5 ns	_____	_____
10.0 ns	9.25 ns	(4-4)_____	10.75 ns	_____	_____
20.0 ns	18.75 ns	(4-5)_____	21.25 ns	_____	_____
50.0 ns	47.25 ns	(4-6)_____	52.75 ns	_____	_____
80.0 ns	75.75 ns	(4-7)_____	84.25 ns	_____	_____
99.9 ns	94.65 ns	(4-8)_____	105.15 ns	_____	_____
Long Width:					
500 ns	474.75 ns	(4-10)_____	525.25 ns	_____	_____
999 ns	948.8 ns	(4-11)_____	1.049 μs	_____	_____
10 μs	9.5 μs	(4-12)_____	10.5 μs	_____	_____
100 μs	95 μs	(4-13)_____	105 μs	_____	_____
1 ms	950 μs	(4-14)_____	1.05 ms	_____	_____
80 ms	76 ms	(4-15)_____	84 ms	_____	_____

Test	Limit Minimum	Actual (TR Entry)	Limit Maximum	Pass	Fail
Period Jitter:					
≤ 40 ps		(5-1)_____		_____	_____
≤ 140 ps		(5-2)_____		_____	_____
Width Jitter:					
≤ 40 ps		(5-3)_____		_____	_____
≤ 140 ps		(5-4)_____		_____	_____
Delay Jitter:					
≤ 67.5 ps		(5-5)_____		_____	_____
High Level:					
5.0 V	4.76 V	(6-1)_____	5.24 V	_____	_____
3.0 V	2.84 V	(6-2)_____	3.16 V	_____	_____
1.0 V	920 mV	(6-3)_____	1.08 V	_____	_____
0.5 V	440 mV	(6-4)_____	560 mV	_____	_____
0.1 V	56 mV	(6-5)_____	144 mV	_____	_____
Low Level:					
−0.1 V	−56 mV	(6-6)_____	−144 mV	_____	_____
−0.5 V	−440 mV	(6-7)_____	−560 mV	_____	_____
−1.0 V	−920 mV	(6-8)_____	−1.08 V	_____	_____
−3.0 V	−2.84 V	(6-9)_____	−3.16 V	_____	_____
−5.0 V	−4.76 V	(6-10)_____	−5.24 V	_____	_____

Test	Limit Minimum	Actual (TR Entry)	Limit Maximum	Pass	Fail
Leading edge:					
1 ns	—	7-1_____	1.31 ns	_____	_____
10 ns	8.7 ns	7-2_____	11.3 ns	_____	_____
50 ns	44.7 ns	7-3_____	55.3 ns	_____	_____
100 ns	90 ns	7-4_____	110 ns	_____	_____
500 ns	400 ns	7-5_____	550 ns	_____	_____
1 μs	900 ns	7-6_____	1.10 μs	_____	_____
2 μs	1.80 μs	7-7_____	2.20 μs	_____	_____
5 μs	4.50 μs	7-8_____	5.5 μs	_____	_____
10 μs	9 μs	7-9_____	11 μs	_____	_____
50 μs	45 μs	7-10_____	55 μs	_____	_____
100 μs	90 μs	7-11_____	110 μs	_____	_____
Trailing edge:					
1 ns	—	7-12_____	1.31 ns	_____	_____
10 ns	8.7 ns	7-13_____	11.3 ns	_____	_____
50 ns	44.7 ns	7-14_____	55.3 ns	_____	_____
100 ns	90 ns	7-15_____	110 ns	_____	_____
500 ns	400 ns	7-16_____	550 ns	_____	_____
1 μs	900 ns	7-17_____	1.10 μs	_____	_____
2 μs	1.80 μs	7-18_____	2.20 μs	_____	_____
5 μs	4.50 μs	7-19_____	5.5 μs	_____	_____
10 μs	9 μs	7-20_____	11 μs	_____	_____
50 μs	45 μs	7-21_____	55 μs	_____	_____
100 μs	90 μs	7-22_____	110 μs	_____	_____
Pulse Aberration					
$\leq$ 10% $\pm$20m V		(8-1)_____		_____	_____
$\leq$ 10% $\pm$20m V		(8-2)_____		_____	_____

This page intentionally blank

The HP 8131A Performance Test Record

MODEL: HP 8131A TESTED BY:_____

SERIAL NUMBER:_____ DATE:_____

CUSTOMER:_____ CSO#:_____

COMMENTS:

Test	Limit Minimum	Actual (TR Entry)	Limit Maximum	Pass	Fail
Period:					
2.00 ns	1.80 ns	(1-1)_____	2.20 ns	_____	_____
5.00 ns	4.65 ns	(1-2)_____	5.35 ns	_____	_____
10.0 ns	9.4 ns	(1-3)_____	10.6 ns	_____	_____
50.0 ns	47.4 ns	(1-4)_____	52.6 ns	_____	_____
100 ns	94.9 ns	(1-5)_____	105.1 ns	_____	_____
500 ns	474.9 ns	(1-6)_____	525.1 ns	_____	_____
1.00 μs	949.9 ns	(1-7)_____	1.05 μs	_____	_____
5.00 μs	4.75 μs	(1-8)_____	5.25 μs	_____	_____
10.0 μs	9.5 μs	(1-9)_____	10.5 μs	_____	_____
50.0 μs	47.5 μs	(1-10)_____	52.5 μs	_____	_____
100 μs	95 μs	(1-11)_____	105 μs	_____	_____
500 μs	475 ms	(1-12)_____	525 μs	_____	_____
1.00 ms	950 ms	(1-13)_____	1.05 ms	_____	_____
5.00 ms	4.75 ms	(1-14)_____	5.25 ms	_____	_____
10.0 ms	9.5 ms	(1-15)_____	10.5 ms	_____	_____
50 ms	47.5 ms	(1-16)_____	52.5 ms	_____	_____
99.9 ms	94.9 ms	(1-17)_____	104.9 ms	_____	_____

Test	Limit Minimum	Actual (TR Entry)	Limit Maximum	Pass	Fail
Short Delay:					
0.00 ns	–	(2-1)_____	–	_____	_____
10.0 ns	8.0 ns	(2-2)_____	12.0 ns	_____	_____
20.0 ns	17.5 ns	(2-3)_____	22.5 ns	_____	_____
50.0 ns	46.0 ns	(2-4)_____	54.0 ns	_____	_____
80.0 ns	74.5 ns	(2-5)_____	85.5 ns	_____	_____
99.9 ns	93.4 ns	(2-6)_____	106.4 ns	_____	_____
Long Delay:					
100 ns	93.5 ns	(2-7)_____	106.5 ns	_____	_____
500 ns	473.5 ns	(2-8)_____	526.5 ns	_____	_____
999 ns	947.55 ns	(2-9)_____	1.051 μs	_____	_____
100 μs	95 μs	(2-10)_____	105 μs	_____	_____
1 ms	950 ms	(2-11)_____	1.05 ms	_____	_____
80 ms	76 ms	(2-12)_____	84 ms	_____	_____
Short Double Pulse:					
20.0 ns	18.75 ns	(3-1)_____	21.25 ns	_____	_____
50.0 ns	47.25 ns	(3-2)_____	52.75 ns	_____	_____
80.0 ns	75.75 ns	(3-3)_____	84.25 ns	_____	_____
99.9 ns	94.65 ns	(3-4)_____	105.15 ns	_____	_____
3.33 ns	2.91 ns	(3-5)_____	3.75 ns	_____	_____
5.00 ns	4.5 ns	(3-6)_____	5.5 ns	_____	_____
10.0 ns	9.25 ns	(3-7)_____	10.75 ns	_____	_____

Test	Limit Minimum	Actual (TR Entry)	Limit Maximum	Pass	Fail
Long Double Pulse:					
200 ns	189.75 ns	(3-8)_____	210.25 ns	_____	_____
1 μs	950 ns	(3-9)_____	1.05 μs	_____	_____
10 μs	9.5 μs	(3-10)_____	10.5 μs	_____	_____
100 μs	95 μs	(3-11)_____	105 μs	_____	_____
1 ms	950 μs	(3-12)_____	1.05 ms	_____	_____
10 ms	9.5 ms	(3-13)_____	10.5 ms	_____	_____
80 ms	76 ms	(3-14)_____	84 ms	_____	_____
Short Width:					
500 ps	225 ps	(4-1)_____	775 ps	_____	_____
800 ps	510 ps	(4-2)_____	1.09 ns	_____	_____
2.00 ns	1.65 ns	(4-3)_____	2.35 ns	_____	_____
5.00 ns	4.5 ns	(4-4)_____	5.5 ns	_____	_____
10.0 ns	9.25 ns	(4-5)_____	10.75 ns	_____	_____
20.0 ns	18.75 ns	(4-6)_____	21.25 ns	_____	_____
50.0 ns	47.25 ns	(4-7)_____	52.75 ns	_____	_____
80.0 ns	75.75 ns	(4-8)_____	84.25 ns	_____	_____
99.9 ns	94.65 ns	(4-9)_____	105.15 ns	_____	_____
Long Width:					
500 ns	474.75 ns	(4-10)_____	525.25 ns	_____	_____
999 ns	948.8 ns	(4-11)_____	1.049 μs	_____	_____
10 μs	9.5 μs	(4-12)_____	10.5 μs	_____	_____
100 μs	95 μs	(4-13)_____	105 μs	_____	_____
1 ms	950 μs	(4-14)_____	1.05 ms	_____	_____
80 ms	76 ms	(4-15)_____	84 ms	_____	_____

Test	Limit Minimum	Actual (TR Entry)	Limit Maximum	Pass	Fail
Period Jitter:					
≤ 40 ps		(5-1)_____		_____	_____
≤ 140 ps		(5-2)_____		_____	_____
Width Jitter:					
≤ 40 ps		(5-3)_____		_____	_____
≤ 140 ps		(5-4)_____		_____	_____
Delay Jitter:					
≤ 67.5 ps		(5-5)_____		_____	_____
High Level:					
5.0 V	4.76 V	(6-1)_____	5.24 V	_____	_____
3.0 V	2.84 V	(6-2)_____	3.16 V	_____	_____
1.0 V	920m V	(6-3)_____	1.08 V	_____	_____
0.5 V	440m V	(6-4)_____	560m V	_____	_____
0.1 V	56m V	(6-5)_____	144m V	_____	_____
Low Level:					
−0.1 V	−56m V	(6-6)_____	−144m V	_____	_____
−0.5 V	−440m V	(6-7)_____	−560m V	_____	_____
−1.0 V	−920m V	(6-8)_____	−1.08 V	_____	_____
−3.0 V	−2.84 V	(6-9)_____	−3.16 V	_____	_____
−5.0 V	−4.76 V	(6-10)_____	−5.24 V	_____	_____

Test	Limit Minimum	Actual (TR Entry)	Limit Maximum	Pass	Fail
Transitions:					
< 200 ps		7-1 _____		_____	_____
< 200 ps		7-2 _____		_____	_____
< 200 ps		7-3 _____		_____	_____
< 200 ps		7-4 _____		_____	_____
Pulse Aberration					
≤ 15% ±20m V		(8-1)_____		_____	_____
≤ 15% ±20m V		(8-2)_____		_____	_____

5

Replaceable Parts

Introduction

This section contains parts and ordering information for the HP 8130A/HP 8131A Pulse Generator. Table 5-1 lists the reference designators and abbreviations used throughout this manual. Table 5-2 lists the parts recommended for replacement.

Those components of major assemblies that are easily accessible for replacement, are also listed in Table 5-2 with the assembly to which they are related.

Repair philosophy is to board level, therefore individual components for sub assemblies are not listed. However Appendix B to this manual contains a full parts listing for those customers who require it.

Tables 5-3 and 5-4 list those parts that can be readily exchanged.

Replaceable Parts List

The organization of table 5-2, which lists replaceable parts, is as follows:

- Chassis mounted parts in alphanumeric order by reference designation
- Electrical assemblies and their components in alphanumeric order by reference designation

Note An electrical assembly is a cable or a printed circuit board and its components.

- Replaceable parts for the assemblies

The information given for each part consists of the following:

- Complete reference designation
- Description of part
- Hewlett-Packard part number

Reference Designators

Reference designators are alphanumeric names for parts.

1. A1 = electrical assembly number 1
2. MP1 = mechanical part number 1
3. A5F2
   a. A5 = electrical assembly number 5
   b. F2 = fuse number 2 on A5

Ordering Information

To order a part listed in table 5-2, quote the Hewlett-Packard part number, quantity required, and address the order to your nearest Hewlett-Packard office as listed in Appendix A.

You may want to order a part that is not listed as replaceable. In this case, Include the instrument model number, instrument serial number (very important), with a description and function of the part.

Exchange Assemblies

Exchange assemblies are listed in a separate table; table 5-3. These exchange assemblies have a part number in the form xxxxx-695xx, whereas new part numbers are xxxxx665xx. Before ordering an exchange part, it is advisable to contact your local office or repair organization for current procedures and availability.

Direct Mail Order System

Within the USA, Hewlett-Packard can supply parts through direct mail order. The advantages are as follows:

- Direct ordering and shipment from Hewlett-Packard Parts Center in Mountain View, California.
- No maximum or minimum on any mail order (there is a minimum order for parts ordered through local Hewlett-Packard offices when orders require billing and invoicing).
- Prepaid transportation (there is a small handling charge for each order).
- No invoices - to provide these advantages, check or money order must accompany each order. Mail order forms and specific ordering information are available through your local Hewlett-Packard offices.

Table 5-1. Reference Designators and Abbreviations

REFERENCE DESIGNATIONS

A . . . . . assembly
AT . . . attenuator; isolator; termination
B . . . . . fan; motor
BT . . . . . battery
C . . . . . capacitor
CP . . . . . coupler
CR . . . . . diode; diode thyristor; varactor
DC . . . directional coupler
DL . . . . . delay line
DS . . . . . annunciator; signaling device (audible or visual); lamp; LED
E . . . . . miscellaneous electrical part
F . . . . . fuse
FL . . . . . filter
H . . . . . hardware
HY . . . . . circulator
J . . . . electrical connector (stationary portion); jack
K . . . . . relay
L . . . . . coil; inductor
M . . . . . meter
MP . . . . . miscellaneous mechanical part
P . . . . electrical connector (movable portion); plug
Q . . . . . transistor: SCR; triode thyristor
R . . . . . resistor
RT . . . . . thermistor
S . . . . . switch
T . . . . . transformer
TB . . . . . terminal board
TC . . . . . thermocouple
TP . . . . . test point
U . . . . . integrated circuit; microcircuit
V . . . . . electron tube
VR . . . . voltage regulator; breakdown diode
W . . . . cable; transmission path; wire
X . . . . . socket
Y . . . . crystal unit (piezoelectric or quartz)
Z . . . . tuned cavity; tuned circuit

ABBREVIATIONS

A . . . . . ampere
ac . . . . alternating current
ACCESS . . . . . accessory
ADJ . . . . . adjustment
A/D. . . . . analog-to-digital
AF . . . . . audio frequency
AFC . . . . . automatic frequency control
AGC . . . . . automatic gain control
AL . . . . . aluminum
ALC . . . . automatic level control
AM . . . amplitude modulation
AMPL . . . . . amplifier
APC . . . . automatic phase control
ASSY. . . . . assembly
AUX . . . . . auxiliary
avg . . . . . average
AWG . . . . . American wire gauge
BAL . . . . . balance
BCD . . . . . binary coded decimal
BD . . . . . board
BE CU . . . . . beryllium copper
BFO . . . . beat frequency oscillator
BH . . . . . binder head
BKDN . . . . . breakdown
BP . . . . . bandpass
BPF. . . . . bandpass filter
BRS . . . . . brass
BWO . . . . backward-wave oscillator
CAL . . . . . calibrate
ccw . . . . counter-clockwise
CER . . . . . ceramic
CHAN . . . . . channel
cm . . . . . centimeter
CMO . . cabinet mount only
COAX . . . . . coaxial
COEF . . . . . coefficient
COM . . . . . common
COMP . . . . . composition
COMPL . . . . . complete
CONN . . . . . connector
CP . . . . . cadmium plate
CRT . . . cathode-ray tube
CTL . . . . complementary transistor logic
CW . . . . continuous wave
cw . . . . . clockwise
cm . . . . . centimeter
D/A. . . . digital-to-analog
dB . . . . . decibel
dBm . . . . decibel referred to 1 mW
dc. . . . . direct current
deg . . degree (temperature interval or difference)
..° . . . degree (plane angle)
°C . . . . . degree Celsius (centigrade)
°F . . . . degree Fahrenheit
°K . . . . . degree Kelvin
DEPC . . deposited carbon
DET . . . . . detector
diam . . . . . diameter
DIA . . . diameter (used in parts list)
DIFF AMPL . . . differential amplifier
div . . . . . division
DPDT . . . . . double-pole, double-throw
DR . . . . . drive
DSB . . . . double sideband
DTL . . . . diode transistor logic
DVM . . . . digital voltmeter
ECL . . . . emitter coupled logic
EMF . . electromotive force
EDP . . . . . electronic data processing
ELECT. . . . . electrolytic
ENCAP. . . . . encapsulated
EXT . . . . . external
F . . . . . farad
FET . . . . . field-effect transistor
F/F . . . . . flip-flop
FH . . . . . flatt head
FIL H . . . . . fillister head
FM . frequency modulation
FP . . . . . front panel
FREQ . . . . . frequency
FXD . . . . . fixed
g . . . . . gram
GE . . . . . germanium
GHz . . . . . gigahertz
GL . . . . . glass
GRD . . . . . ground(ed)
H . . . . . henry
h . . . . . hour
HET . . . . . heterodyne
HEX . . . . . hexagonal
HD . . . . . head
HDW . . . . . hardware
HF . . . . . high frequency
HG . . . . . mercury
HI . . . . . high
HP . . . . . Hewlett-Packard
HPF. . . . . high pass filter
HR . . . . . hour (used in parts list)
HV . . . . . high voltage
Hz . . . . . Hertz
IC. . . . . integrated circuit
ID. . . . . inside diameter
IF . . . . . intermediate frequency
IMPG. . . . . impregnated
in . . . . . inch
INCD. . . . . incandescent
INCL . . . . . include(s)
INP. . . . . input
INS . . . . . insulation
INT. . . . . internal
kg . . . . . kilogram
kHz . . . . . kilohertz
kΩ . . . . . kilohm
kV . . . . . kilovolt
lb . . . . . pound
LC . . . . . inductance-capacitance
LED . . light-emitting diode
LF . . . . . low frequency
LG . . . . . long
LH . . . . . left hand
LIM. . . . . limit
LIN. . . . linear taper (used in parts list)
lin . . . . . linear
LK WASH . . . lock washer
LO . . . low; local oscillator
LOG . . . logarithmic taper (used in parts list)
log . . . . . logarithm(ic)
LPF. . . . . low pass filter
LV . . . . . low voltage
m . . . . . meter (distance)
mA . . . . . milliampere
MAX . . . . . maximum
MΩ . . . . . megohm
MEG . . . . meg (10^6) (used in parts list)
MET FLM . . . . metal film
MET OX . . . metallic oxide
MF . . . medium frequency; microfarad (used in parts list)
MFR . . . . . manufacturer
mg . . . . . milligram
MHz . . . . . megahertz
mH . . . . . millihenry
mho . . . . . mho
MIN . . . . . minimum
min . . . . . minute (time)
. . . . . minute (plane angle)
MINAT. . . . . miniature
mm . . . . . millimeter
MOD . . . . . modulator
MOM . . . . . momentary
MOS . . . . . metal-oxide semiconductor
ms . . . . . millisecond
MTG . . . . . mounting
MTR . . . meter (indicating device)
mV . . . . . millivolt
mVac . . . . . millivolt, ac
mVdc . . . . . millivolt, dc
mVpk . . . . millivolt, peak
mVp-p . . . millivolt, peak-to-peak
mVrms . . . . millivolt, rms
mW . . . . . milliwatt
MUX . . . . . multiplex
MY . . . . . mylar
μA . . . . . microampere
μF. . . . . microfarad
μH . . . . . microhenry
μmho. . . . . micromho
μs . . . . . microsecond
μV . . . . . microvolt
μVac . . . . . microvolt, ac
μVdc . . . . . microvolt, dc
μVp-p . . . microvolt, peak-to-peak
μVrms . . . . microvolt, rms
μW . . . . . microwatt
nA . . . . . nanoampere
NC . . . . . no connection
N/C . . . . . normally closed
NE . . . . . neon
NEG . . . . . negative
nF . . . . . nanofarad
NI PL . . . . . nickel plate
N/O . . . . . normally open
NOM . . . . . nominal

NOTE

All abbreviations in the parts list will be in upper-case.

Table 5-1. Reference Designators and Abbreviations (continued)

NORM . . . . . normal
NPN . . . negative-positive-negative
NPO . . . . negative-positive zero (zero temperature coefficient)
NRFR . . not recommended for field replacement
NSR . . . . . not separately replaceable
ns . . . . . nanosecond
nW . . . . . nanowatt
OBD . order by description
OD . . . . outside diameter
OH . . . . . oval head
OP AMPL . . . . operational amplifier
OPT . . . . . option
OSC . . . . . oscillator
OX . . . . . oxide
oz . . . . . ounce
Ω . . . . . ohm
P . . . . peak (used in parts list)
PAM . . . . pulse-amplitude modulation
PC . . . . . printed circuit
PCM . . pulse-code modulation; pulse-count modulation
PDM . . . . . pulse-duration modulation
pF . . . . . picofarad
PH BRZ . phosphor bronze
PHL . . . . . Phillips
PIN . . . . positive-intrinsic-negative
PIV . . . . . peak inverse voltage
pk . . . . . peak
PL . . . . . phase lock
PLO . . . . . phase lock oscillator
PM . . . . phase modulation
PNP . . . . positive-negative-positive
P/O . . . . . part of
POLY . . . . . polystyrene
PORC . . . . . porcelain
POS . . positive; position(s) (used in parts list)
POSN . . . . . position
POT . . . . . potentiometer
p-p . . . . . peak-to-peak
PP . . . peak-to-peak (used in parts list)
PPM . . . . . pulse-position modulation
PREAMPL . . . preamplifier
PRF . . . . pulse-repetition frequency
PRR . . . . pulse repetition rate
ps . . . . . picosecond
PT . . . . . point
PTM . . . . . pulse-time modulation
PWM . . . . . pulse-width modulation
PWV . . . . . peak working voltage
RC . resistance-capacitance
RECT . . . . . rectifier
REF . . . . . reference
REG . . . . . regulated
REPL . . . . . replaceable
RF . . . . . radio frequency
RFI . . . . . radio frequency interference
RH . . . . round head; right hand
RLC . . . . . resistance-inductance-capacitance
RMO . . . rack mount only
rms . . . . root-mean-square
RND . . . . . round
ROM . . read-only memory
R&P . . . . . rack and panel
RWV . . . . reverse working voltage
S . . . scattering parameter
s . . . . . second (time)
" . . second (plane angle)
S-B . . . . . slow-blow (fuse) (used in parts list)
SCR . . . silicon controlled rectifier; screw
SE . . . . . selenium
SECT . . . . . sections
SEMICON . . . . . semiconductor
SHF . . . . . superhigh frequency
SI . . . . . silicon
SIL . . . . . silver
SL . . . . . slide
SNR . . signal-to-noise ratio
SPDT . . . . . single-pole, double-throw
SPG . . . . . spring
SR . . . . . split ring
SPST . . . . . single-pole, single-throw
SSB . . . . single sideband
SST . . . . . stainless steel
STL . . . . . steel
SQ . . . . . square
SWR . . standing-wave ratio
SYNC . . . . . synchronize
T . . timed (slow-blow fuse)
TA . . . . . tantalum
TC . . . . . temperature compensating
TD . . . . . time delay
TERM . . . . . terminal
TFT . . thin-film transistor
TGL . . . . . toggle
THD . . . . . thread
THRU . . . . . through
TI . . . . . titanium
TOL . . . . . tolerance
TRIM . . . . . trimmer
TSTR . . . . . transistor
TTL . . transistor-transistor logic
TV . . . . . television
TVI television interference
TWT . . traveling wave tube
U . . . . micro (10^6) (used in parts list)
UF . . . microfarad (used in parts list)
UHF . . ultrahigh frequency
UNREG . . . . unregulated
V . . . . . volt
VA . . . . . voltampere
Vac . . . . . volts, ac
VAR . . . . . variable
VCO . . . voltage-controlled oscillator
Vdc . . . . . volts, dc
VDCW . . volts, dc, working (used in parts list)
V(F) . . . . . volts, filtered
VFO . . variable-frequency oscillator
VHF . . . . . very-high frequency
Vpk . . . . . volts, peak
Vp-p . . volts, peak-to-peak
Vrms . . . . . volts, rms
VSWR . . . voltage standing wave ratio
VTO . . . . . voltage-tuned oscillator
VTVM . . . . Vacuum-tube voltmeter
V(X) . . . . . volts, switched
W . . . . . watt
W . . . . . with
WIV . . . . working inverse voltage
WW . . . . . wirewound
W/O . . . . . without
YIG . . yttrium-iron-garnet
Z_o . . . . . characteristic impedance

MULTIPLIERS

Abbreviation	Prefix	Multiple
T	tera	10^{12}
G	giga	10^{9}
M	mega	10^{6}
k	kilo	10^{3}
da	deka	10
d	deci	10^{-1}
c	centi	10^{-2}
m	milli	10^{-3}
μ	micro	10^{-6}
n	nano	10^{-9}
p	pico	10^{-12}
f	femto	10^{-15}
a	atto	10^{-18}

NOTE

All abbreviations in the parts list will be in upper-case.

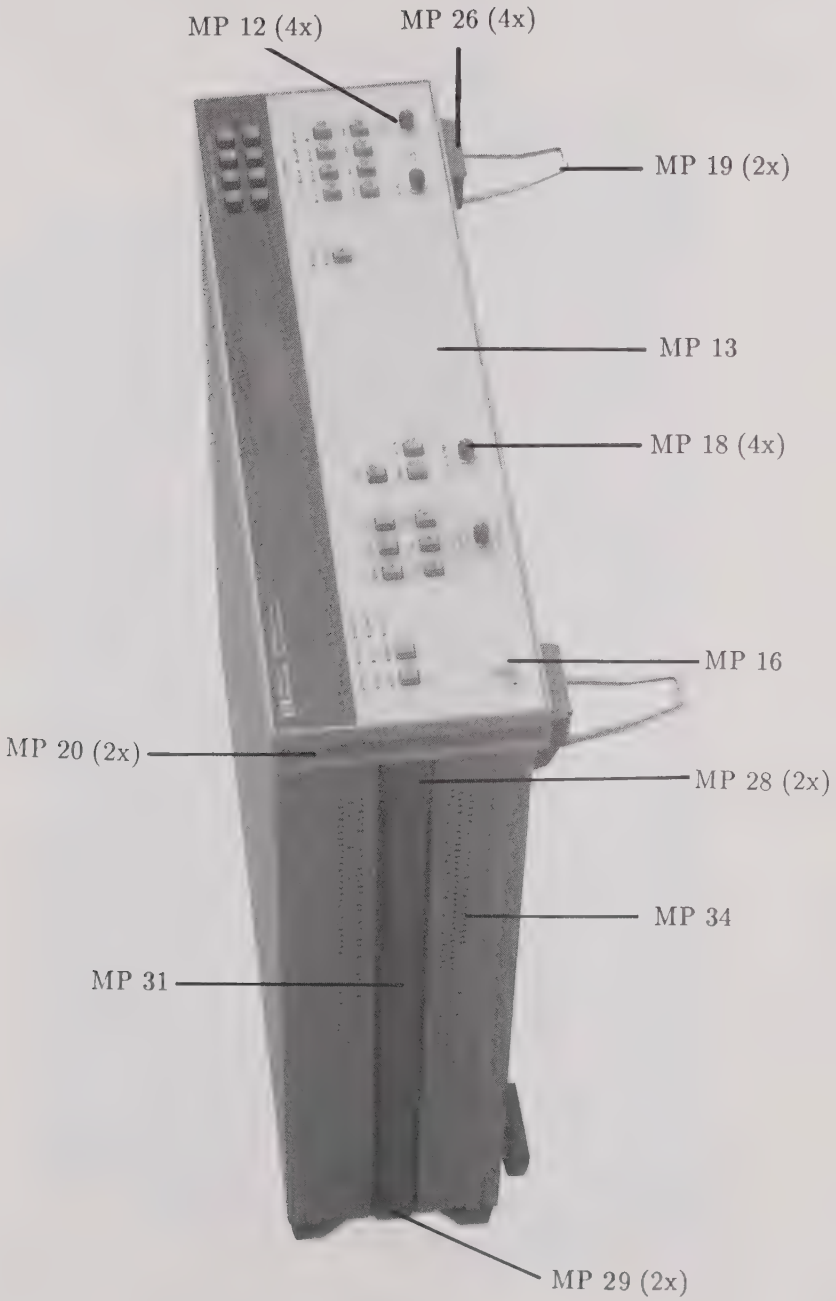

Figure 5-1. Parts Identification

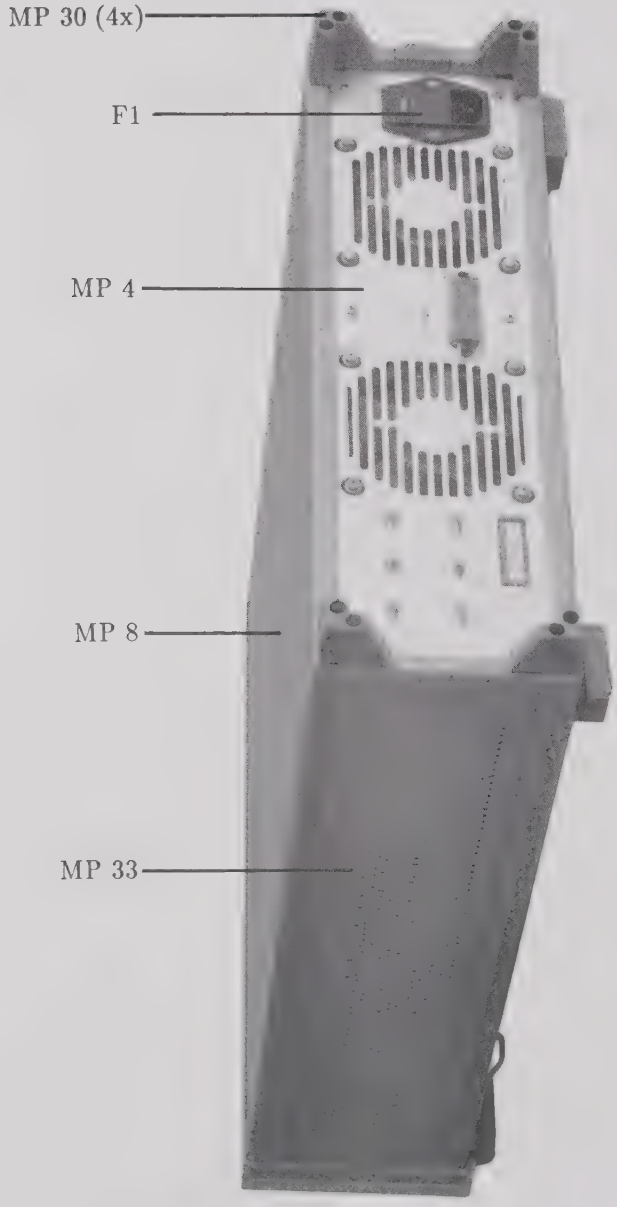

Figure 5-2. Parts Identification

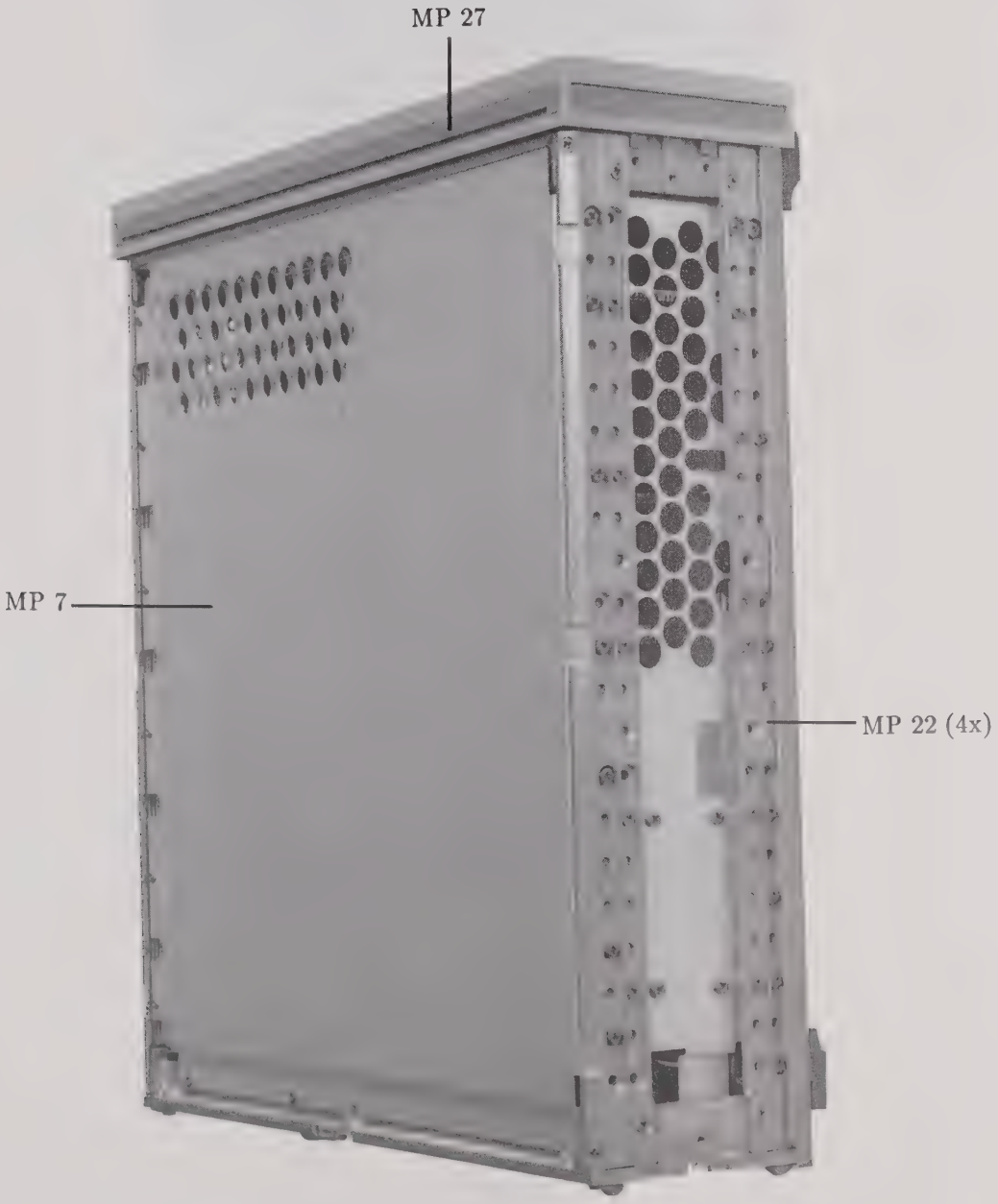

Figure 5-3. Parts Identification

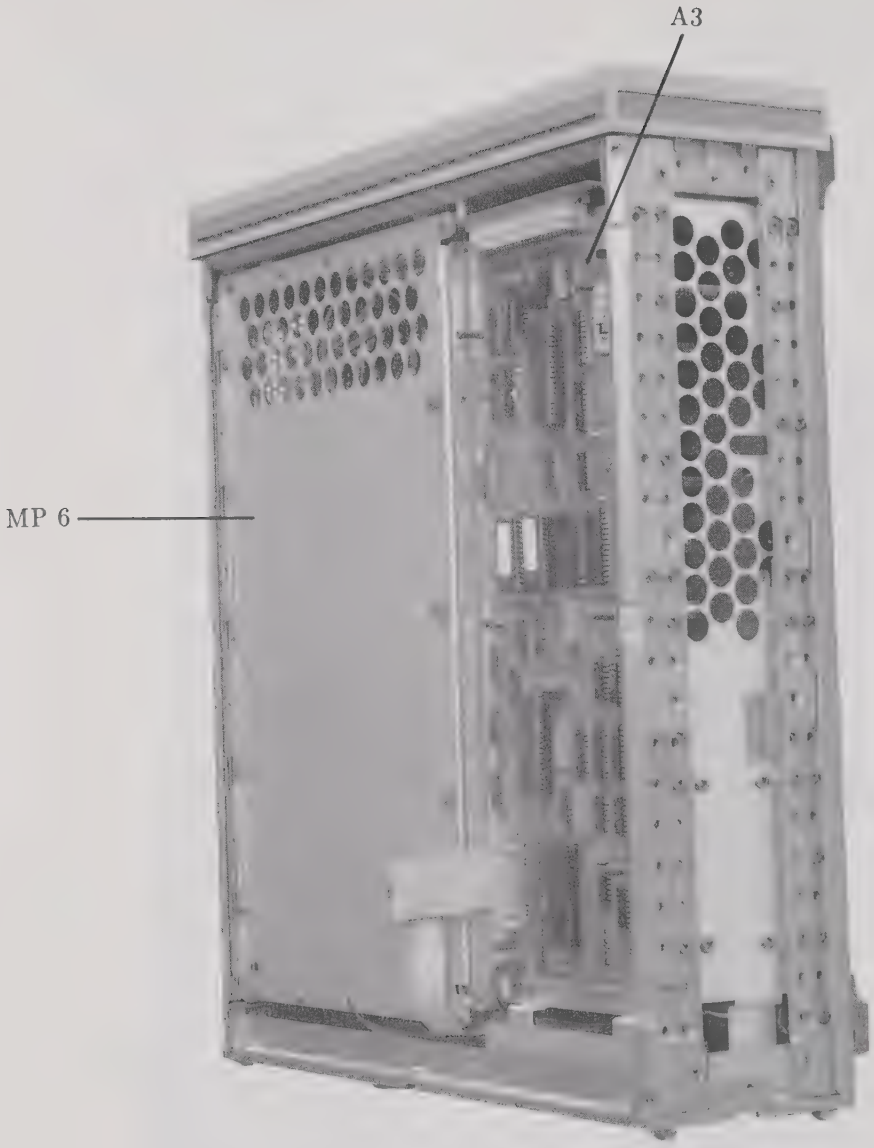

Figure 5-4. Parts Identification

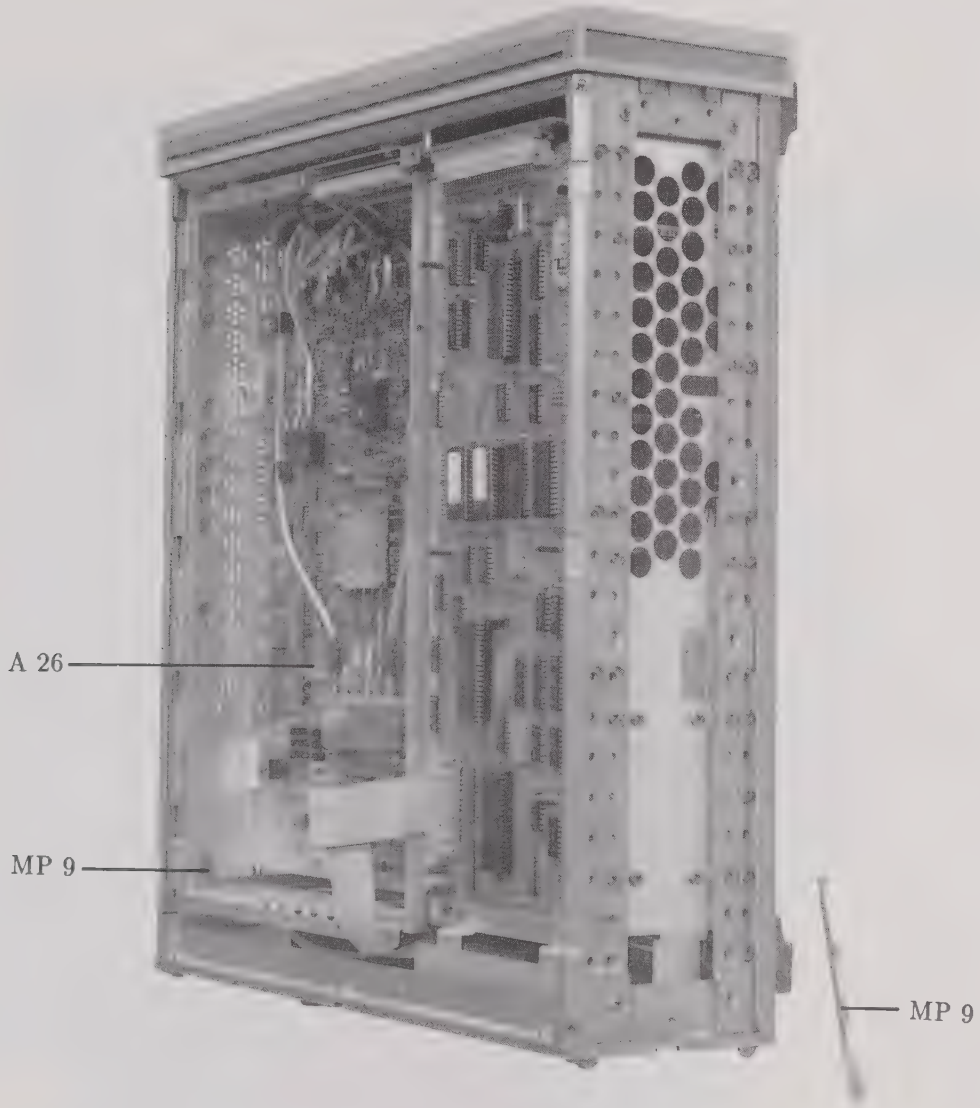

Figure 5-5. Parts Identification

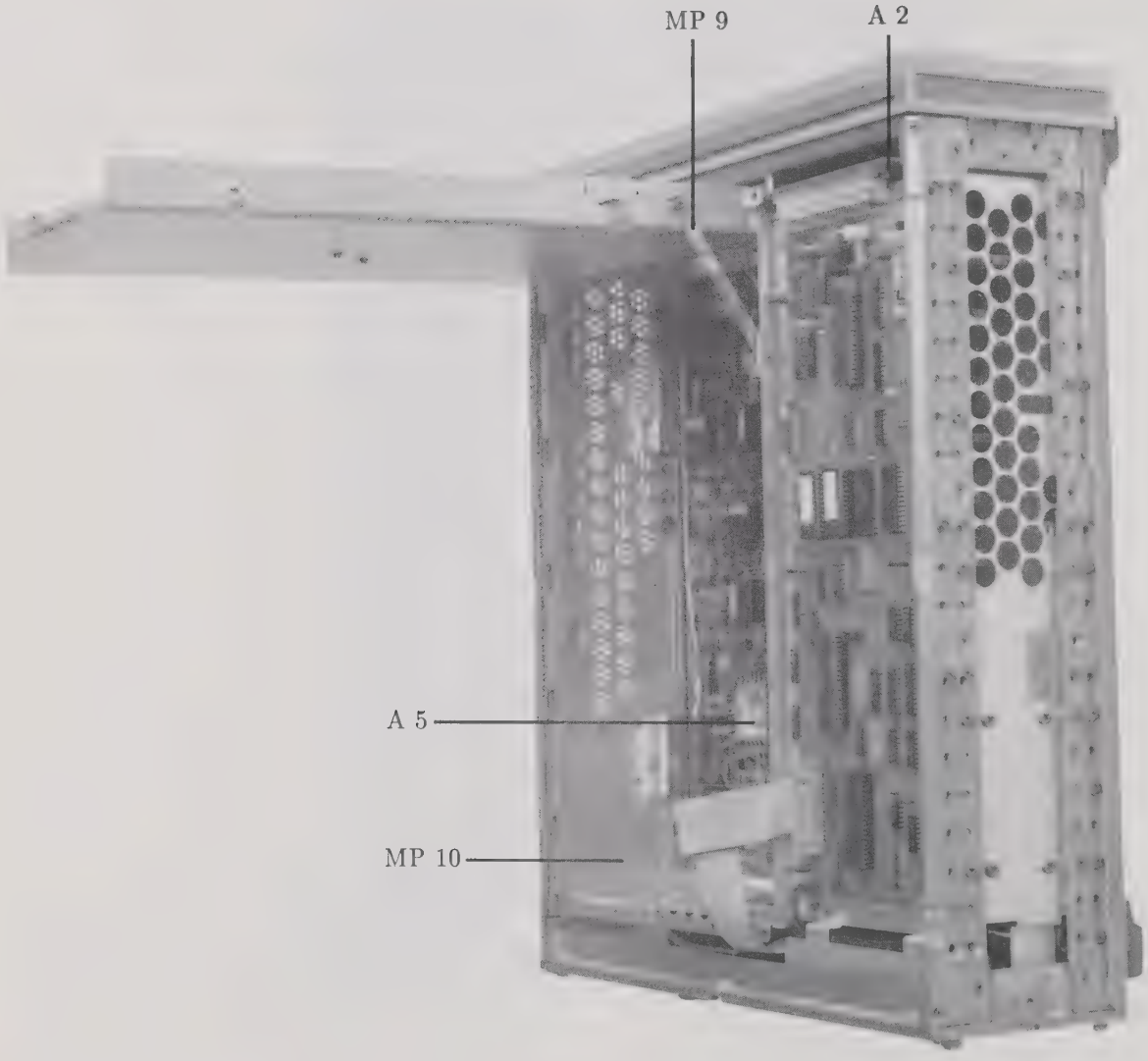

Figure 5-6. Parts Identification

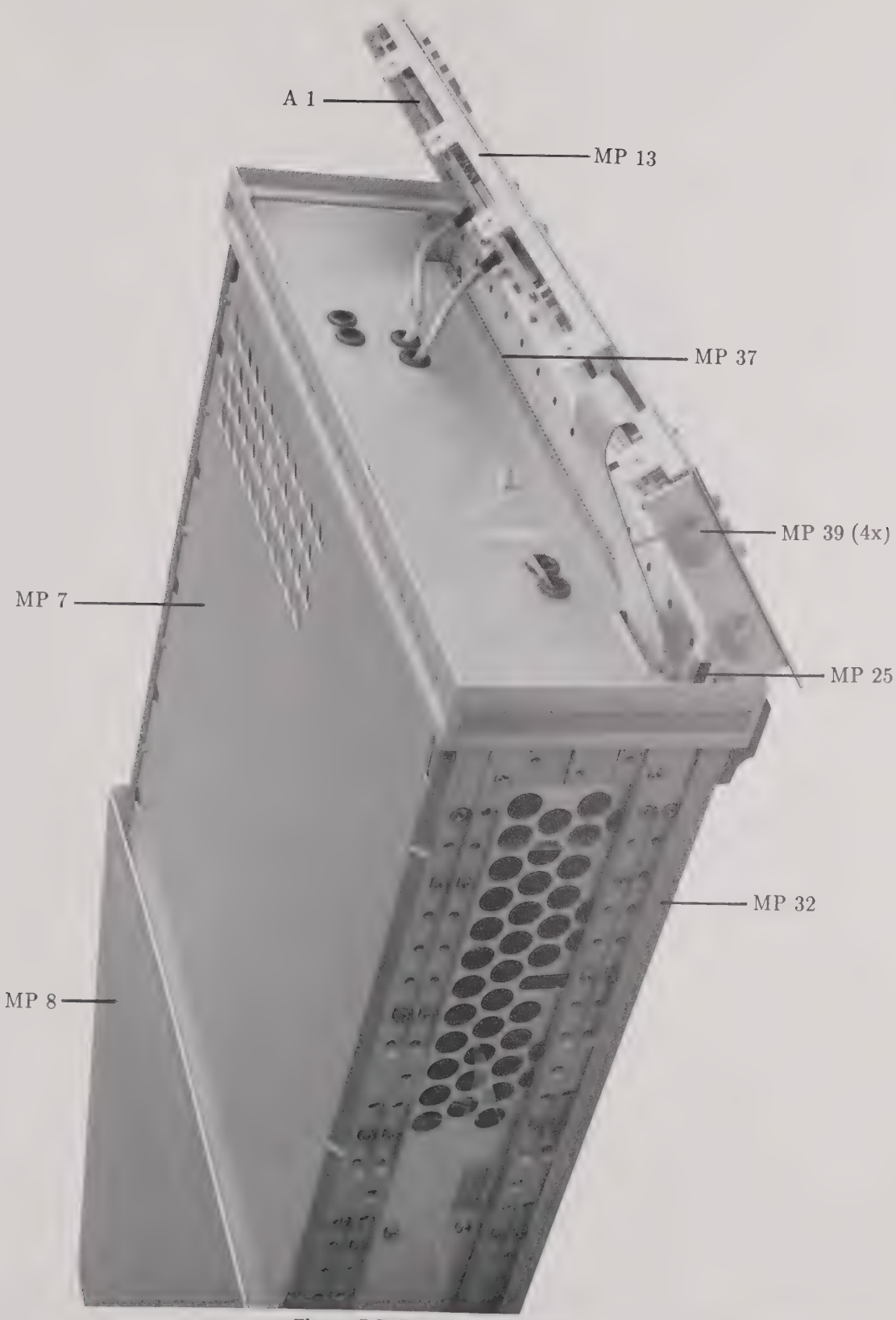

Figure 5-7. Parts Identification

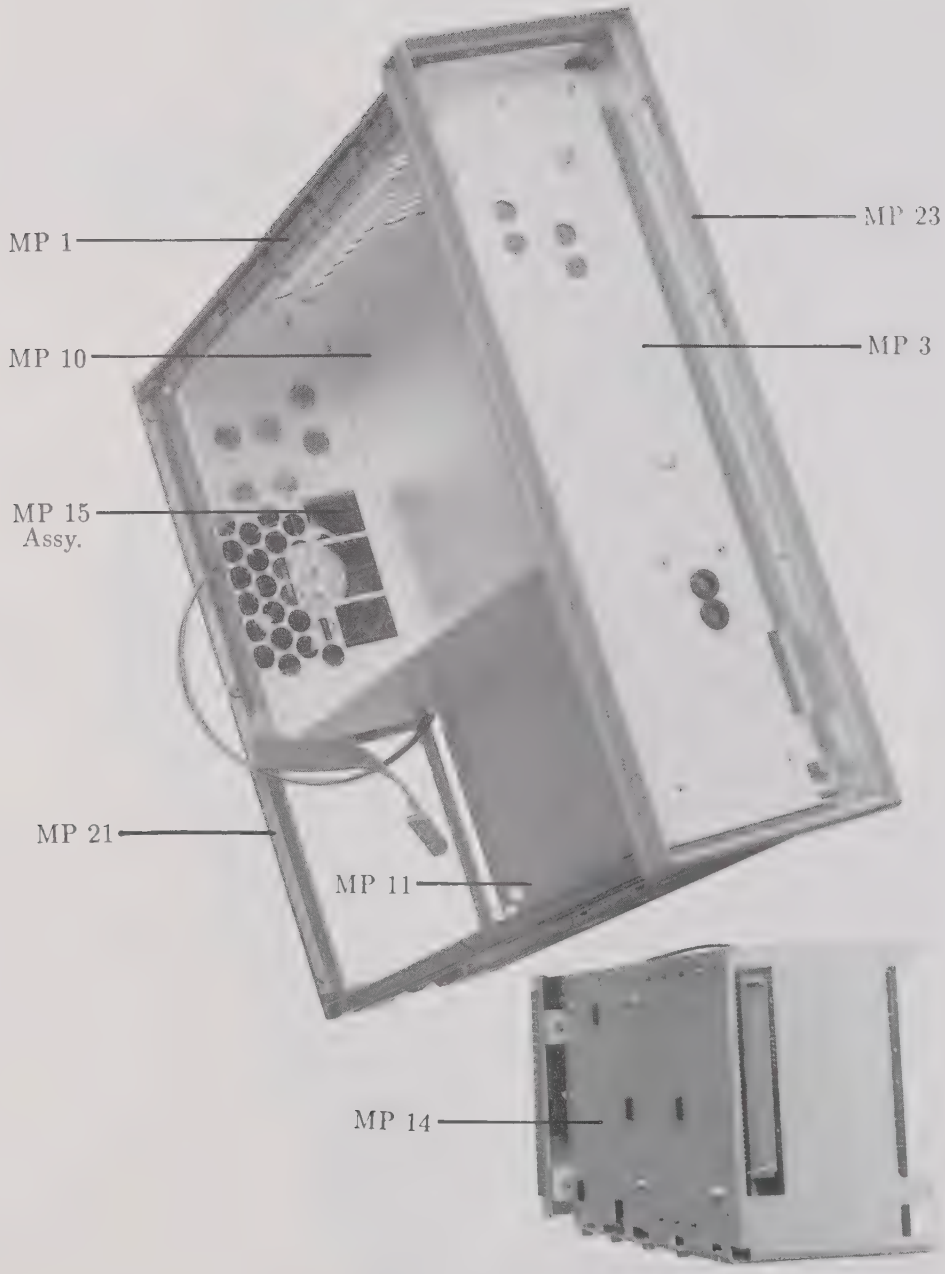

Figure 5-8. Parts Identification

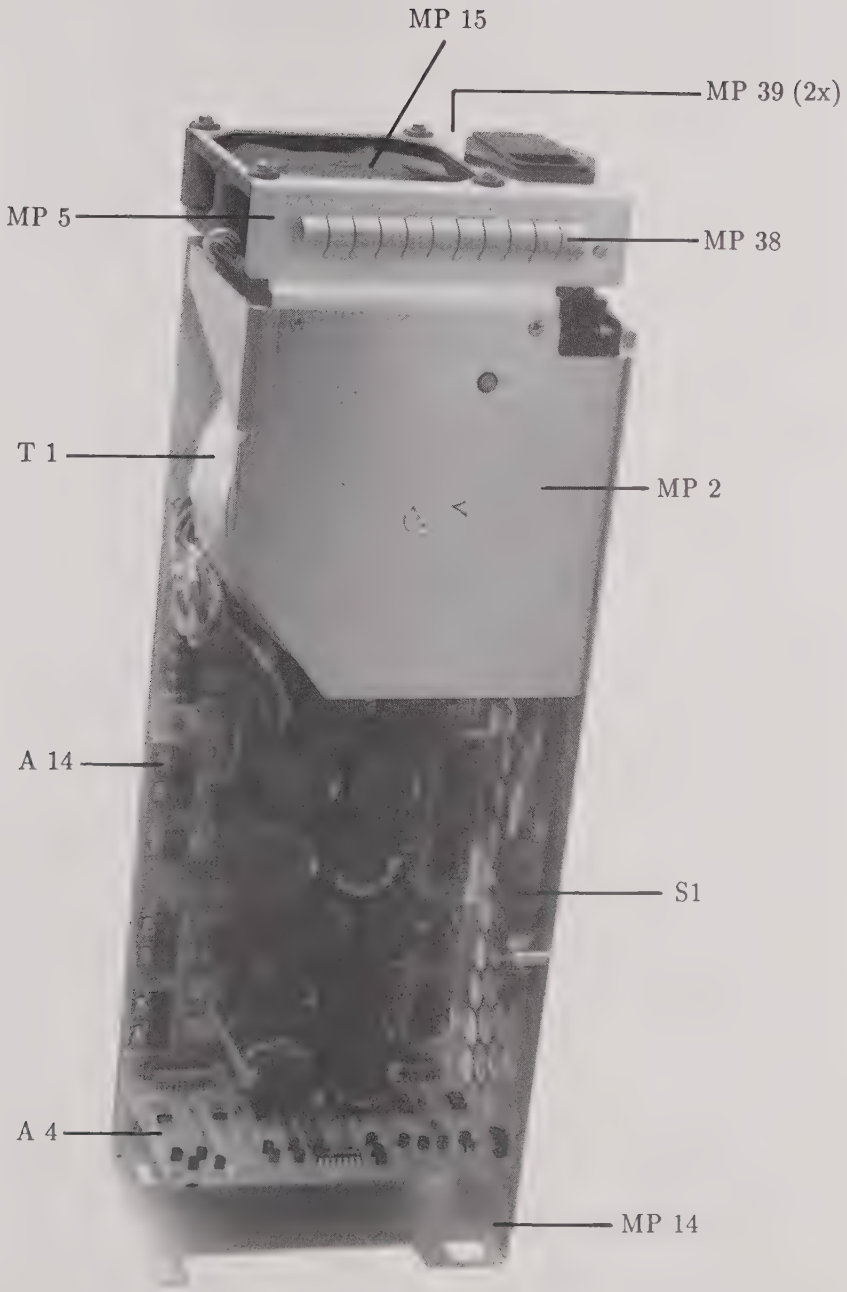

Figure 5-9. Parts Identification

Table 5-2. Replaceable Parts

Reference Designator	Part Description	HP 8130A Part Number	HP 8131A Part Number
W10-W13	Cable assy, Output	08130-61603	08131-61603
W3/W4	Cable assy, Trig Out	08130-61604	08131-61604
W5	Cable assy, Ext Inp	08130-61605	08131-61605
W6	Cable assy, Trigger Int		08131-61651
W1	Cable assy, HPIB	5180-2462	5180-2462
	Label, CAUTION	08131-44301	08131-44301
	Partition Set	08131-49301	08131-49301
	Plate, corrugated	08131-49302	08131-49302
	Bumper Foot	0403-0374	0403-0374
	Adhesive, (bumper foot)	0403-0285	0403-0285
A1	Board Assy, Key Std.	08130-66501	08131-66501
A1	Board Assy, Key (Opt 020)	08130-66521	08131-66521
MP3	Keycap, plain	5041-0309	5041-0309
MP4	Keycap, green	5041-0507	5041-0507
MP5	Keycap, LCL	5041-0726	5041-0726
MP1	Keycap, vernier	5041-4707	5041-4707
MP2	Keycap, lit	5041-0318	5041-0318
	LED Lamp	1990-1254	1990-1254
	Key switch, single	5060-9436	5060-9436
	7-segment Display	1990-1253	1990-1253
	LED light bar	1990-1252	1990-1252
	LED lamp	1990-1278	1990-1278
A2	Board Assy, Mother	08131-66502	08131-66502
	Connector, Din type	1252-0027	1252-0027
W1	Cable to Keyboard	08131-61601	08131-61601
	EMI fingers	8160-0392	8160-0392
A3	Board Assy, UPCR (CPU)	08130-66503	08131-66503
	EPROM 1 (U204)	08130-13701	08131-13707
	EPROM 2 (U205)	08130-13702	08131-13708
	LED Green	1990-0485	1990-0485
A4	Board, Power Control	08131-66504	08131-66504

Table 5-2. Replaceable Parts (continued)

Reference Designator	Part Description	HP 8130A Part Number	HP 8131A Part Number
A5	Board, Timing (Std.)	08130-66505	08131-66505
	Board, Timing (Opt 020)	08130-66525	08131-66525
	LED Lamp	1990-1278	1990-1278
A14	Board, Main Power	08131-66514	08131-66514
	Fuse, 10A 125V	2110-0456	2110-0456
S1	Switch 4A/80A	3101-2992	3101-2992
A26	Board, Output 1 (Std.)	08130-66526	08131-66526
A26	Board, Output 1 (Opt. 020)		08131-66527
A27	Board, Output 2 (Opt. 020)	08130-66527	
A28	Board, Output 2 (Opt. 020)		08131-66528
	Switch, SMA Co-ax	0955-0452	0955-0452
F1	Fuse, 3 A, 250 V	2110-0029	2110-0029
	Fuse, 1.5 A	2110-0304	2110-0304
MP1	Chassis, main	08130-00101	08131-00101
MP2	Angle, power	08131-00111	08131-00111
MP3	Sub Panel	08130-00202	08131-00202
MP4	Rear Panel	08130-00203	08131-00203
MP5	Bracket, fan	08131-01212	08131-01212
MP6	Cover, top Cardcage	08130-04101	08131-04101
MP7	Cover, top Cabinet	08131-04102	08131-04102
MP8	Cover, top Instrument	08131-04103	08131-04103
MP9	Board Keeper	08131-04107	08131-04107
MP10	Card Cage	08131-04501	08131-04501
MP13	Front Panel Std.	08130-40204	08131-40204
MP13	Front Panel Opt 020	08130-40201	08131-40201
MP14	Cage assy., Pwr	08131-60110	08131-60110
MP15	Fan Assembly	08131-68502	08131-68502
MP16	Key Cap (ON/OFF)	08180-47401	08180-47401
MP18	Cap Protective, Outp Connectors		1401-0202
MP19	Tilt Stand	1460-1345	1460-1345
MP20	Side Trim	5001-0539	5001-0539
MP21	Frame, rear	5021-5804	5021-5804
MP22	Strut, corner	5021-5837	5021-5837
MP23	Frame Front	5021-8403	5021-8403
MP24	Sleeve-blue	5040-0478	5040-0478
MP25	Shaft, power switch	5040-9319	5040-9319
MP26	Foot	5041-8801	5041-8801

Table 5-2. Replaceable Parts (continued)

Reference Designator	Part Description	HP 8130A Part Number	HP 8131A Part Number
MP27	Trim Strip, top	5041-8802	5041-8802
MP30	Foot, rear	5041-8821	5041-8821
MP31	Strap, handle	5062-3704	5062-3704
MP32	Cover, bottom	5062-3747	5062-3747
MP33	Cover, side, right	5062-3812	5062-3812
MP34	Cover, side, left	5062-3837	5062-3837
MP35	Button, plug	6960-0006	6960-0006
MP36	Label, Ground	7120-6153	7120-6153
MP39	EMI Fingers	8160-0392	8160-0392

Table 5-3. HP 8130A Exchange Items

Board Assy Part No.	Description	Exchange Assy Part No.
08130-66501	Keyboard assy Std.	component repair
08131-66502	Mother board assy.	throw away item
08130-66503	CPU board assy.	08130-69503
08131-66504	Pwr supply control bd. assy.	component repair
08130-66505	Timing board assy. Std.	08130-69505
08131-66514	Pwr supply main bd. assy.	component repair
08130-66521	Keyboard assy Opt. 020	component repair
08130-66525	Timing board assy. Opt. 020	08130-69525
08130-66526	Output board assy. Std. or Bd1	08130-69526
08130-66527	Output board assy. Opt. 020 (Bd2)	08130-69527

Table 5-4. HP 8131A Exchange Items

Board Assy Part No.	Description	Exchange Assy Part No.
08131-66501	Keyboard assy Std.	component repair
08131-66502	Mother board assy.	throw away item
08131-66503	CPU board assy.	08131-69503
08131-66504	Pwr supply control bd. assy.	component repair
08131-66505	Timing board assy. Std.	08131-69505
08131-66514	Pwr supply main bd. assy.	component repair
08131-66521	Keyboard assy Opt. 020	component repair
08131-66525	Timing board assy. Opt. 020	08131-69525
08131-66526	Output board assy. Std. (Bd1)	08131-69526
08131-66527	Output board assy. Opt. 020 (Bd1)	08131-69527
08131-66528	Output board assy. Opt. 020 (Bd2)	08131-69528

BLOCK DIAGRAM IDENTIFIER

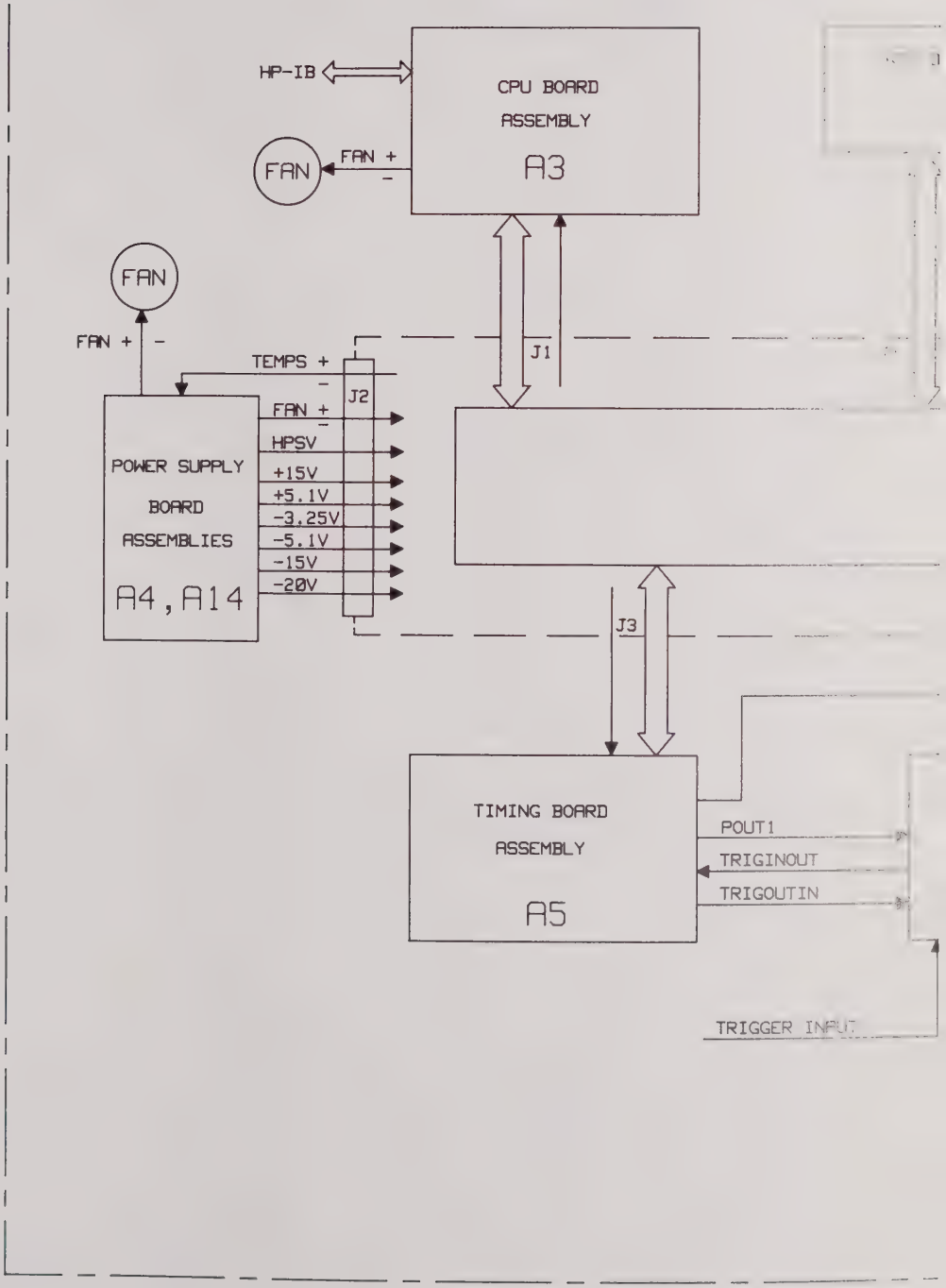

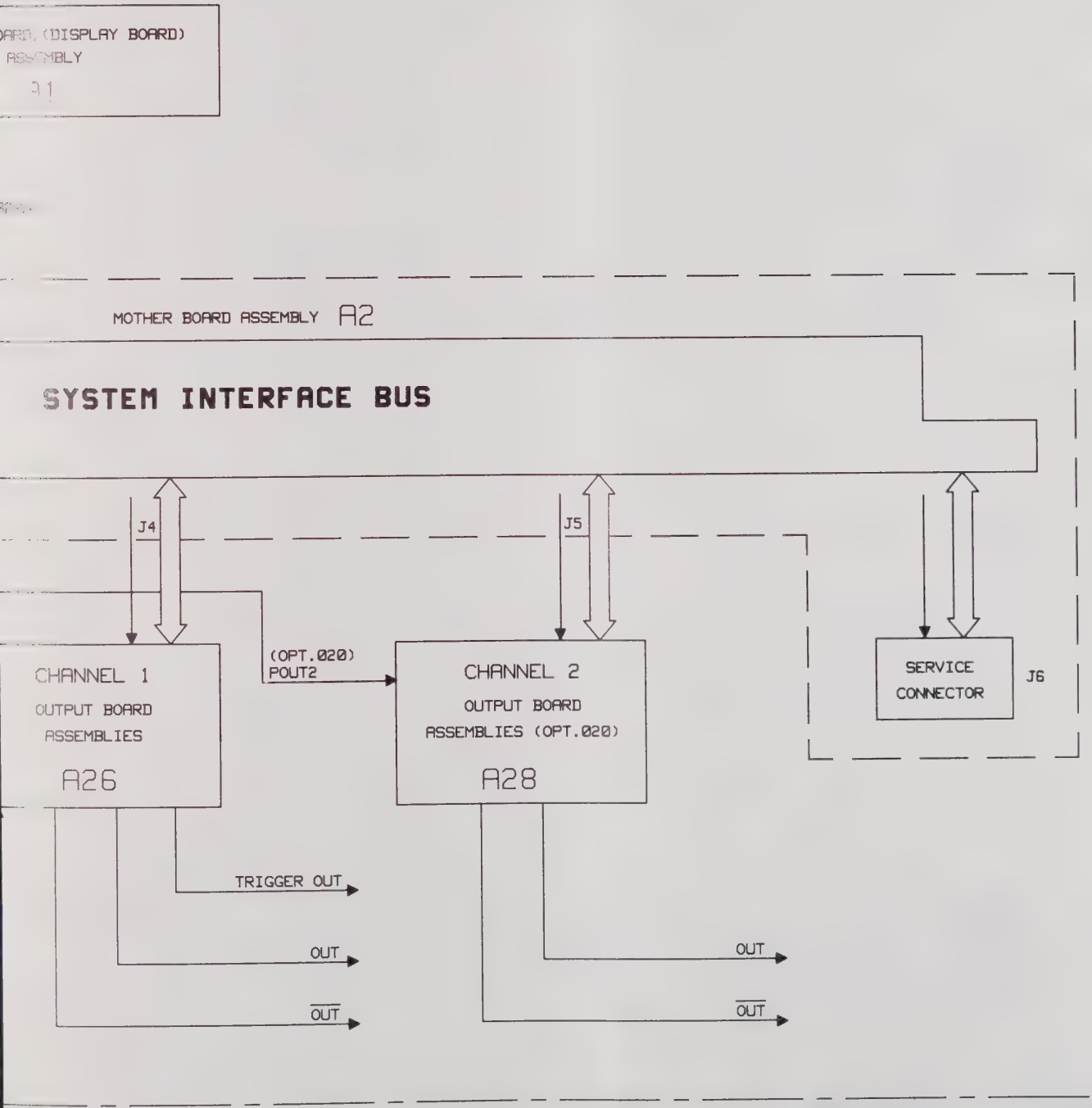

MODEL HP8131A FIGURE 6.0-3.
IDENTIFIER BLOCK DIAGRAM
INSTRUMENT BLOCK DIAGRAM

BLOCK DIAGRAM IDENTIFIER

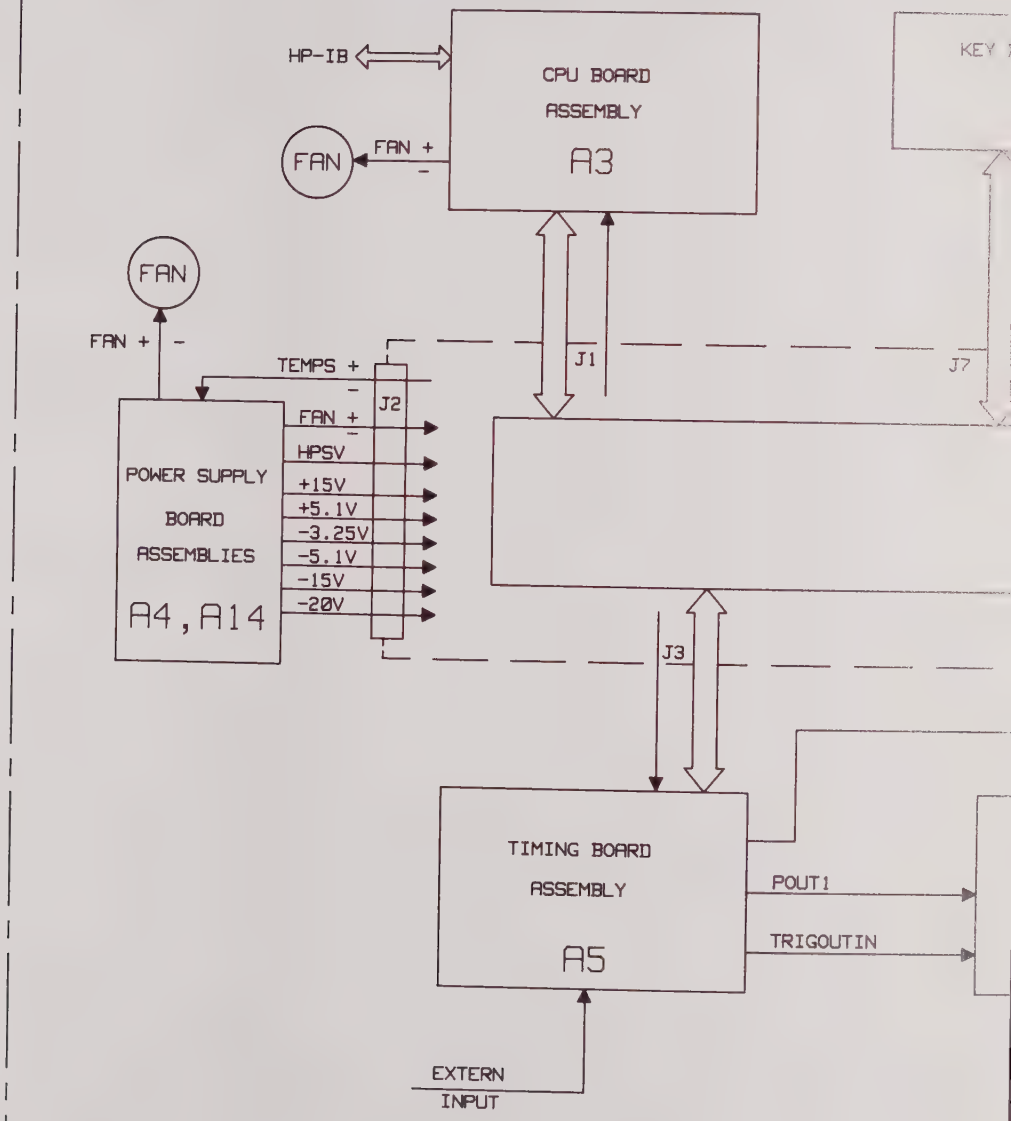

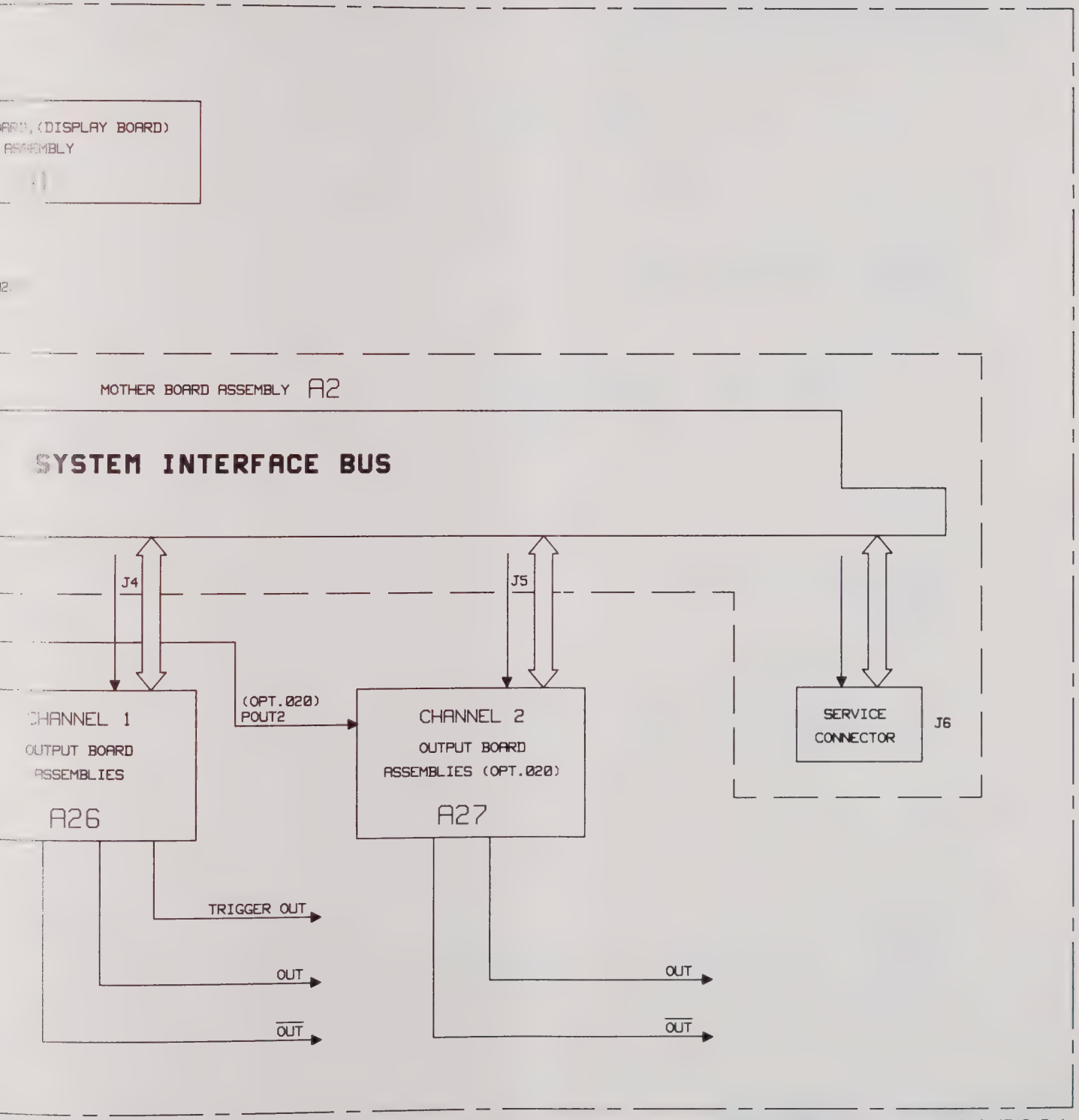

MODEL HP8130A FIGURE 6.0-1.
IDENTIFIER BLOCK DIAGRAM
INSTRUMENT BLOCK DIAGRAM

6-0

Instrument Block Diagrams

General

This chapter contains two overall block diagrams for the HP 8130A/HP 8131A instruments:

- Identifier Block Diagram
- Functional Block Diagram.

The diagrams provide an illustration of the interconnections and relationships, between the main assemblies and with the motherboard bus system.

These block diagrams should be used to assist the isolation of a malfunction to a specific assembly or circuit board. Further location of malfunctions may then continue, by referring to the appropriate subsection of chapter 6 for further details.

Chapter 6 Subsection details

Chapter 6 is subdivided as follows:

- **Chapter 6-0** This chapter
- **Chapter 6-1** Motherboard
- **Chapter 6-2** Power Supply
- **Chapter 6-3** CPU board
- **Chapter 6-4** Timing board
- **Chapter 6-5** HP 8130A Output board
- **Chapter 6-6** HP 8131A Output board
- **Chapter 6-7** Troubleshooting

This page left intentionally blank

6-1

Motherboard (A2)

Motherboard

All boards are interconnected via the motherboard. The connector identities and the devices that they connect to the motherboard, are listed in the table below.

Table 6-1-1. motherboard Connectors

Connector	Device
J1	CPU board
J2	power supply board
J3	timing board - slot 0 (lowest position)
J4	output board, channel 1 - slot 1
J5	output board, channel 2 - slot 2
J6	service connector - slot 3
J7	keyboard

Special Interconnections

- Two lines from the temperature sensor to power supply connector (TEMPS+ and TEMPS−). The temperature sensor is located inside the card cage next to slot 0
- Two lines from the power supply connector to the CPU board connector for the two fans (FAN+ and FAN−).
- One line from the power supply connector to the CPU board connector (HPSV).
- Slot recognition - LCEN on pin 24a of each signal board as follows:
  - slot 0 - LCS0 pin 10a on CPU board
  - slot 1 - LCS1 pin 10c on CPU board
  - slot 2 - LCS2 pin 11a on CPU board
  - slot 3 - LCS3 pin 11c on CPU board
- −3.25V SENS from the power supply connector pin 14c to pin 8a on slots 0 and 3.

Grounds

- DGND - ground for CPU board and keyboard only
- AGND - ground for signal boards:
  - timing board
  - output board channels 1 and 2
  - service connector
- RGND - reference ground for DACs and ADCs on the above signal boards
- SHGND - shield-ground, no current.

DGND, AGND, RGND, and SHGND are commoned on the power supply board.

Voltages

- +5.1 V DIG - for CPU board and keyboard only
- +5.1 V ANA - for signal boards only

+5.1 V DIG and +5.1 V ANA are commoned on the power supply board.

Table 6-1-2. Pin definitions on Motherboard: Signal and Service Connectors

Pin	Row c	Row a
1	NC	NC
2	−20 V	−20 V
3	−15 V	−15 V
4	−15 V	−15 V
5	−5.1 V	−5.1 V
6	−5.1 V	−5.1 V
7	−5.1 V	−5.1 V
8	−3.25 V	−3.25 V SENS
9	−3.25 V	−3.25 V
10	−3.25 V	−3.25 V
11	−3.25 V	−3.25 V
12	AGND	AGND
13	AGND	AGND
14	AGND	AGND
15	AGND	AGND
16	AGND	AGND
17	AGND	AGND
18	AGND	AGND
19	AGND	AGND
20	RGND	RGND
21	+15 V	+15 V
22	+5.1 V ANA	+5.1 V ANA
23	SHGND	SHGND
24	LDRQ	LCEN
25	HDD6	HDD7
26	HDD4	HDD5
27	HDD2	HDD3
28	HDD0	HDD1
29	LRHW	LDBV
30	HDA4	HDA5
31	HDA2	HDA3
32	HDA0	HDA1

Table 6-1-3. Pin definitions on Motherboard: CPU Board Connector

Pin	Row c	Row a
1	HDA1	HDA0
2	HDA3	HDA2
3	HDA5	HDA0
4	LDBV	LRHW
5	HDD1	HDD0
6	HDD3	HDD2
7	HDD5	HDD4
8	HDD7	HDD6
9	HPSV	LDRQ
10	LCS1	LCS0
11	LCS3	LCS2
12	SHGND	SHGND
13	+5.1 V DIG	+5.1 V DIG
14	+5.1 V DIG	+5.1 V DIG
15	+5.1 V DIG	+5.1 V DIG
16	+5.1 V DIG	+5.1 V DIG
17	DGND	DGND
18	DGND	DGND
19	DGND	DGND
20	DGND	DGND
21	FAN−	FAN+
22	NC	NC
23	SL2	SL3
24	SL0	SL1
25	RL6	RL7
26	RL4	RL5
27	RL2	RL3
28	RL0	RL1
29	S6	S7
30	S4	S5
31	S2	S3
32	S0	S1

Table 6-1-4. Pin definitions on Motherboard: Power Supply Connector

Pin	Row c	Row a
1	FAN−	FAN+
2	TEMPS−	TEMPS+
3	NC	NC
4	−20 V	−20 V
5	−20 V	−20 V
6	−15 V	−15 V
7	−15 V	−15 V
8	−5.1 V	−5.1 V
9	−5.1 V	−5.1 V
10	−5.1 V	−5.1 V
11	−3.25 V	−3.25 V
12	−3.25 V	−3.25 V
13	−3.25 V	−3.25 V
14	−3.25 V SENS	−3.25 V
15	AGND	AGND
16	AGND	AGND
17	AGND	AGND
18	AGND	AGND
19	AGND	AGND
20	AGND	AGND
21	AGND	AGND
22	AGND	AGND
23	AGND	AGND
24	RGND	RGND
25	DGND	DGND
26	DGND	DGND
27	+5.1 V DIG	+5.1 V DIG
28	+5.1 V DIG	+5.1 V DIG
29	+5.1 V ANA	+5.1 V ANA
30	+5.1 V ANA	+5.1 V ANA
31	+5.1 V	+5.1 V
32	+5.1 V	+5.1 V

Table 6-1-5. Pin definitions on Motherboard: Power Supply Connector

Pin	Row a
1	S0
2	S1
3	S2
4	S3
5	S4
6	S5
7	S6
8	S7
9	RL0
10	RL1
11	RL2
12	RL3
13	RL4
14	RL5
15	RL6
16	RL7
17	SL0
18	SL1
19	SL2
20	SL3
21	DGND
22	DGND
23	+5.1 V DIG
24	+5.1 V DIG
25	SHGND
26	SHGND

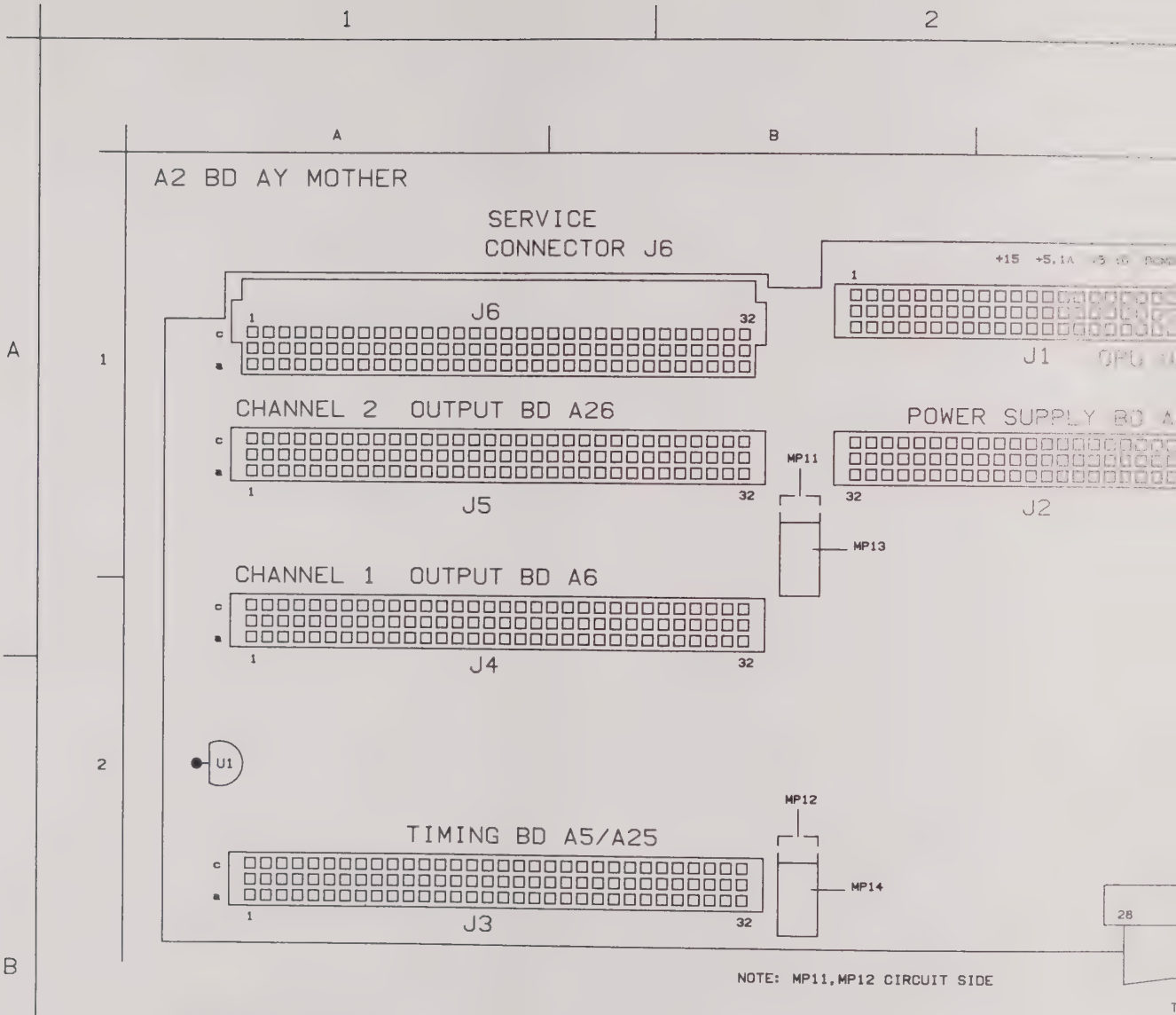

REF. DES.	GRID LOC.	REF. DES.	GRID LOC.
J1	C1	MP11	B1
J2	C1	MP12	B2
J3	A2	MP13	B1
J4	A1	MP14	B2
J5	A1		
J6	A1	U1	A2
J7	C2	W7	B2

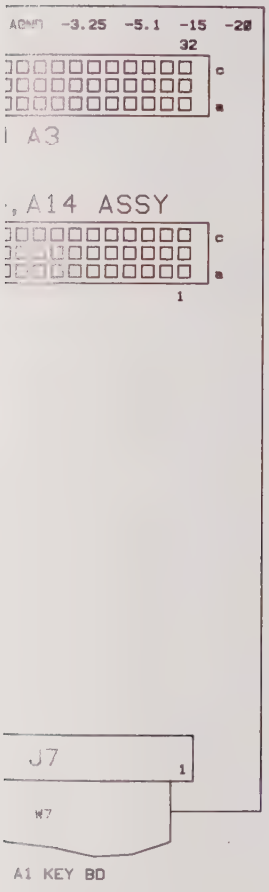

SIGNAL + SERVICE CONN.
A5/A6/A26 J3 - J6

PIN	c	a
1	N.C.	N.C.
2	-20V	-20V
3	-15V	-15V
4	-15V	-15V
5	-5.1V	-5.1V
6	-5.1V	-5.1V
7	-5.1V	-5.1V
8	-3.25V	-3.25VSENSE
9	-3.25V	-3.25V
10	-3.25V	-3.25V
11	-3.25V	-3.25V
12	AGND	AGND
13	:	:
14	:	:
15	:	:
16	:	:
17	:	:
18	:	:
19	AGND	AGND
20	RGND	RGND
21	+15V	+15V
22	+5.1VANA	+5.1VANA
23	SHGND	SHGND
24	LDRQ	LCEN
25	HDD6	HDD7
26	HDD4	HDD5
27	HDD2	HDD3
28	HDD0	HDD1
29	LRHW	LDBV
30	HDA4	HDA5
31	HDA2	HDA3
32	HDA0	HDA1

POWER SUPPLY BOARD
A4/A14 J2

PIN	a	c
1	FAN+	FAN-
2	TEMPS+	TEMPS-
3	N.C.	HPSV
4	-20V	-20V
5	-20V	-20V
6	-15V	-15V
7	-15V	-15V
8	-5.1V	-5.1V
9	-5.1V	-5.1V
10	-5.1V	-5.1V
11	-3.25V	-3.25V
12	-3.25V	-3.25V
13	-3.25V	-3.25V
14	-3.25V	-3.25VSENS
15	AGND	AGND
16	:	:
17	:	:
18	:	:
19	:	:
20	:	:
21	:	:
22	:	:
23	AGND	AGND
24	RGND	SHGND
25	DGND	DGND
26	DGND	DGND
27	+5.1DIG	+5.1VDIG
28	+5.1DIG	+5.1VDIG
29	+5.1VANA	+5.1VANA
30	+5.1VANA	+5.1VANA
31	+15V	+15V
32	+15V	+15V

CPU BOARD
A3 J1

PIN	a	c
32	S1	S0
31	S3	S2
30	S5	S4
29	S7	S6
28	RL1	RL0
27	RL3	RL2
26	RL5	RL4
25	RL7	RL6
24	SL1	SL0
23	SL3	SL2
22	N.C.	N.C.
21	FAN+	FAN-
20	DGND	DGND
19	:	:
18	:	:
17	:	:
16	+5.1VDIG	+5.1VDIG
15	:	:
14	:	:
13	+5.1VDIG	+5.1VDIG
12	SHGND	SHGND
11	LCS2	LCS3
10	LCS0	LCS1
9	LDRQ	HPSV
8	HDD6	HDD7
7	HDD4	HDD5
6	HDD2	HDD3
5	HDD0	HDD1
4	LRHW	LDBV
3	HDA4	HDA5
2	HDA2	HDA3
1	HDA0	HDA1

KEY BOARD
A1 J7

PIN	
1	S0
2	S1
3	S2
4	S3
5	S4
6	S5
7	S6
8	S7
9	RL0
10	RL1
11	RL2
12	RL3
13	RL4
14	RL5
15	RL6
16	RL7
17	SL0
18	SL1
19	SL2
20	SL3
21	DGND
22	DGND
23	+5.1VDIG
24	+5.1VDIG
25	SHGND
26	SHGND

2

MODEL HP8131A
FIGURE 6.1-1.
MOTHERBOARD COMPONENT LAYOUT

6-2

Power Supply (A14)

Introduction

The power supply operates as an analog series regulator. Its main features are:

- primary 4-voltage tapping transformer
- additional secondary tapping, twice at each output level
- Schottky power rectifiers
- power MOSFETs with low resistance when on.

Block Theory of Operation

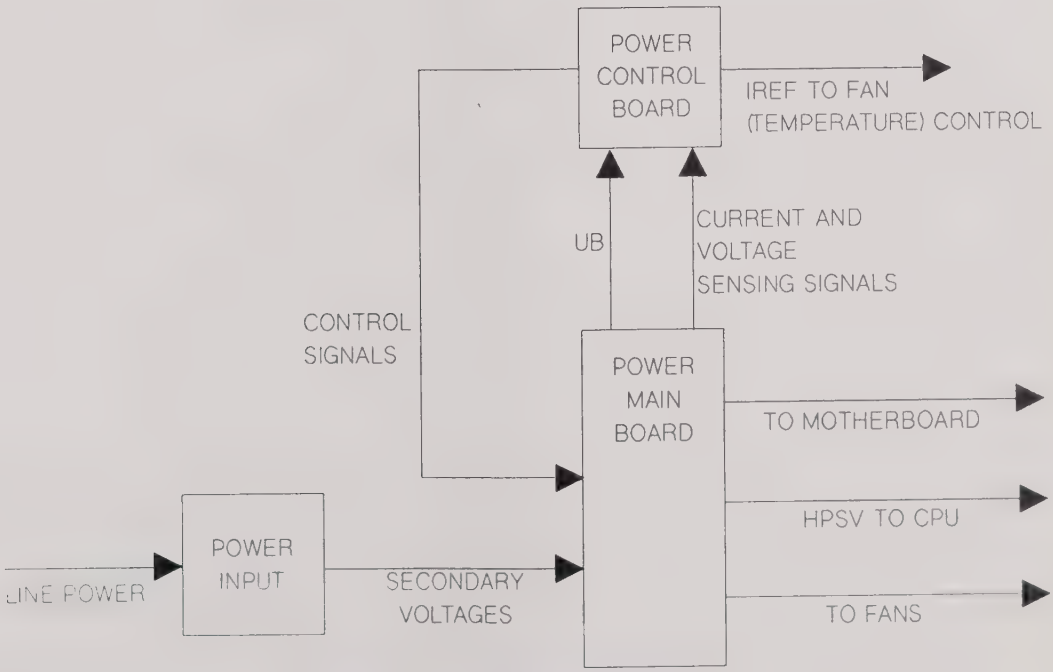

Figure 6-2-1. Modular Block Diagram

The following paragraphs contain basic block level theory of operation. A more detailed theory of operation follows after this section.

The power supply consists of three functional blocks:

- power input that includes a 50/60 Hz transformer
- power main board
- power control board.

Power Input

This block is responsible for:

- filtering the line voltage
- fusing
- selection
- on/off switching
- transforming the primary voltages to secondary voltage levels.

Power Main Board

This block is responsible for:

- rectification
- filtering
- series regulation of all secondary voltages and transmitting them to the motherboard
- generating the voltage and current sensing signals
- generating the control power +UB and transmitting it to the power control board
- fan control circuit
- power-on reset circuit which generates the HPSV signal to reset the MPU.

Power Control Board

This board is supplied from the power main board with:

- the control power +UB
- the voltage and current sensing signals.

It is responsible for:

- generating the required reference voltages and gate control signals. This enables the power main board to carry out voltage regulation (with foldback current limiting) and selection of secondary winding taps.
- supplying the reference current for the fan control circuit on the power main board.

Power Outputs

The power supply provides the following outputs:

- −3.25 V, 3.5 A
- −5.1 V, 1.5 A
- +5.1 V, 2.7 A
- −15 V, 2.2 A
- +15 V, 1.8 A
- −20 V, 1.0 A
- fan(+) & (−)voltages
- HPSV:
  - >4.35 V, 1.16 mA at +5.1 V > 4.85 V
  - <0.40 V, 0.05 mA at +5.1 V < 4.85 V

Power Input

The AC line voltage is applied to the power input module F1 which consists of a:

- line filter for filtering RFI from the AC line voltage
- line fuse F1
- line voltage selector for 100/120/220/240 VAC operation.

The mains on/off switch S1, isolates the input power from the voltage selector. Depending on the voltage selector setting, the primary windings of the transformer are connected in one of the following four modes:

1. **100 V**: the two 120 V windings are connected in parallel, but power is supplied to the 100 V tapping (A) - orange wire.
2. **120 V**: the two 120 V windings are connected in parallel and power is supplied to them (C), (D) - black, black-green wires.
3. **220 V**: the two 120 V windings are connected in series but power is supplied to the 100 V tapping (A) - orange wire.
4. **240 V**: the two 120 V windings are connected in series power is supplied to (C) - black wire.

Caution

It is important to set the voltage selector according to the nominal line voltage supply. This is to prevent:

- malfunction if the supply voltage is too low
- high power losses or blowing of fuse if the supply voltage is too high.

The transformer secondary windings are center tapped, and provide an additional high/low tapping for each of the four output voltage levels. They are all connected to the power main board.

Power Main Board

Regulation circuits are the same for all six output voltages, therefore only a description for the +15 V supply is given here.

+15 V Regulation

There are two complete regulation paths. They are applied together to:

- have a common output at J1(31A,C; 32A,C)
- have a common control by feedback signals generated at R113
- supply the power control board with:
  - a voltage sensing signal +15 V fed to J3(14) - X3(14)
  - a current sensing signal R+15 fed to J3(15) - X3(15)

The high tapping path is formed by:

- the Red 3 and Blue 3 wires of T1, J7(2,4)
- Schottky power diodes, CR101 and CR102, for full wave rectification
- filtering capacitor C101
- series voltage regulation via the power MOSFET Q101

The gate of Q101, is controlled by the voltage drop across R101, which is produced by controlling the current signal G+15H, from the power control board. Q101 is turned off when there is:

- no control current
- control current producing a voltage drop below the gate threshold voltage.

The low tapping path acts in a similar manner with the following components:

- Red 4 and Blue 4 wires of T1, J7(1,3)
- CR103 and CR104
- C102
- Q102
- R102

The unregulated low tapping path voltage UL+15 is fed, via J3(6) and X3(6), to the power control board. The function of this path is to select which tapping path is active (sometimes both). Line voltage tolerance, and to some degree the load state, determine which tapping path is active.

Generally, the high tapping is active at a line voltage that is below the nominal value, but still within tolerance. Low tapping is active when the line voltage is above the nominal value, but still within tolerance. Both are active at around nominal line voltage. This keeps series regulator voltage drop and power losses as low as possible.

Control Power +UB

The high tapping AC voltage (from T1 wires Red 1 and Blue 1) is used by diodes CR123 and CR124 to generate +UB. This unregulated voltage is applied to the power control board via J3(19).

Power-on Reset

This circuit provides correct resetting of the MPU during power on, power off and fail, by:

- monitoring the +5.1 V output with U101
- supplying the HPSV signal to the MPU via J1(3C).

The threshold voltage is approximately +4.85 V at R119. If the +5.1 V supply equals the threshold at power-on, the reset signal is delayed for approximately 40 ms by C120, HPSV then goes high (> 4.35 V). At power-down, the signal change to low is not delayed.

Fan Control

The fan control circuit supplies voltage for the two fans. The value of this voltage is dependent on the temperature detected by the sensor mounted on the motherboard. It is supplied from the unregulated low tapping voltages UL+15 and UL−15 and operates floating to ground.

The temperature sensor, U1, on the motherboard is supplied with a current of approximately 1 mA from R123. It generates a voltage drop directly proportional to the absolute temperature value - 10 mV/K. This voltage is compared with the threshold voltage drop across R125, which is supplied by a reference current of 1 mA from the power control board.

Comparator U103A controls the output voltage of the power regulator U104. The control gain is set by feedback to (R126/R125 + 1). Thus, the threshold point is approximately 300 K (27 °C) and its output voltage approximately 14 V, is determined by the voltage drop of VR103 and R125.

At temperatures below the threshold, the output voltage cannot fall below (approximately) 13.3 V and is determined by the sum of the volt drops of VR103, U103A pins 1-4, CR125 and U104 pins 1 and 2. If the temperature exceeds the limit condition the output of U103A, pin 1 is decoupled by CR125. Uout max is approximately 26.3 V.

Bias and Reference Voltages

The unregulated +UB voltage from J3(19) is stabilized to +UBIAS by VR1, R66, Q15 and C15, this provides the bias for reference voltage generation and some control circuits.

By means of +UBIAS, U7 generates the reference voltage +5R, it is buffered by U8B, Q16 and C17. All other reference voltages are derived from +5R as follows:

1. −5R reference voltage is formed and buffered by U8A, R69, R70 and Q17.
2. Unregulated low tapping voltage UL-15 is stabilized by VR2, R72, and Q20 to the negative bias of U8A.
3. +10R reference voltage is formed by R67, R68 and U8D; it is buffered by C16.
4. The current source IREF is derived from the +10R reference by R71, U8C and Q18. The value of this current source is 1 mA and supplies the fan control circuit on the power main board.

Control Circuits

Most of the control circuits function in a similar way and the +15 V control is used to describe them all. The +5.1 V and −3.25 V control circuits are slightly different; these are described separately after the +15 V control.

+15 V Control

Voltage Control. The voltage sensing feedback signal +15 V from J3(14) and X3(14), is divided and compared to reference voltage −5R by R9, R10 and U1B.

If the voltage output goes high, the output at U1B pin 7 also rises, taking more current via R6 than that injected by R4 to the node of emitters Q1 and Q2. This lower emitter current lowers the gate control current signals, G+15H and G+15L, at the collectors of Q1 and Q2 and thus to the output MOSFETS on the power main board. C2 provides frequency compensation to prevent oscillation.

High/Low Tapping Path Control. Division of these two currents is controlled by the unregulated low tapping voltage UL+15 and the differential stage function of Q1, Q2, R1, R2, R3 and R5.

If the line voltage is operating at low tolerance, Q2 conducts and only the high tapping path is activated and controlled, the low tapping path being switched off. Around nominal line voltage both high and low tapping paths are activated because of the linear region operation of Q1 and Q2. This action is smoothed by C1 to damp ripple voltages. At high line voltage tolerance only Q1 is on and thus only the low tapping path is activated.

Foldback Current Limitation. Feedback signals R+15 and +15V represent the voltage drop of the output current sensing resistor. It is compared by U1A, to the limit threshold set by R7 and R8, and the output pin 1 of U1A. It achieves control in a similar manner to voltage regulation, but limits the output current when active. Diodes CR1 and CR2 decouple operation during the most positive control voltage, therefore the limiting function is active.

When below the current limit, the voltage of U1A pin 1 is close to −5R, therefore CR2 is reversed biased and has no influence on voltage control. The foldback characteristic is achieved by lowering the threshold. As the output voltage decreases, so does the R+15 voltage

in current limiting operation. At the output, the short circuit minimum foldback current limit is reached and R+15 is almost zero.

+5.1V Control

The output voltage of the operational amplifier U2 is buffered by Q6 and R19. The gate signals G+5H and G+5L are controlled by voltage rather than current, via R17 and R18. Therefore at differential stage Q4/Q5 the transistor which is not conducting, is that corresponding to the active tapping path; at the same time the conducting transistor switches the other tapping path off.

CR7 and CR8 lower the maximum output voltage, to prevent saturation of U2 at the highest gate voltage and conduction points. R73 prevents gate oscillation.

−3.25V Control

There is a separate voltage sensing signal, −3.25VSENS, from the motherboard, that compensates for voltage drops of up to 0.1 V. R34 in conjunction with the −3.25V signal prevents the output voltage rising more than approximately 0.1 V if the −3.25VSENS line is open circuit.

This page intentionally blank

BLOCK DIAGRAM POWER SUPPLY

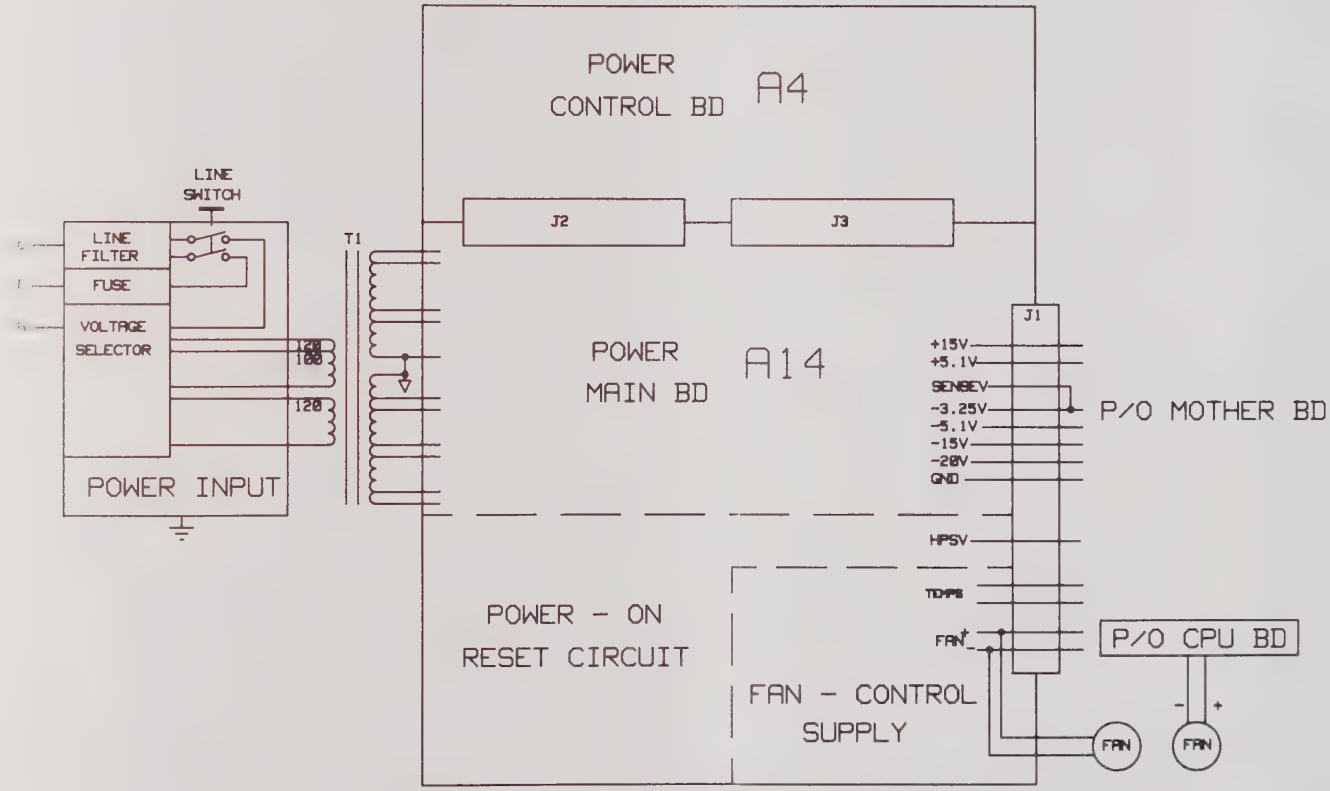

MODEL HP8131A FIGURE 6.2-2.
POWER SUPPLY BLOCK DIAGRAM

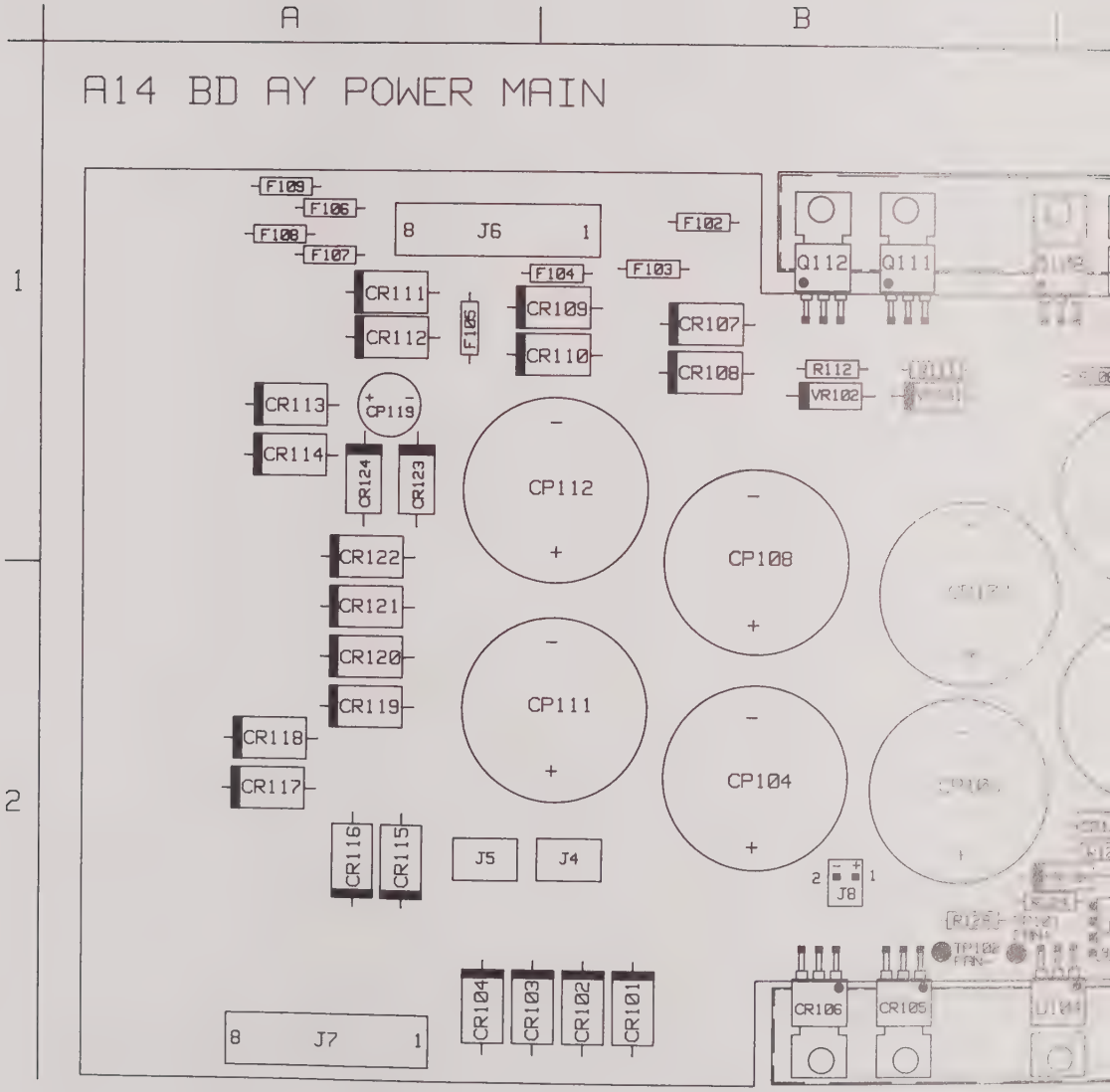
A
B
1
2
A14 BD AY POWER MAIN
F109
F106
F108
F107
8 J6 1
F102
F104
F103
CR111
CR112
F105
CR109
CR110
CR107
CR108
Q112
Q111
R112
VR102
CR113
CP119
CR114
CR124
CR123
CP112
CP108
CR122
CR121
CR120
CR119
CP111
CP104
CR118
CR117
CR116
CR115
J5
J4
2 J8 1
8 J7 1
CR104
CR103
CR102
CR101
CR106
CR105

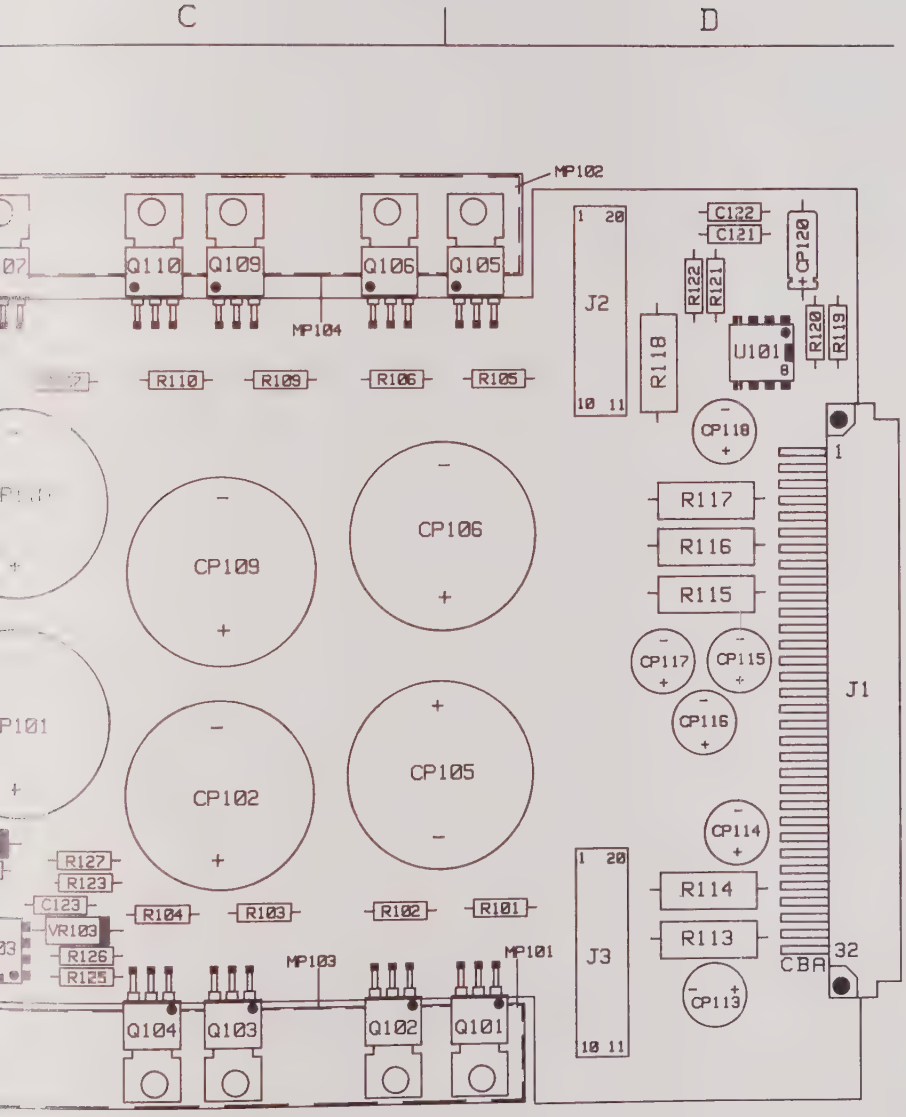

REF. DES.	GRID LOC.	REF. DES.	GRID LOC.	REF. DES.	GRID LOC.
CP101	C2	CR123	A1	R110	C1
CP102	C2	CR124	A1	R111	B1
CP103	B2	CR125	C2	R112	B1
CP104	B2			R113	D2
CP105	D2	F102	B1	R114	D2
		F103	B1		
CP106	D1	F104	B1	R115	D2
CP107	B2	F105	A1	R116	D1
CP108	B2	F106	A1	R117	D1
CP109	C1			R118	D1
CP110	C1	F107	A1	R119	D1
		F108	A1		
CP111	B2	F109	A1	R120	D1
CP112	B1			R121	D1
CP113	D2	J1	D1/2	R122	D1
CP114	D2	J2	D1	R123	C2
CP115	D2	J3	D2	R124	C2
		J4	B2		
CP116	D2	J5	A2	R125	C2
CP117	D2			R126	C2
CP118	D1	J6	B1	R127	C2
CP119	A1	J7	A2	R128	C2
CP120	D1	J8	B2	R129	B2
C121	D1	MP101	D2	TP101	B2
C122	D1	MP102	D1	TP102	B2
C123	C2	MP103	C2		
		MP104	C1	U101	D1
CR101	B2			U103	C2
CR102	B2	Q101	D2	U104	C2
CR103	B2	Q102	D2		
CR104	B2	Q103	C2	VR101	B1
CR105	B2	Q104	C2	VR102	B1
		Q105	D1	VR103	C2
CR106	B2			VR104	C2
CR107	B1	Q106	D1		
CR108	B1	Q107	C1		
CR109	B1	Q108	C1		
CR110	B1	Q109	C1		
		Q110	C1		
CR111	A1				
CR112	A1	Q111	B1		
CR113	A1	Q112	B1		
CR114	A1				
CR115	A2	R101	D2		
		R102	D2		
CR116	A2	R103	C2		
CR117	A2	R104	C2		
CR118	A2	R105	D1		
CR119	A2				
CR120	A2	R106	D1		
		R107	C1		
CR121	A2	R108	C1		
CR122	A2	R109	C1		

MODEL HP8131A FIGURE 6.2-3.
MAIN BOARD COMPONENT LAYOUT
POWER SUPPLY (A14)

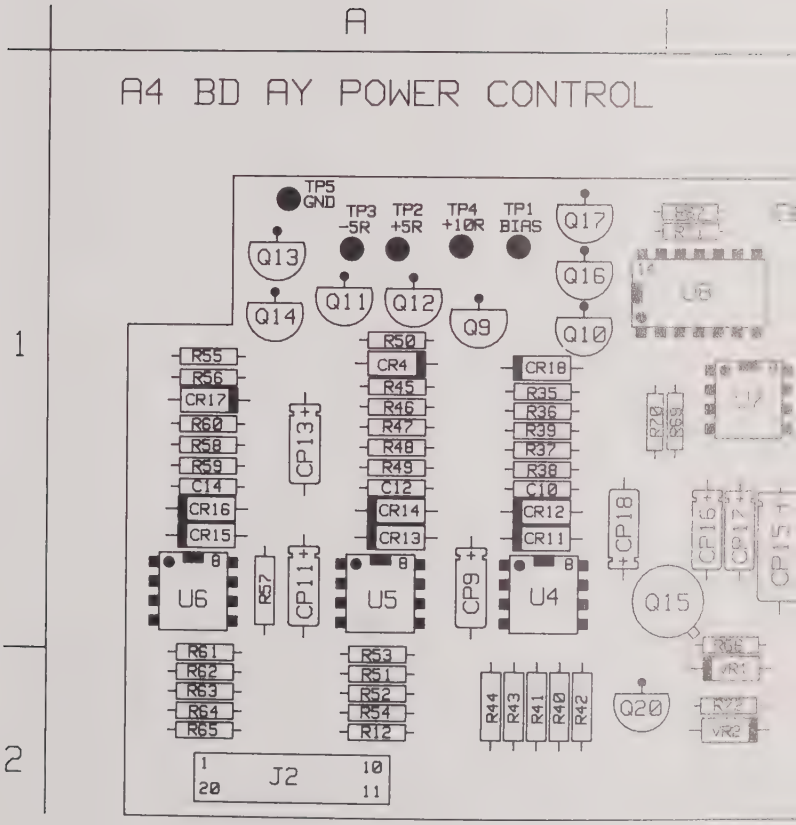
A
A4 BD AY POWER CONTROL
1
2
TP5 GND
TP3 -5R
TP2 +5R
TP4 +10R
TP1 BIAS
Q13
Q14
Q11
Q12
Q9
Q17
Q16
Q10
R55
R56
CR17
R60
R58
R59
C14
CR16
CR15
CP13
R50
CR4
R45
R46
R47
R48
R49
C12
CR14
CR13
CR18
R35
R36
R39
R37
R38
C10
CR12
CR11
CP18
CP16
CP17
CP15
U6
R57
CP11
U5
CP9
U4
Q15
R61
R62
R63
R64
R65
R53
R51
R52
R54
R12
R44
R43
R41
R40
R42
Q20
J2
1
20
10
11

B

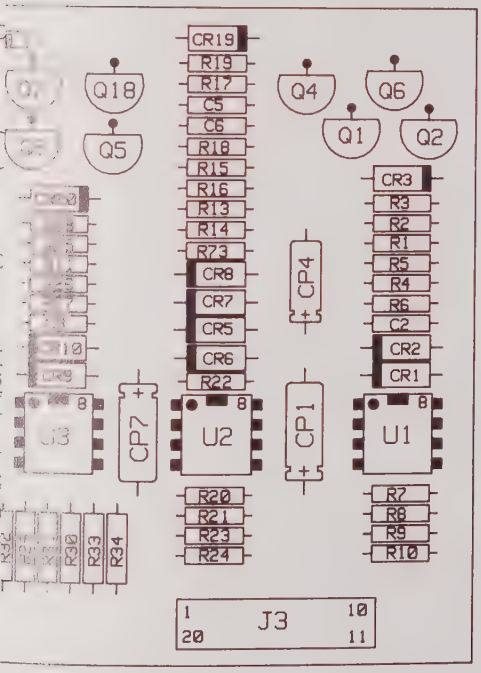

REF. DES.	GRID LOC.	REF. DES.	GRID LOC.	REF. DES.	GRID LOC.	REF. DES.	GRID LOC.	REF. DES.	GRID LOC.
CP1	B1	CR13	A1	R1	B1	R31	B2	R61	A2
C2	B1	CR14	A1	R2	B1	R32	B2	R62	A2
CP4	B1	CR15	A1	R3	B1	R33	B2	R63	A2
C5	B1	CR16	A1	R4	B1	R34	B2	R64	A2
C6	B1	CR17	A1	R5	B1	R35	A1	R65	A2
CP7	B1	CR18	A1	R6	B1	R36	A1	R66	B1
C8	B1	CR19	B1	R7	B2	R37	A1	R67	B1
CP9	A1	CR20	B1	R8	B2	R38	A1	R68	B1
C10	A1			R9	B2	R39	A1	R69	B1
CP11	A1	J2	A2	R10	B2	R40	A2	R70	A1
		J3	B2						
CP13	A1			R11	B1	R41	A2	R71	B1
C13	A1	Q1	B1	R12	A2	R42	A2	R72	B2
C14	A1	Q2	B1	R13	B1	R43	A2	R73	B1
CP15	B1	Q4	B1	R14	B1	R44	A2		
CP16	B1	Q5	B1	R15	B1	R45	A1	TP1	A1
		Q6	B1					TP2	A1
CP17	B1			R16	B1	R46	A1	TP3	A1
CP18	A1	Q7	B1	R17	B1	R47	A1	TP4	A1
		Q8	B1	R18	B1	R48	A1	TP5	A1
CR1	B1	Q9	A1	R19	B1	R49	A1		
CR2	B1	Q10	A1	R20	B2	R50	A1	U1	B1
CR3	B1	Q11	A1					U2	B1
CR4	A1			R21	B2	R51	A2	U3	B1
CR5	B1	Q12	A1	R22	B1	R52	A2	U4	A1
		Q13	A1	R23	B2	R53	A2	U5	A1
CR6	B1	Q14	A1	R24	B2	R54	A2		
CR7	B1	Q15	A/B1	R25	B1	R55	A1	U6	A1
CR8	B1	Q16	A1					U7	B1
CR9	B1			R26	B1	R56	A1	U8	A/B1
CR10	B1	Q17	A1	R27	B1	R57	A1		
		Q18	B1	R28	B1	R58	A1	VR1	B2
CR11	A1	Q20	A1	R29	B2	R59	A1	VR2	B2
CR12	A1			R30	B2	R60	A1		

MODEL HP8131A FIGURE 6.2-4.
CONTROL BOARD COMPONENT LAYOUT

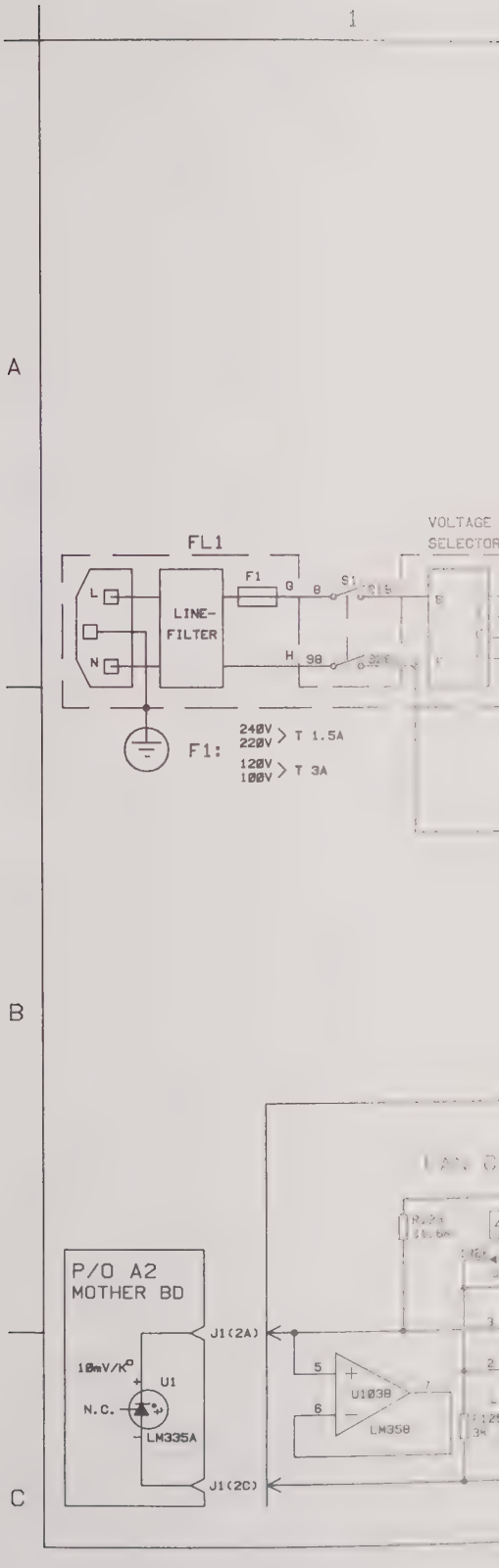
1
A
B
C
FL1
L
N
LINE-
FILTER
F1
S1
H
240V
220V
T 1.5A
F1:
120V
100V
T 3A
VOLTAGE
SELECTOR
P/O A2
MOTHER BD
J1(2A)
J1(2C)
10mV/K°
U1
N.C.
LM335A
U103B
LM358

P/O A14 POWER MAIN BOARD

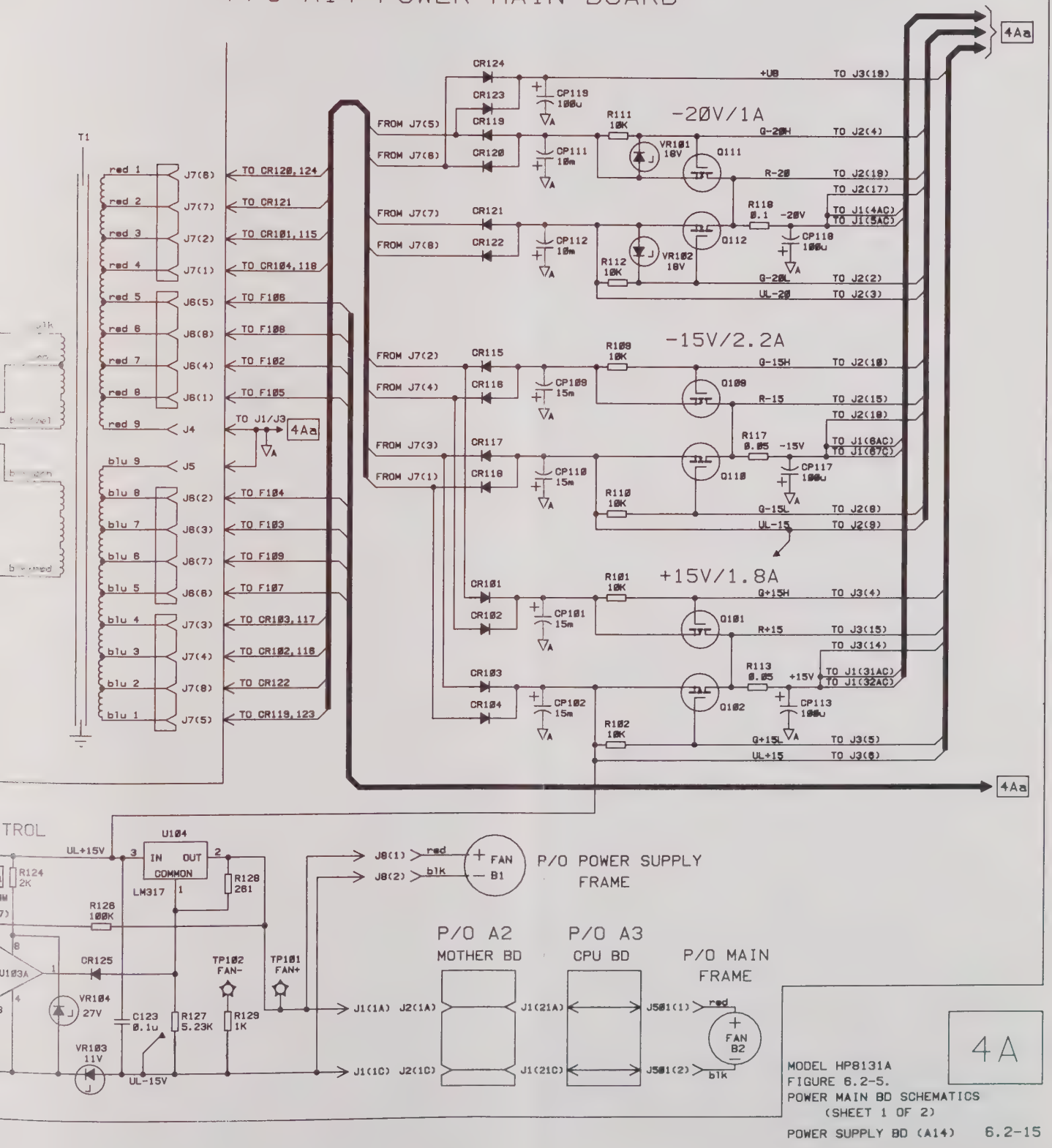

4A

MODEL HP8131A
FIGURE 6.2-5.
POWER MAIN BD SCHEMATICS
(SHEET 1 OF 2)

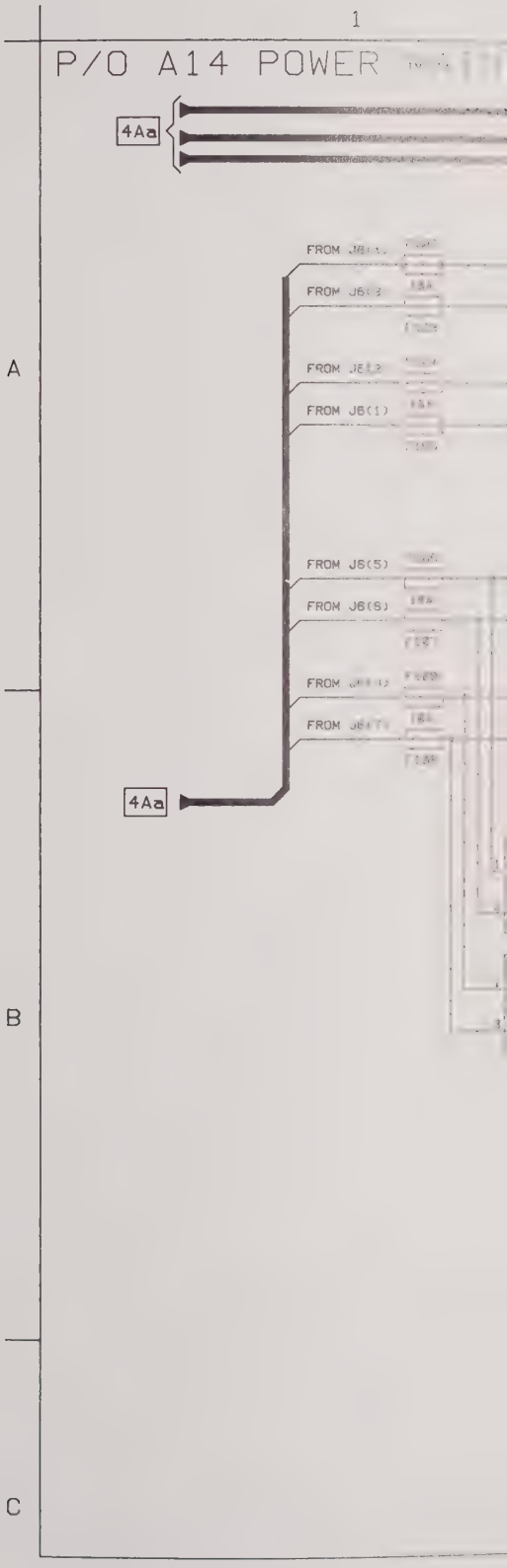
1
P/O A14 POWER
4Aa
FROM J6(3)
FROM J6(2)
FROM J6(1)
FROM J6(5)
FROM J6(6)
4Aa
A
B
C

BOARD

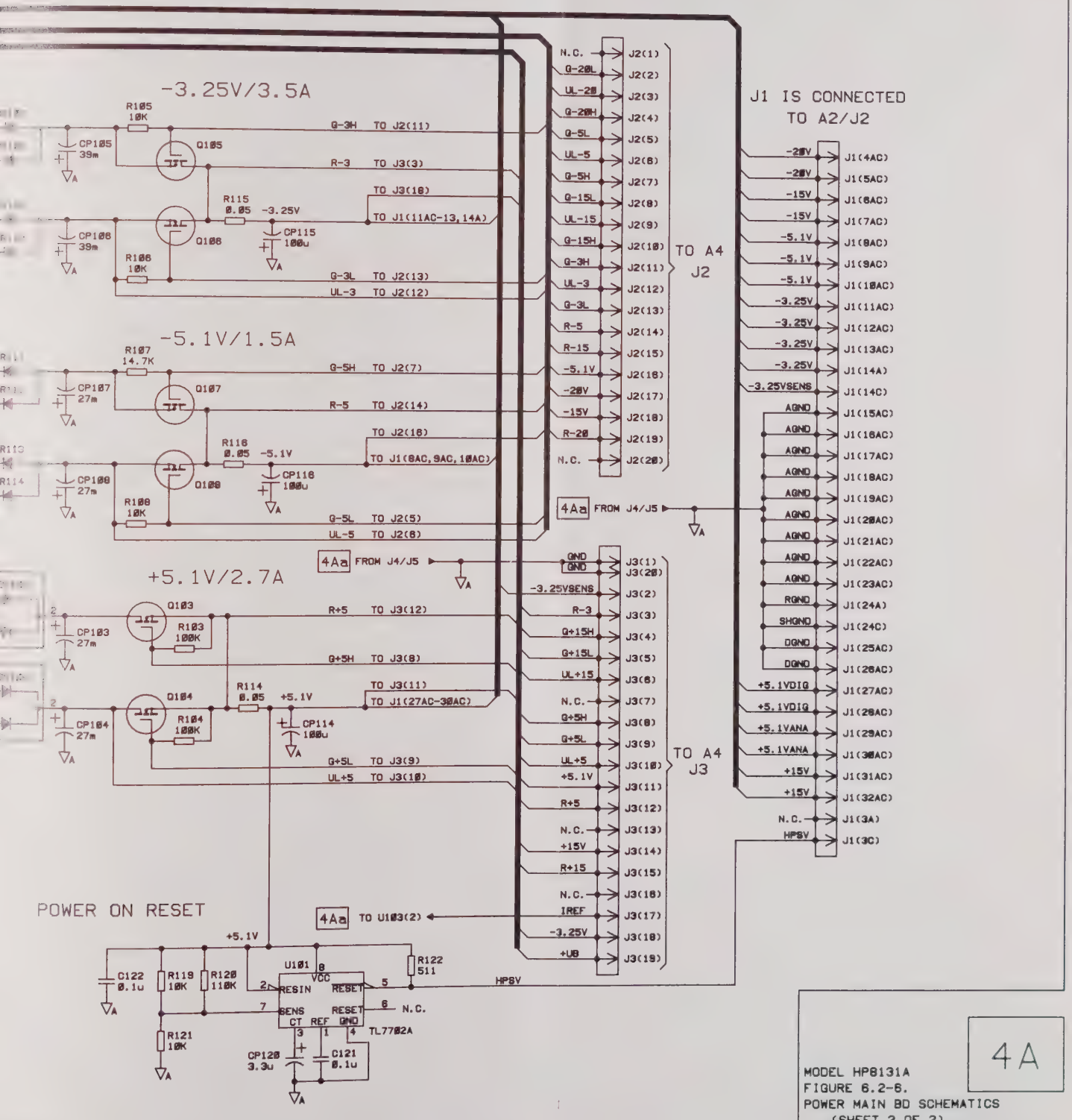

4A

MODEL HP8131A
FIGURE 6.2-6.
POWER MAIN BD SCHEMATICS
(SHEET 2 OF 2)

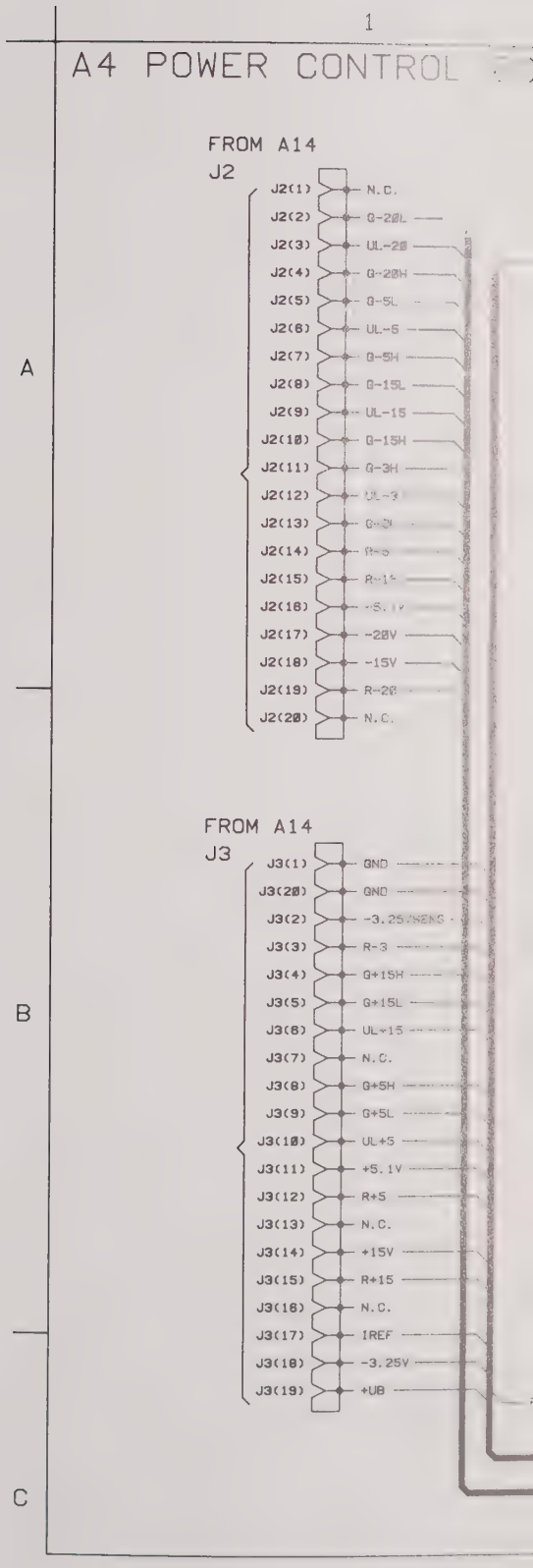
1
A4 POWER CONTROL
FROM A14
J2
J2(1) N.C.
J2(2) G-20L
J2(3) UL-20
J2(4) G-20H
J2(5) G-5L
J2(6) UL-5
J2(7) G-5H
J2(8) G-15L
J2(9) UL-15
J2(10) G-15H
J2(11) G-3H
J2(12)
J2(13)
J2(14)
J2(15)
J2(16)
J2(17) -20V
J2(18) -15V
J2(19)
J2(20) N.C.
FROM A14
J3
J3(1) GND
J3(20) GND
J3(2)
J3(3) R-3
J3(4) G+15H
J3(5) G+15L
J3(6) UL+15
J3(7) N.C.
J3(8) G+5H
J3(9) G+5L
J3(10) UL+5
J3(11) +5.1V
J3(12) R+5
J3(13) N.C.
J3(14) +15V
J3(15) R+15
J3(16) N.C.
J3(17) IREF
J3(18) -3.25V
J3(19) +UB
A
B
C

REFERENCE VOLTAGES

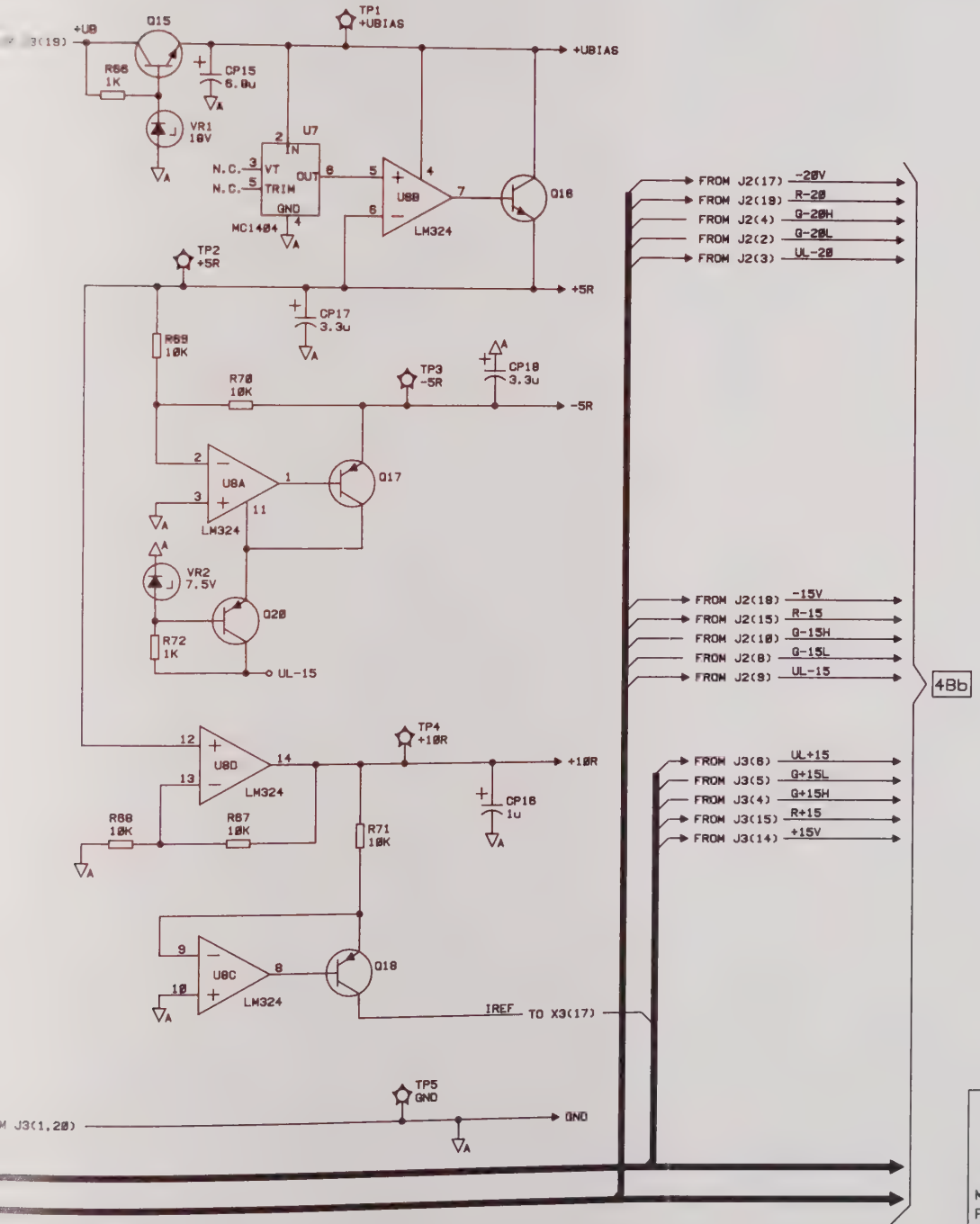

4B

MODEL HP8131A
FIGURE 6.2-7.
POWER MAIN BD SCHEMATICS
(SHEET 1 OF 2)

A4 POWER CONTROL BOARD

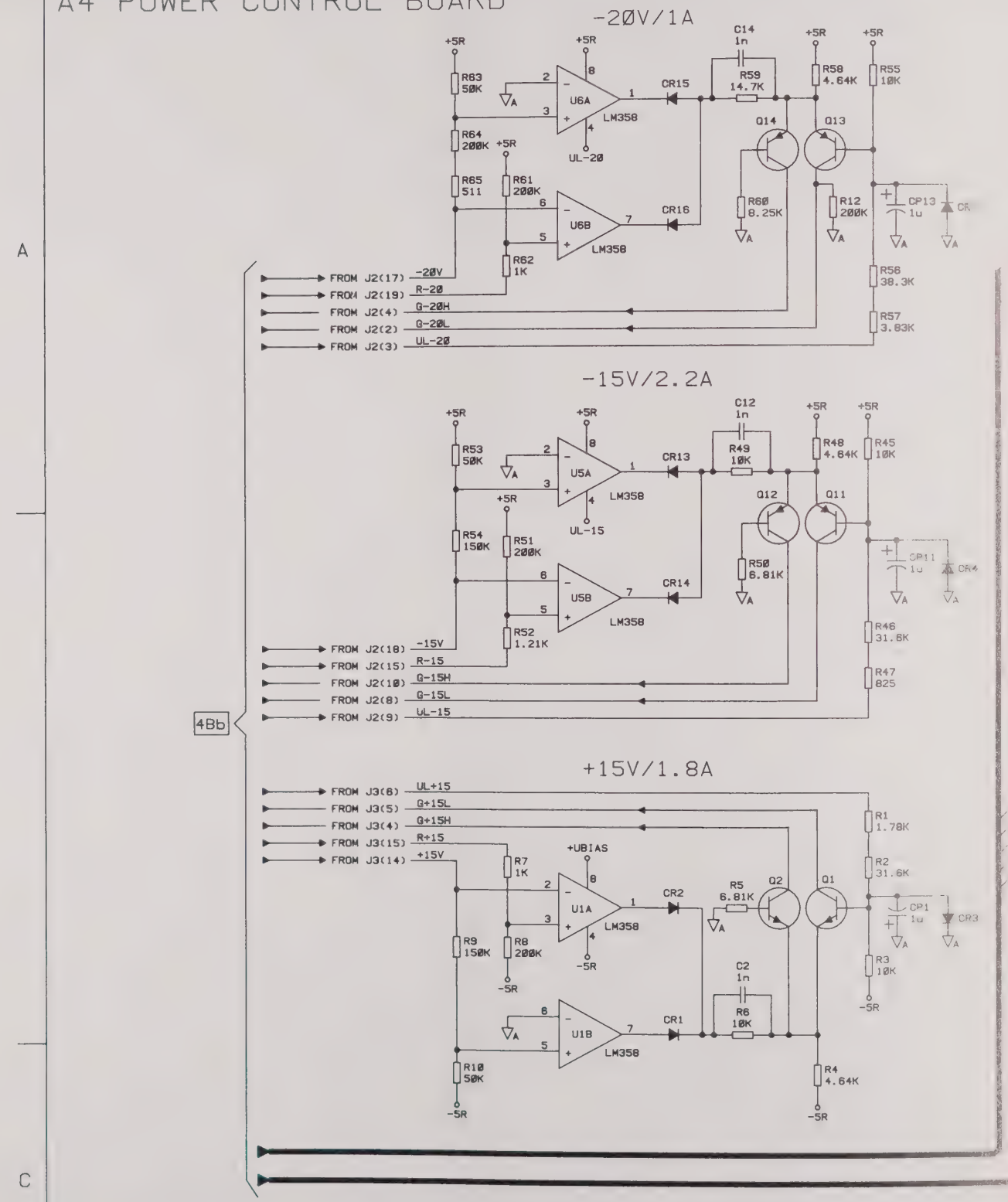

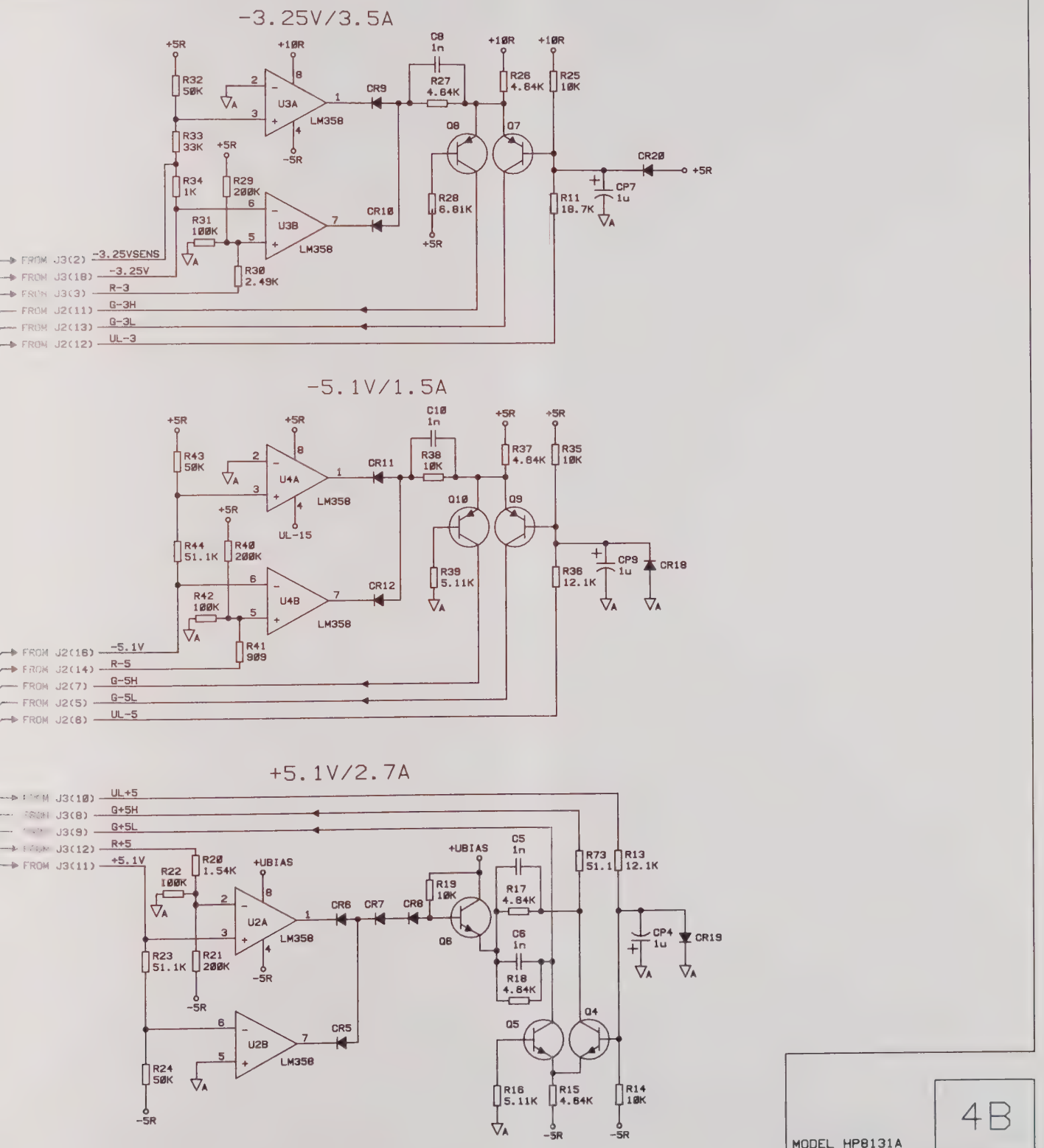

4B

MODEL HP8131A
FIGURE 6.2-8.
POWER MAIN BD SCHEMATICS
(SHEET 2 OF 2)

6-3

CPU Board (A3)

Introduction

The CPU board houses a MC 68B09E microprocessor, with associated circuits and components. The following section provides basic block level theory of operation. A more detailed theory of operation follows this section.

Block Theory of Operation

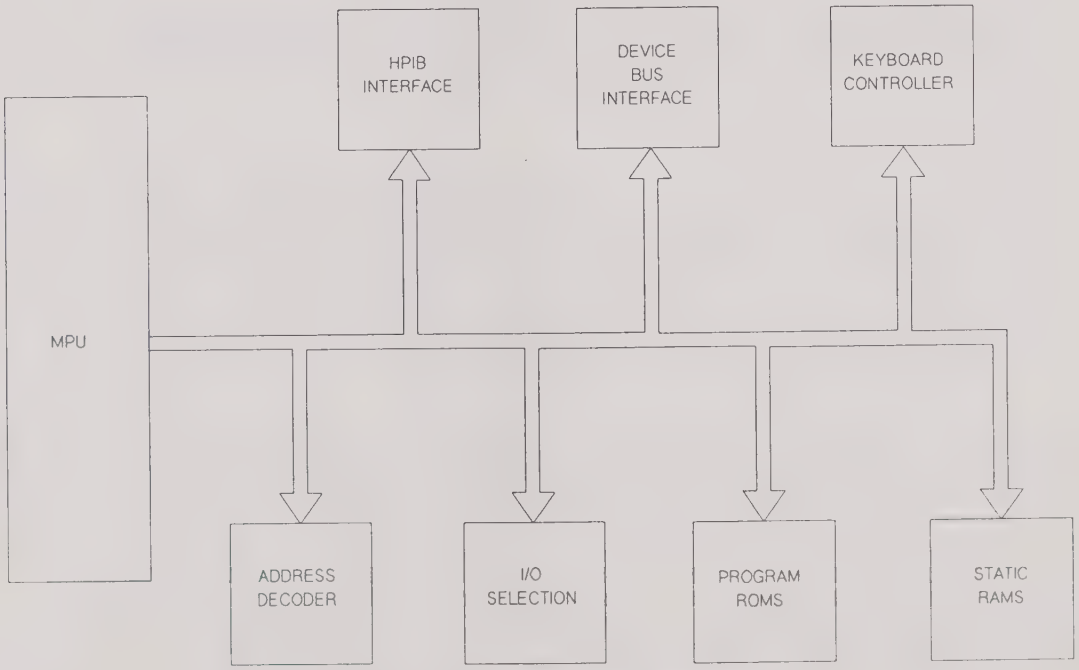

Figure 6-3-1. Module Block Diagram

Microprocessor (MPU)

The CPU board microprocessor is an MC 68B09E using an 8-bit bidirectional (buffered) data bus, a 16-bit unidirectional address bus and an interrupt line.

Address Decoder

This circuit generates the select lines.

I/O Selection

This circuit is used to address the I/O devices, RAM, and ROM on the CPU board.

Program ROMs

The two ROMs (32 Kword x 8 bit) used on this board contain instructions that are read by the MPU.

Static RAMs

The static RAMs (8K x 8-bit) provide information storage concerning the state of the instrument, plus other data. To ensure security of data when power is switched off, the two chips are buffered by a battery backup. This battery is activated each time the power is switched off.

Keyboard Controller

This block is responsible for scanning the keyboard and LEDs. The controller scans each row and column of the keyboard for a closed switch. When a change in the switch matrix is detected, the processor is sent an interrupt request.

The LEDs are scanned out of the internal RAM of the keyboard controller. These LEDs are used to indicate the active state of a parameter or a function.

Device Bus Interface

The CPU board communicates with, or controls the other boards within the HP 8130A/HP 8131A via the device bus. This bus consists of:

- 8-bit bidirectional device data bus
- 6-bit high device address bus
- 4 low card select lines
- 2 control lines.

HP-IB Interface

Communications between separate systems is achieved over a communications link known as the Hewlett-Packard Interface Bus (HP-IB). The HP-IB conforms to the IEEE 488 (1987) standard. The HP-IB connector on the rear panel of the HP 8130A/HP 8131A is connected to the CPU board by means of a ribbon cable.

Control Timing

This circuit provides the CPU board with its timing waveforms. Each waveform has a frequency of 1.25 MHz and a delay between each adjacent phase of 50 ns. For example, P1 leads P2 by 50 ns.

Reset Logic

About 50 ms after the +5 V supply exceeds +4.8 V the HPSV signal will become active indicating a stable supply i.e. a LOW level on this line indicates the reset mode. When the HPSV signal is valid a green LED, on the CPU board, will light up.

Microprocessor Unit (MPU)

The MC 68B09E microprocessor (MPU) uses an 8-bit bi-directional buffered data bus (HDBRW0 - HDBRW7), to communicate with other boards. The MPU is capable of addressing 64 Kbyte of memory. Clocking for the MPU E and Q clock inputs is provided by the Control Timing Section.

I/O Decoding and RAM/ROM Selection

This circuit generates the select lines used to address the I/O devices, RAM, and ROM, on the CPU board. 1024 bytes are reserved for the Device Bus used for communication between the CPU board and other boards within the HP 8130A/HP 8131A.

I/O Decoding

To select/enable an I/O operation and/or device, the I/O STROBE lines (LIS0 - LIS07) are used. These signals are generated by an addressable demultiplexer.

Table 6-3-1. I/O Functions Selection

Strobe Mnemonics	I/O Function	Physical Address (hex)
LIS7	reset timer	000E0 - 000FF
LIS6	write interrupt mask	000C0 - 000DF
LIS5	read interrupt status	000A0 - 000BF
LIS4	write control latch	00080 - 0009F
LIS3	write keyboard controller	00060 - 0007F
LIS2	read keyboard controller	00040 - 0005F
LIS1	HP-IB controller	00020 - 0003F
LIS0	NOT USED	00000 - 0001F

RAM/ROM Selection

The chip select signals needed to select RAM, ROM etc are generated by 1 from 8 multiplexers, decoding the MPU address lines. To avoid glitches on the select lines, the multiplexers are enabled by gating two timing signals (P2 and P6).

Table 6-3-2. RAM/ROM Selection

Strobe Mnemonic	Function	Physical Address (hex)
LS6	ROM selection	08000 - 0FFFF
LS5	ROM selection	04000 - 07FFF
LS4	SRAM selection	02000 - 03FFF
LS3	SRAM selection	01000 - 01FFF
LS2	EEPROM selection	00800 - 00FFF
LS1	device bus selection	00400 - 007FF
LS0	I/O selection	00000 - 003FF

Control Latch

The MPU uses this latch to control and/or enable various functions on the CPU board. The MPU outputs control information onto the bidirectional data bus (HDBRW0 - HDBRW7) via the data bus buffer (U406). The information is then clocked into the control latch (U404) by the I/O select line, LIS4. The resultant 8 outputs are used to control various system functions as listed in the following table.

Table 6-3-3. Control Latch Bit Assignment

Control Bit	Position on Data Bus	Function
CL(7 - 4)	HDBRW(7 - 4)	used to stretch the device bus cycle in order to serve slow devices
CL3	HDBRW3	NOT USED
CL2	HDBRW2	used to expand the 4K addressable SRAM space
CL(1 - 0)	HDBRW(1 - 0)	used to expand the 16K addressable ROM space

Interrupt Processing

This circuit is responsible for sampling and masking all interrupts.

The MPU:

- sets the priority for each interrupt
- masks out lower priority interrupts
- services the interrupt with highest priority

Four different interrupts can be generated in the HP 8130A/HP 8131A as indicated by the table below.

Table 6-3-4. Interrupts

Mnemonic	Interrupt	Function
HDBI	High Device Bus Interrupt	This is an interrupt signal derived from the common Low Device Bus Request (LDRQ) line used by the other boards to indicate a request to the MPU.
HKBI	High KeyBoard Interrupt	This signal indicates a change in the keyboard matrix
HTI	High Timer Interrupt	This is an interrupt signal from a timer used by a real-time Operating System
HIBI	High HP-IB	This is an interrupt request from the HP-IB controller

HP-IB - Interface

The Hewlett Packard Interface Bus (HP-IB) is an implementation of the IEEE Std. 488.2. It is a bit-parallel/byte-serial asynchronous interface using a three wire handshake.

- The handshake signals are DAV, NRFD and NDAC
- The management signals are IFC, ATN, SRQ, REN and EOI

The interface function for each system component is performed within each component, thus, only passive cabling is needed to connect up the system. The cables connect all instruments, controllers and other components in parallel.

Data and commands are transferred between system components via 16 signal lines (HPA00 - HPA15).

The HP-IB controller carries out communication by means of 13 registers. Six of these registers are read from, and seven written to. The registers are used to send control data to, and receive status information from, system components. A LOW on the chip enable indicates that the processor is carrying out either a read or write from the selected register.

Keyboard Controller

The keyboard controller is used to scan:

- The keyboard
- The LEDs on the front panel, used to indicate the active state of a parameter or function. Each of these functions is programmed and controlled by the CPU.

The controller is always enabled.

Data flow between the MPU and the Keyboard controller registers and buffers, is controlled by two I/O select lines, LSI2 and LSI3, in conjunction with the address line HPA0 (see table below).

Table 6-3-5. Keyboard Controller Select Lines

LIS2	LIS3	HPA0	Function
0	1	0	Write command to keyboard controller
0	1	1	Write data to keyboard controller
1	0	0	Read status of keyboard controller
1	0	1	Read data from keyboard controller

Scanning the Keyboard

The keyboard controller uses the sensor matrix mode to scan the keyboard. Each switch corresponds to a specific location in an 8-bit by 8-bit sensor RAM. This sensor RAM keeps an image of the state of the sensor matrix switches.

Scanning the rows of the sensor matrix or keyboard is accomplished by a combination of the encoded scan lines SL2 -SL0. These lines count from zero to seven in binary thus enabling 1 of 8 outputs of a demultiplexer.

The eight outputs of the demultiplexer are connected to the row lines of the keyboard switches. Thus each byte, in the sensor matrix RAM corresponds to a row of switches.

The state of the eight columns in the sensor matrix is sampled via the eight keyboard-column lines. The result is loaded into the respective bit location of the byte addressed in the sensor RAM by the active row.

A closed switch is indicated by a LOW sensed on a column line. The interrupt request line (HKBI) goes HIGH if a key-location has a changed value. The processor services the interrupt and HKBI goes LOW.

Scanning the Front Panel LEDs

The keyboard controller has a 16-word by 8-bit internal display RAM (only 12 bytes are used) used to drive the front panel LEDs.

The keyboard controller BD output signal inhibits all LEDs while information on the data outputs is changing.

The contents of the display RAM are arranged in such a way that each RAM bit corresponds to one LED on the front panel. When a bit is set the corresponding LED lights up.

Device Bus Interface

The MPU communicates with, or controls, the other boards in the HP 8130A/HP 8131A via the Device Bus. This bus consists of address, data and control lines, that only change their state when data is exchanged.

The 8-bit bidirectional Device Data Bus is derived from HDBRW0 - HDBRW7, the processor data bus.

High Read (HR) active enables the buffer to read data to the MPU. High Write (HW) (the complement of HR) active enables data to be latched into the buffer and to be then sent to other boards. This two-way data transfer is carried out via HDRW0 - HDRW7.

The Device Bus Interface occupies 1 Kbyte of memory. This memory space is divided into 16 parts consisting of 64 locations addressed by address lines HPA5 - HPA0. To address one of these 16 parts, 4 address lines are decoded into eight select lines; each line can select one slot.

Table 6-3-6. Device Bus Address Lines

Mnemonic	Physical Address	Slot on Mother board
LCS0	0600 - 063F	slot 0 - timing board
LCS1	0640 - 067F	slot 1 - output board 1
LCS2	0680 - 06BF	slot 2 - optional output board 2
LCS3	06C0 - 06FF	slot 3 - service connector
LCS4-7	NOT USED	

Three control lines handle the Device Bus transaction as indicated by the table below.

Table 6-3-7. Device Bus Control Lines

Mnemonic	Function
LRHW	Low Read/High Write used to control the direction of data flow
LDBV	Low Device Bus Valid, this signal is used to synchronize the address and data exchange on the Device Bus
LDRQ	Low Device bus ReQuest, used to indicate an interrupt from a board within the HP 8130A/HP 8131A

Battery Back-up

Normal Operating Mode

VBAT is driven near to +5 V via a transistor on the CPU board. The battery is disconnected from VBAT and the SRAMs are supplied from the power supply; HPSV is active high.

Battery Back-up Mode

When the +5 V drops below 4.75 V HPSV goes LOW and the transistor that drives VBAT turns off. This results in the voltage level on VBSAT falling towards the battery level. Once the battery level is reached, it is made available to the SRAMs. The potential on the active LOW CS inputs of the SRAMs are pulled to the battery voltage and thus access is denied. The SRAMs are now buffered.

The SRAMs are driven by a Lithium battery.

Signal Mnemonics and their Functions

Table 6-3-8. Signal Mnemonics and their Functions

Mnemonic	Function
ATN	ATTention. HP-IB line that defines the type of data on the interface data bus (address/commands or data). See the HP-IB Interface section
BA00 - BA15	MPU Bus Address lines 0-16. MPU address bus
CL0 - CL7	Control Lines 0-7. Used by the MPU to control various system functions. See Control Latch section.
DAV	DAta Valid. HP-IB line that indicates availability and validity of the data on the interface bus. See HP-IB section.
DB0 - DB7	Device Bus lines 0-7. Bidirectional data bus used for communication between the MPU and the other boards.
EMAP0, EMAP1	EPROM MAP lines. Used to map a 32 Kbyte SRAM into two 16 Kbyte EPROM pages.
EOI	End Of Identity. HP-IB line; indicates end of data transfer on the interface bus. See HP-IB Interface section.
HIBI	High Interface Bus Interrupt. Used to inform the processor of a request from the HP-IB interface (if the signal can pass the interrupt mask).
HDA0 - HDA5	High Device bus Address lines 0-5. Static address bus used to select 1 of 64 locations on the board. Enabled by the active LCS line during a device bus operation.
HDB	High Device Bus. Derived from address information to indicate an MPU operation on the device bus.
HDBA	High Device Bus Address. Used to latch address information when the MPU is communicating via the device bus.
HDBI	High Device Bus Interrupt. Used to inform the processor of a request from another board (if the signal can pass the interrupt mask).
HKBI	High KeyBoard Interrupt. Used to inform the processor of a request from the keyboard controller (if it can pass the interrupt mask).
HMR	High Master Reset. This signal will stay at the active LOW level for about 50 ms after power-on (see LMR).
HPSV	High Power Supply Valid. About 50 ms after the +5 V supply exceeds approximately +4.8 V, this signal will become active indicating a stable power supply.
HR	High Read. Indicates a data read operation. Used for devices on the CPU board.
HTI	High Timer Interrupt. This signal is used by the operating system to inform the MPU of a request.
HW	High Write. Indicates a data write operation. Used for devices on the CPU board.
HWDD	High Write Device bus Data. Used by the MPU to clock data into the device bus latch for a write operation.

Table 6-3-8. Signal Mnemonics and their Functions (continued)

Mnemonic	Function
IFC	InterFace Clear. HP-IB line; places I/O system into a known state.
LCEN	Low Card ENable. The LCEN input of each slot of the HP 8131A is connected to a different LCS line. This line indicates an access to the related board (slot) by the MPU.
LCS0 - LCS7	Low Card Select 0-7. Indicates which slot on the HP 8130A/HP 8131A has been addressed for a data exchange with the MPU.
LDBV	Low Device Bus Valid. This line is used by the MPU to indicate stable information (data, address) on the device bus. It is used for communication between the MPU and other boards
LDRQ	Low Device bus ReQuest. This line is used by boards to inform the MPU of a request.
LIS0 - LIS7	Low I/O Strobe lines 0-7. Signals from the I/O decoder used for read/write or enable operations on the MPU I/O devices.
LMR	Low Master Reset. This signal stays at the active LOW level for about 50 ms after power-on.
LRHW	Low Read/High Write. Used to indicate the direction of the device bus data flow.
LOE	Low Output Enable. Used to control the output of the EPROMs.
LROM0, LROM1	Low ROM select. Used to select ROM0 or ROM1 on the MPU board
LSRAM0, LSRAM1	Low SRAM select. Used to select SRAM0 or SRAM1 on the MPU board
LEEPROM	Low EEPROM select. Used to select the EEPROM on the MPU board.
LWE	Low Write Enable. Used to enable the RAMs.
NDAC	Not Data ACcepted. HP-IB handshake line indicating acceptance of data by all devices.
NFRD	Not Ready For Data. HP-IB handshake line indicating that devices are ready to accept data.
P0 -P7	Phase 0-7. Each phase is a 1.25 MHz signal from the control timing circuit.
RL0 - RL7	Return Lines 0-7. Return line inputs that are connected to the scan lines via the keys (input lines to key_ctrl).
S0 -S7	Segment lines. These lines form the output of the display refresh registers. The data from these outputs is synchronized with the scan lines (SL0 - SL3).
SL0 - SL3	Scan Lines. These scan lines are used to scan the key switches or the display digits.
SMAP	SRAM MAP line. Used to map an 8 Kbyte SRAM in two 4 Kbyte SRAM pages.

Motherboard Connector

Table 6-3-9. Motherboard Connector Pin Definitions

Pin	Row a	Row c	Pin	Row a	Row c
32	S1	S0	16	+5.1 V	+5.1 V
31	S3	S2	15	+5.1 V	+5.1 V
30	S5	S4	14	+5.1 V	+5.1 V
29	S7	S6	13	+5.1 V	+5.1 V
28	RL1	RL0	12	SHGND	SHGND
27	RL3	RL2	11	LCS2	LCS3
26	RL5	RL4	10	LCS0	LCS1
25	RL7	RL6	09	LDRQ	HPSV
24	SL1	SL0	08	HDD6	HDD7
23	SL3	SL2	07	HDD4	HDD5
22	nc	nc	06	HDD2	HDD3
21	FAN+	FAN-	05	HDD0	HDD1
20	DGND	DGND	04	LRHW	LDBV
19	DGND	DGND	03	HDA4	HDA5
18	DGND	DGND	02	HDA2	HDA3
17	DGND	DGND	01	HDA0	HDA1

Keyboard to CPU Board Connections

Table 6-3-10. Keyboard and CPU Pin Definitions

Signal	Keyboard Connector Pins	CPU Connector Pins
S0	1	32c
S1	2	32a
S2	3	31c
S3	4	31a
S4	5	30c
S4	6	30a
S6	7	29c
S7	8	29a
RL0	9	28c
RL1	10	28a
RL2	11	27c
RL3	12	27a
RL4	13	26c
RL5	14	26a
RL6	15	25c
RL7	16	25a
SL0	17	24c
SL1	18	24a
SL2	19	23c
SL3	20	23a

HP-IB to CPU Board Connections

Table 6-3-11. HP-IB and CPU Pin Definitions

Signal	HP-IB Connector Pins	CPU Connector Pins
DIO1	1	1
DIO2	2	3
DIO3	3	5
DIO4	4	7
EOI	5	9
DAV	6	11
NRFD	7	13
NDAC	8	15
IFC	9	17
SRQ	10	19
ATN	11	21
SHIELD	12	23
DIO5	13	2
DIO6	14	4
DIO7	15	6
DIO8	16	8
REN	17	10
GND	18	12
GND	19	14
GND	20	16
GND	21	18
GND	22	20
GND	23	22
GND	24	24

BLOCK DIAGRAM CPU BOARD

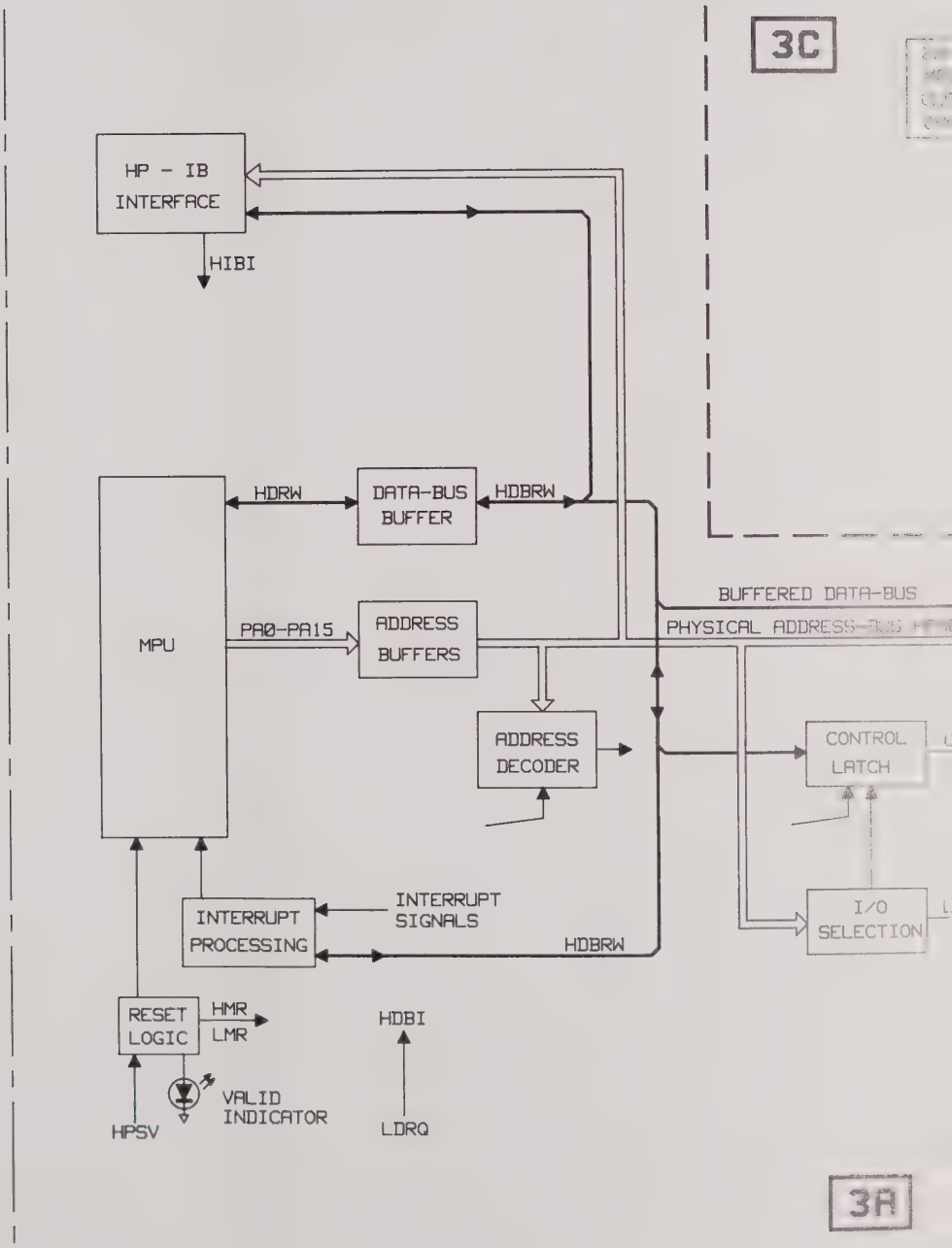

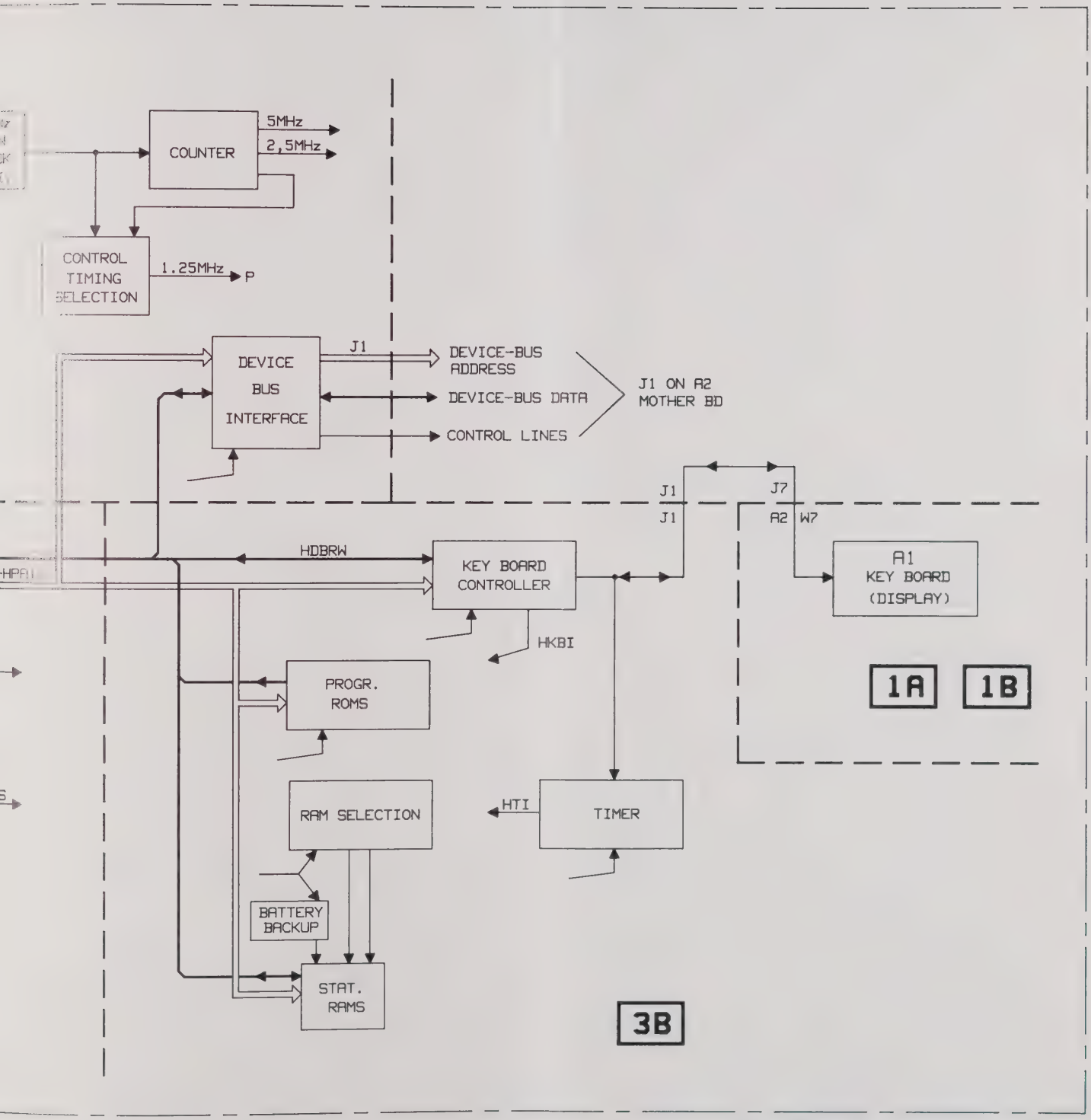

MODEL HP8130A/31A FIGURE 6.3-2.
CPU BOARD BLOCK DIAGRAM

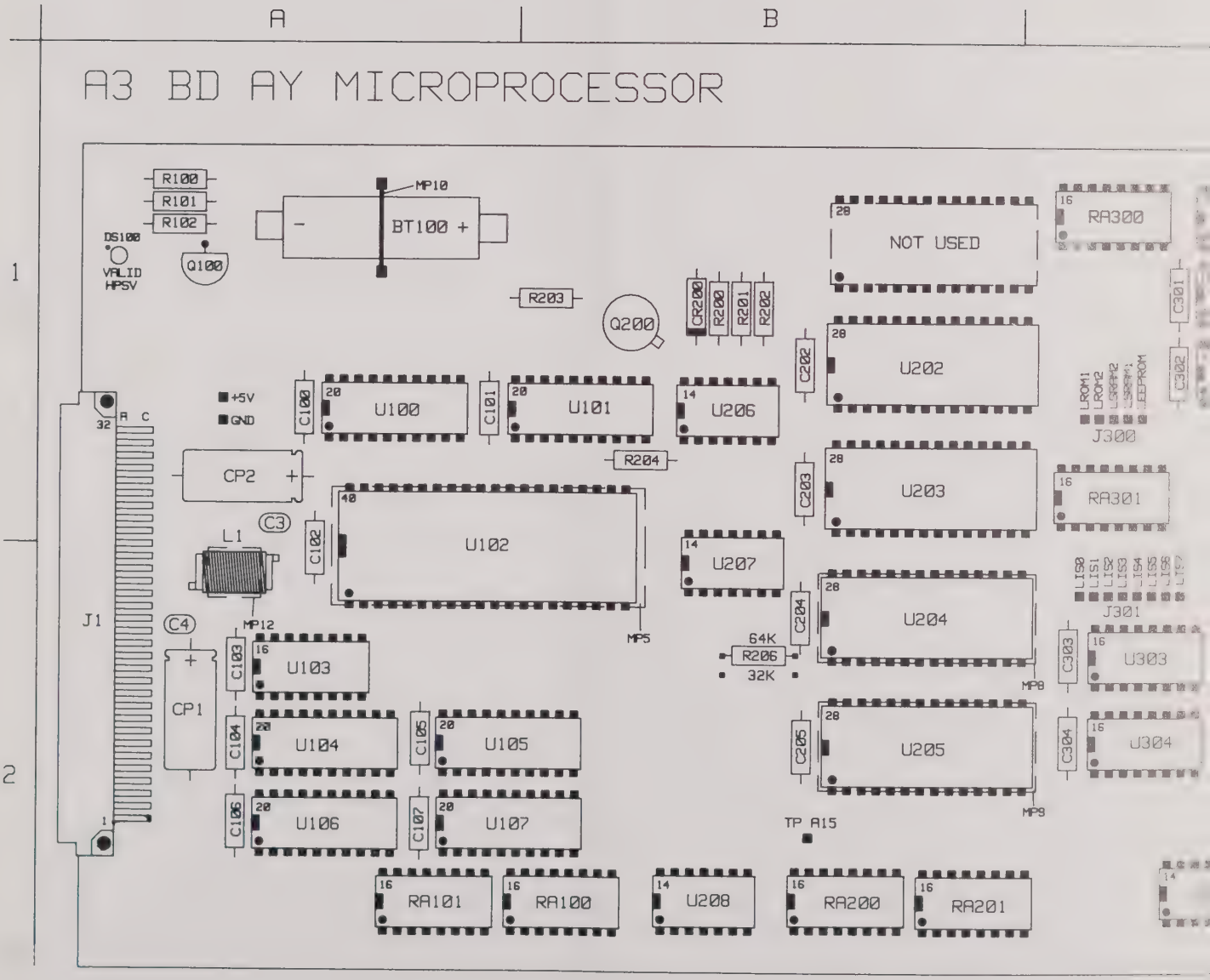
A
B
A3 BD AY MICROPROCESSOR
1
2
R100
R101
R102
DS100
VALID
HPSV
Q100
MP10
BT100
R203
Q200
CR200
R200
R201
R202
NOT USED
RA300
C301
C302
C202
U202
LROM1
LROM2
LSRAM2
LSRAM1
LEEPROM
J300
+5V
GND
C100
U100
C101
U101
U206
R204
CP2
C203
U203
RA301
C3
L1
C102
U102
U207
LIS0
LIS1
LIS2
LIS3
LIS4
LIS5
LIS6
LIS7
J301
J1
C4
MP12
MP5
C204
U204
64K
R206
32K
C303
U303
C103
U103
CP1
MP8
C104
U104
C105
U105
C205
U205
C304
U304
C106
U106
C107
U107
MP9
TP A15
RA101
RA100
U208
RA200
RA201

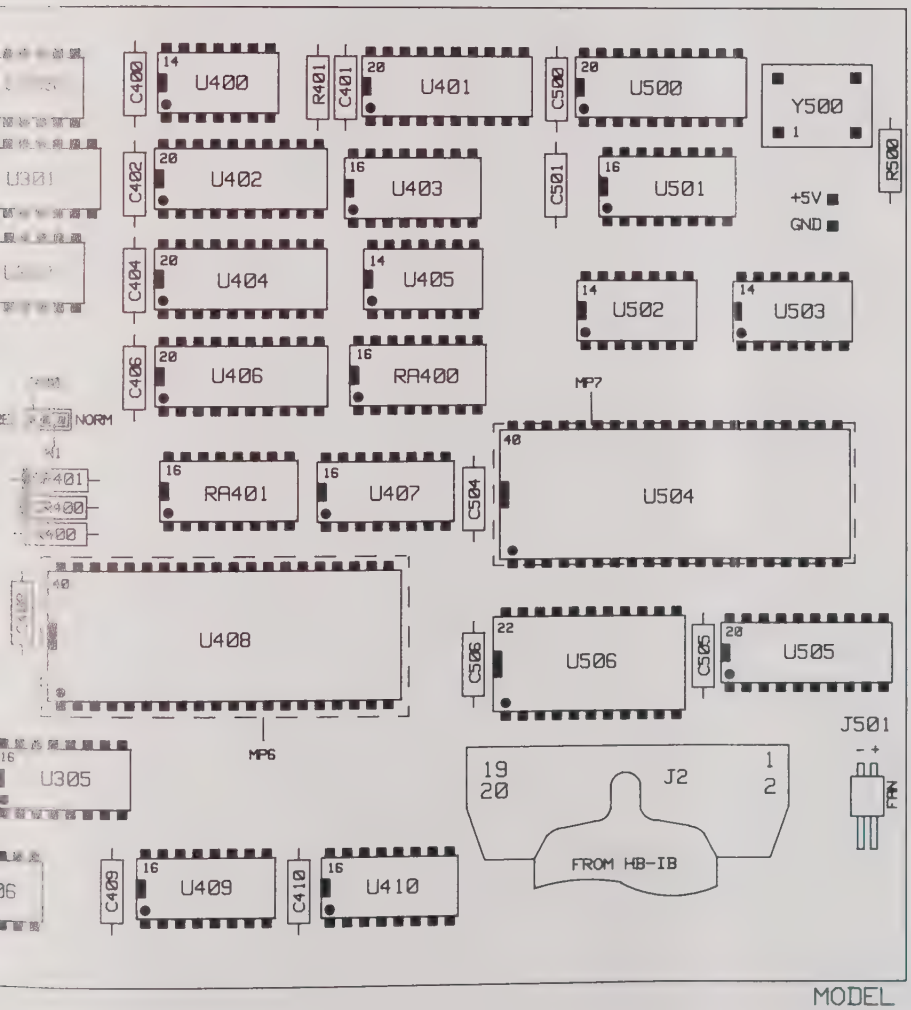

REF. DES.	GRID LOC.
BT100	A1
CP1	A2
CP2	A1
C3	A1
C4	A2
C100	A1
C101	A1
C102	A1
C103	A2
C104	A2
C105	A2
C106	A2
C107	A2
C202	B1
C203	B1
C204	B2
C205	B2
C301	C1
C302	C1
C303	C2
C304	C2
C400	C1
C401	D1
C402	C1
C404	C1
C406	C1
C408	C2
C409	C2
C410	C2
C500	D1
C501	D1
C504	D2
C505	D2
C506	D2
CR200	B1
CR400	C2
CR401	C1
DS100	A1
J1	A2
J2	D2
J400	C1
J501	D2
L1	A2

REF. DES.	GRID LOC.
MP5	B2
MP6	C2
MP7	D1
MP8	C2
MP9	C2
MP10	A1
MP12	A2
Q100	A1
Q200	B1
R100	A1
R101	A1
R102	A1
R200	B1
R201	B1
R202	B1
R203	B1
R204	B1
R206	B2
R400	C2
R401	C1
R500	D1
RA100	B2
RA101	A2
RA200	B2
RA201	B2
RA300	C1
RA301	C1
RA400	D1
RA401	C2
U100	A1
U101	B1
U102	A/B1
U103	A2
U104	A2
U105	B2
U106	A2
U107	B2
U202	B1
U203	B1
U204	B1
U205	B1
U206	B1
U207	B2
U208	B2
U300	C1

REF. DES.	GRID LOC.
U301	C1
U302	C1
U303	C2
U304	C2
U305	C2
U306	C2
U400	C1
U401	D1
U402	C1
U403	D1
U404	C1
U405	D1
U406	C1
U407	B2
U408	C2
U409	C2
U410	D2
U500	D1
U501	D1
U502	D1
U503	D1
U504	D2
U505	D2
U506	D2
W1	C1
Y500	D1

MODEL HP8130A/31A FIGURE 6.3-3.
CPU BOARD CONPONENT LAYOUT

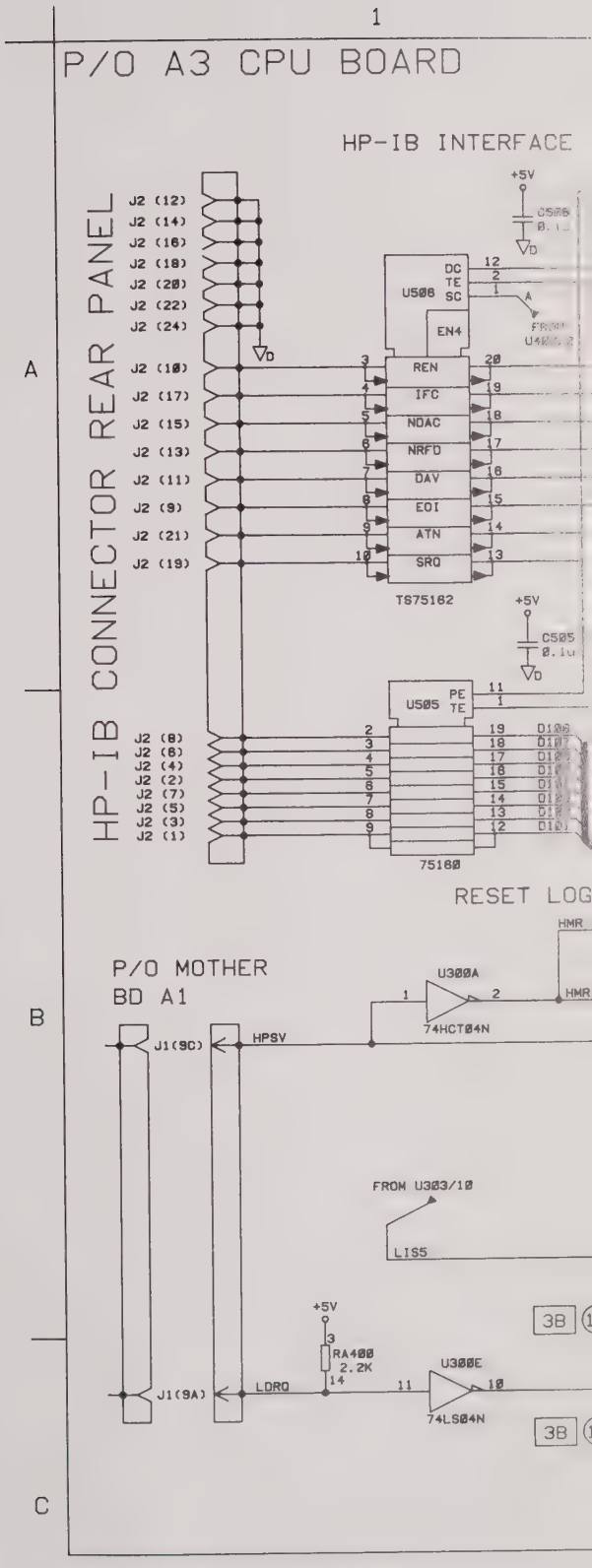
1
P/O A3 CPU BOARD
HP-IB INTERFACE
HP-IB CONNECTOR REAR PANEL
J2 (12)
J2 (14)
J2 (16)
J2 (18)
J2 (20)
J2 (22)
J2 (24)
J2 (10)
J2 (17)
J2 (15)
J2 (13)
J2 (11)
J2 (9)
J2 (21)
J2 (19)
J2 (8)
J2 (6)
J2 (4)
J2 (2)
J2 (7)
J2 (5)
J2 (3)
J2 (1)
+5V
C506
0.1u
U506
DC
TE
SC
EN4
REN
IFC
NDAC
NRFD
DAV
EOI
ATN
SRQ
TS75162
C505
0.1u
U505
PE
TE
75160
RESET LOG
HMR
P/O MOTHER
BD A1
U300A
74HCT04N
J1(9C)
HPSV
FROM U303/10
LIS5
3B
RA400
2.2K
U300E
J1(9A)
LDRQ
74LS04N
A
B
C

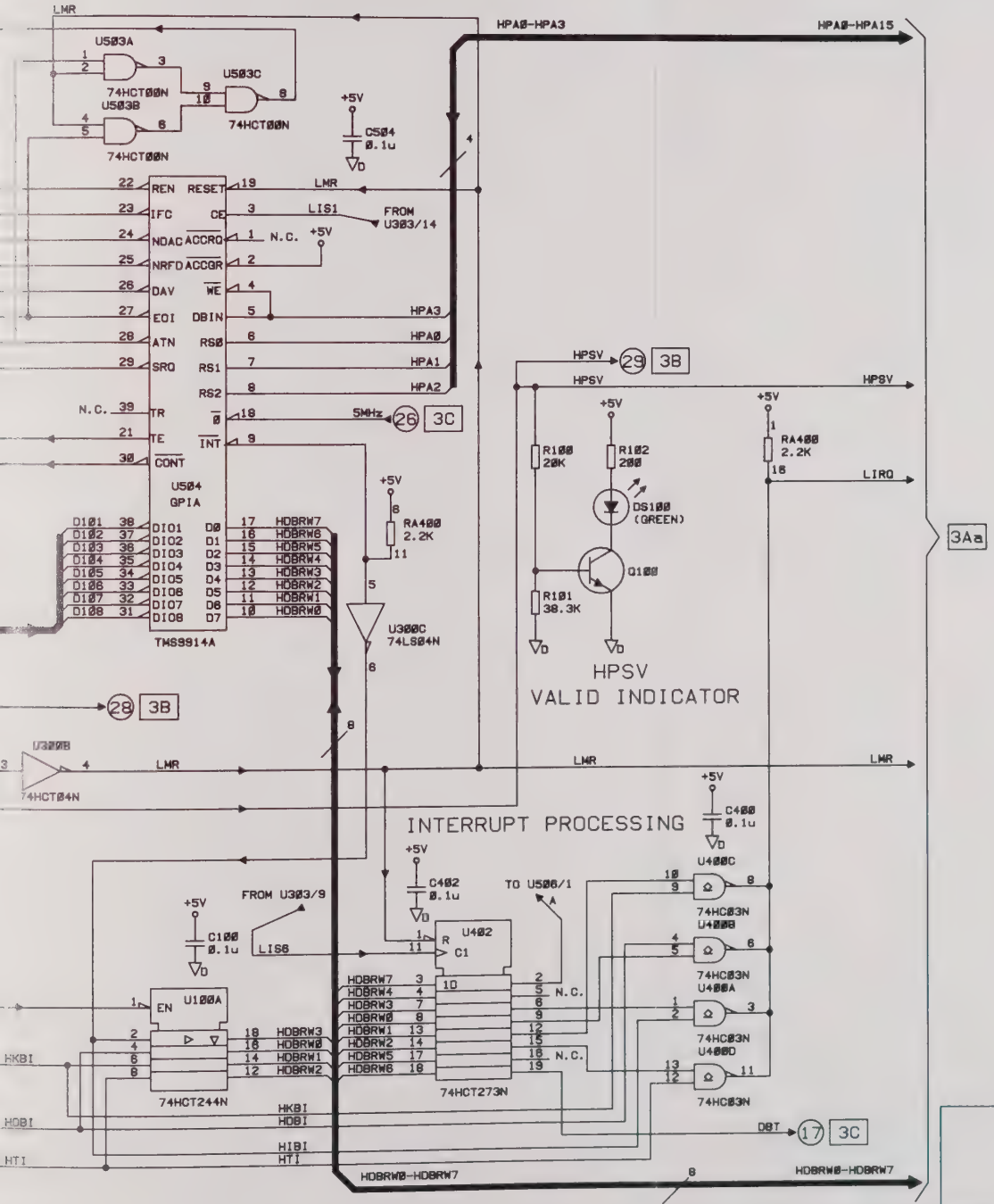

3A

MODEL HP8130A/31A
FIGURE 6.3-4.
CPU BD SCHEMATICS (SHEET 1 OF 5)

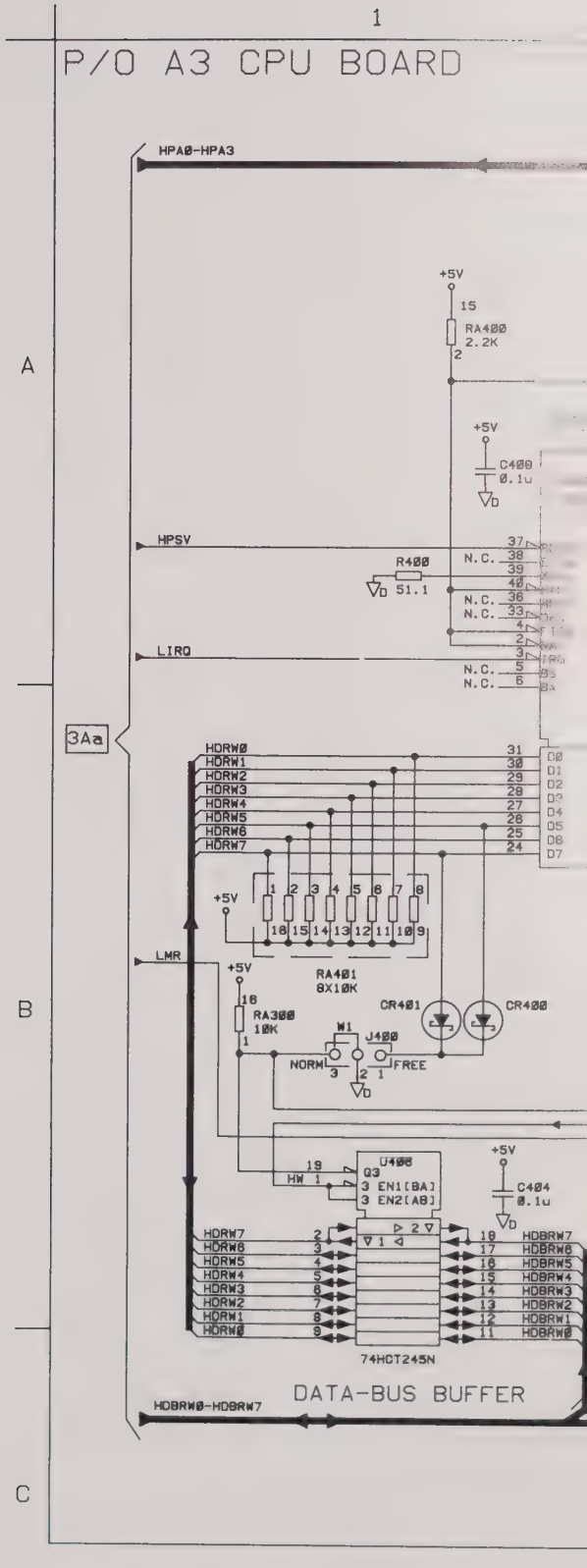
1
P/O A3 CPU BOARD
A
B
C
HPA0-HPA3
+5V
15
RA400
2.2K
2
C400
0.1u
HPSV
R400
51.1
N.C.
LIRQ
3Aa
HDRW0
HDRW1
HDRW2
HDRW3
HDRW4
HDRW5
HDRW6
HDRW7
D0
D1
D2
D3
D4
D5
D6
D7
RA401
8X10K
LMR
RA300
10K
CR401
CR400
W1
J400
NORM
FREE
U400
G3
EN1[BA]
EN2[AB]
HW 1
C404
0.1u
HDBRW7
HDBRW6
HDBRW5
HDBRW4
HDBRW3
HDBRW2
HDBRW1
HDBRW0
74HCT245N
DATA-BUS BUFFER
HDBRW0-HDBRW7

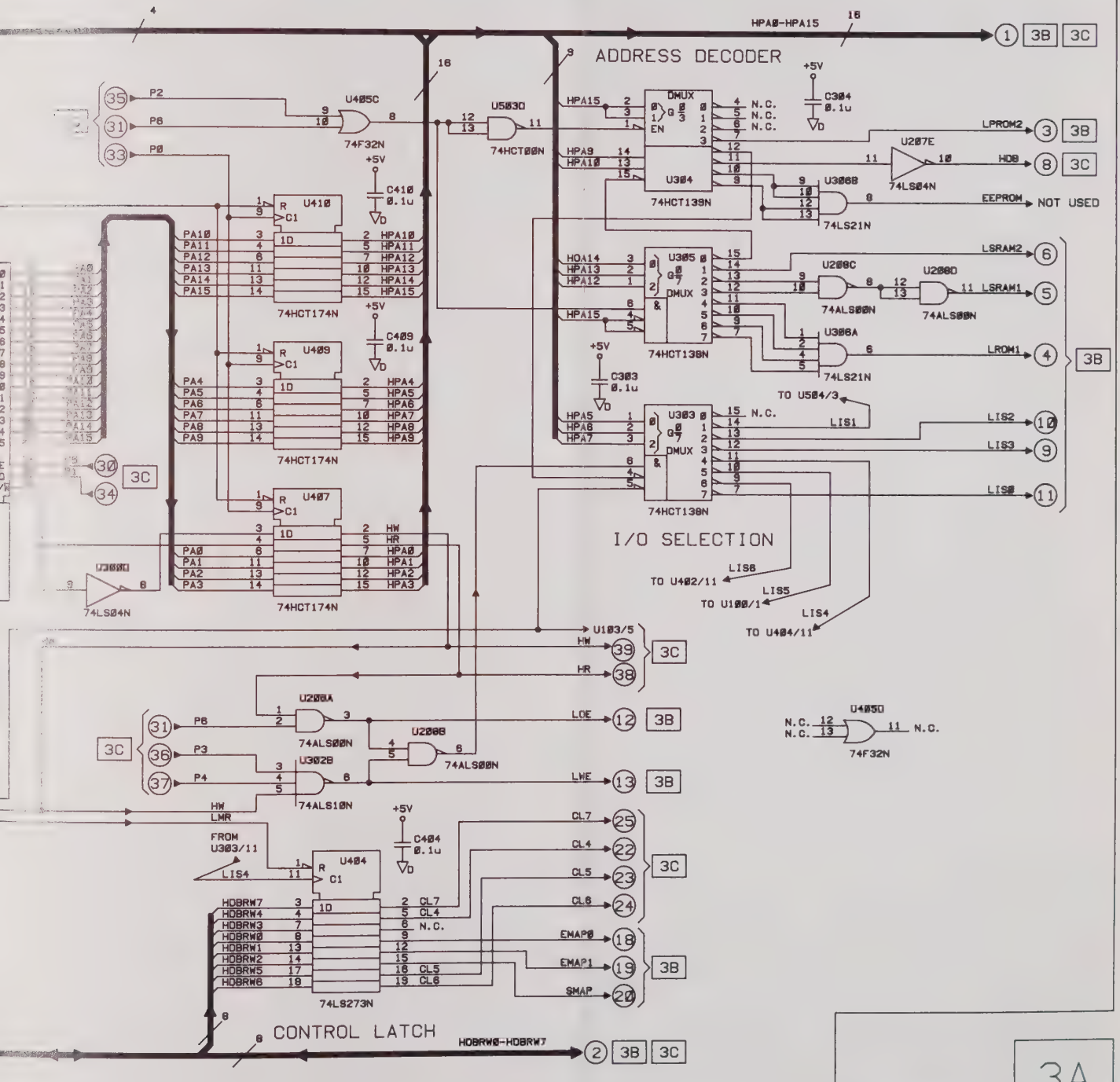

3A

MODEL HP8130A/31A
FIGURE 6.3-5.
CPU BD SCHEMATICS (SHEET 2 OF 5)
CPU (A3)

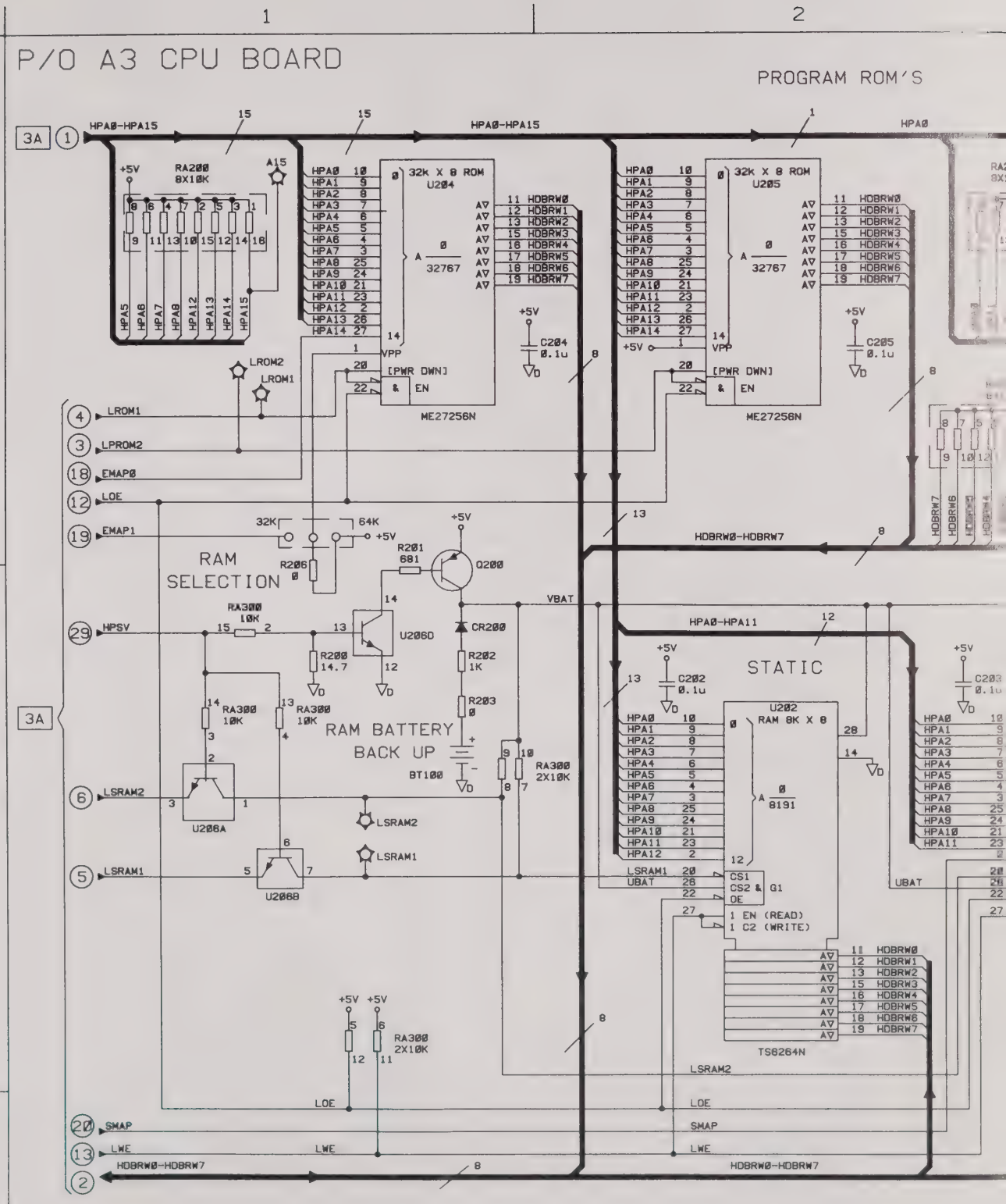
P/O A3 CPU BOARD
PROGRAM ROM'S
STATIC
RAM SELECTION
RAM BATTERY BACK UP
32k X 8 ROM U204
32k X 8 ROM U205
RAM 8K X 8 U202
ME27256N
TS6264N
HPA0-HPA15
HPA0-HPA11
HDBRW0-HDBRW7
LROM1
LROM2
LPROM2
EMAP0
EMAP1
LOE
HPSV
LSRAM1
LSRAM2
SMAP
LWE
VBAT
UBAT
[PWR DWN]
RA200 8X10K
RA300 10K
RA300 2X10K
U206A
U206B
U206D
CR200
Q200
R200 14.7
R201 681
R202 1K
R203 0
R206 0
BT100
C202 0.1u
C203 0.1u
C204 0.1u
C205 0.1u
3A
A
B
C

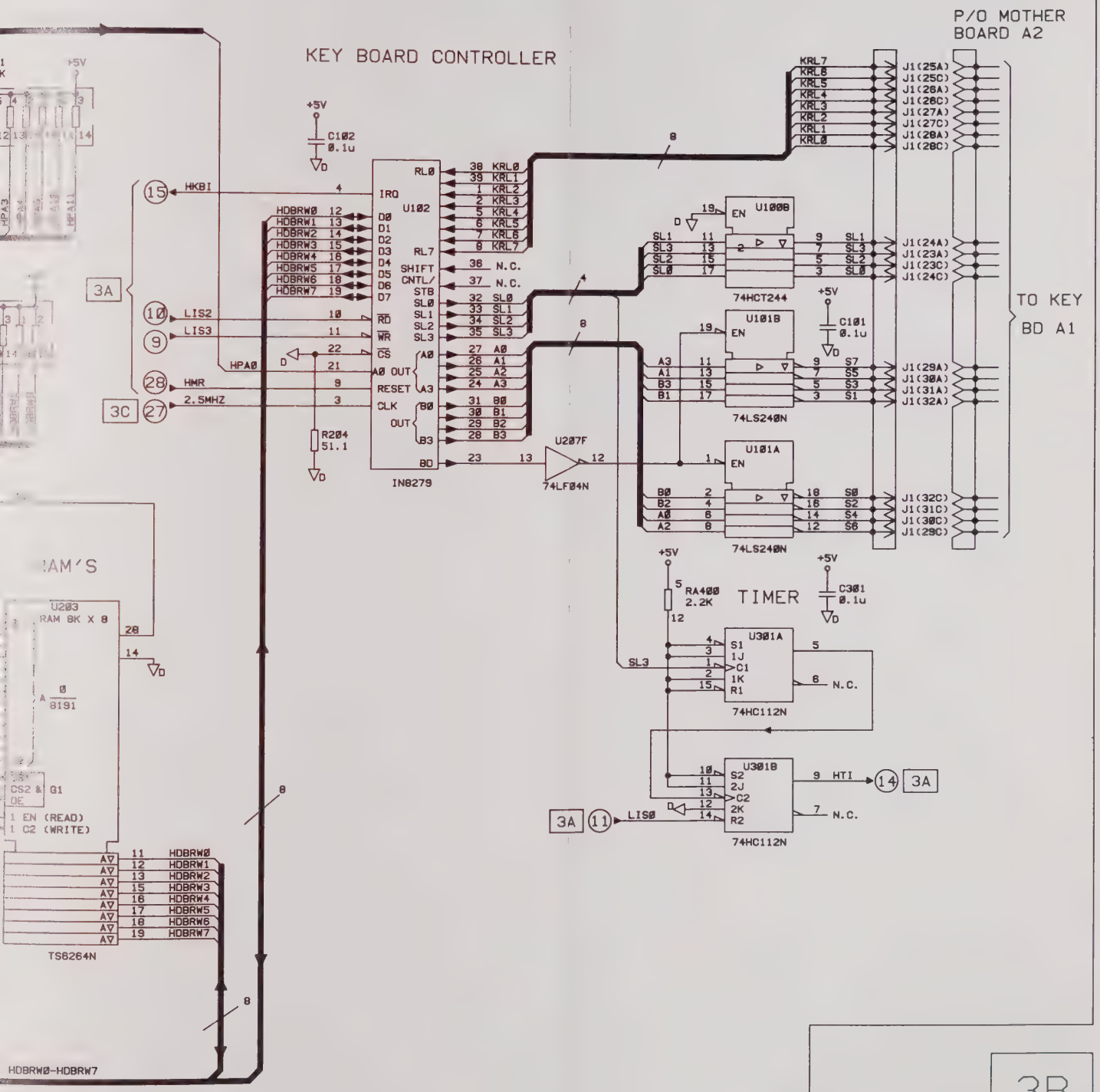

3B

MODEL HP8130A/31A
FIGURE 6.3-6.
CPU BD SCHEMATICS (SHEET 3 OF 5)

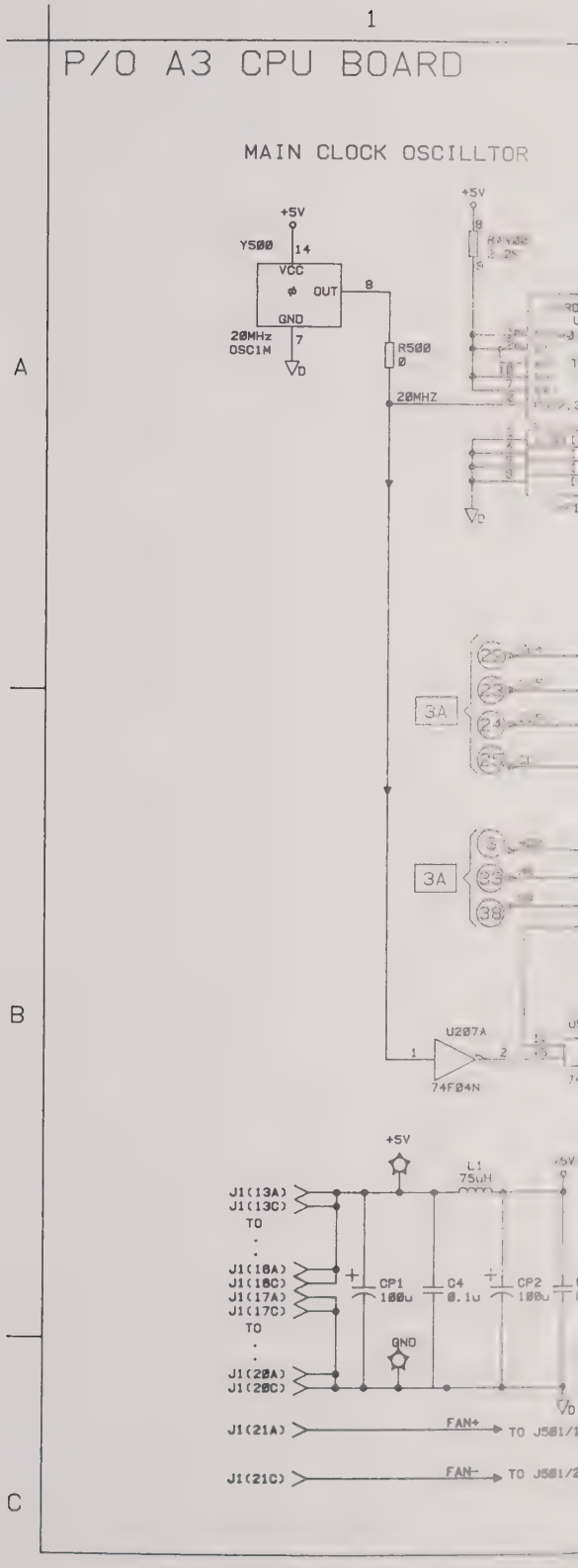
1
P/O A3 CPU BOARD
MAIN CLOCK OSCILLTOR
A
B
C
+5V
Y500
14
VCC
OUT
8
GND
20MHz
OSC1M
7
R500
0
20MHZ
3A
3A
U207A
74F04N
+5V
L1
75uH
J1(13A)
J1(13C)
TO
J1(18A)
J1(18C)
J1(17A)
J1(17C)
TO
J1(20A)
J1(20C)
CP1
100u
C4
0.1u
CP2
100u
GND
J1(21A)
FAN+
J1(21C)
FAN-

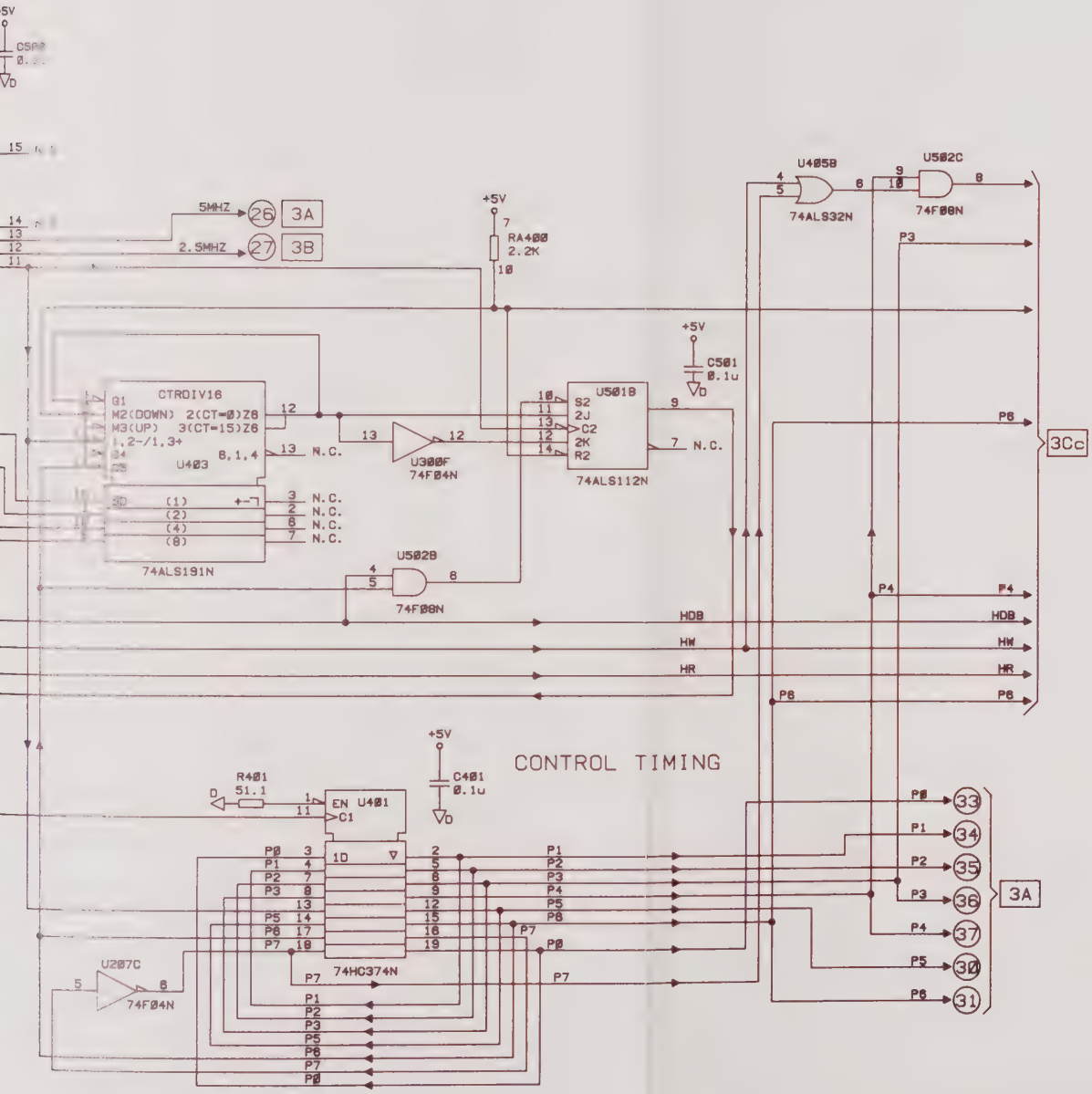

3C

MODEL HP8130A/31A
FIGURE 6.3-7.
CPU BD SCHEMATICS (SHEET 4 OF 5)
CPU (A3)

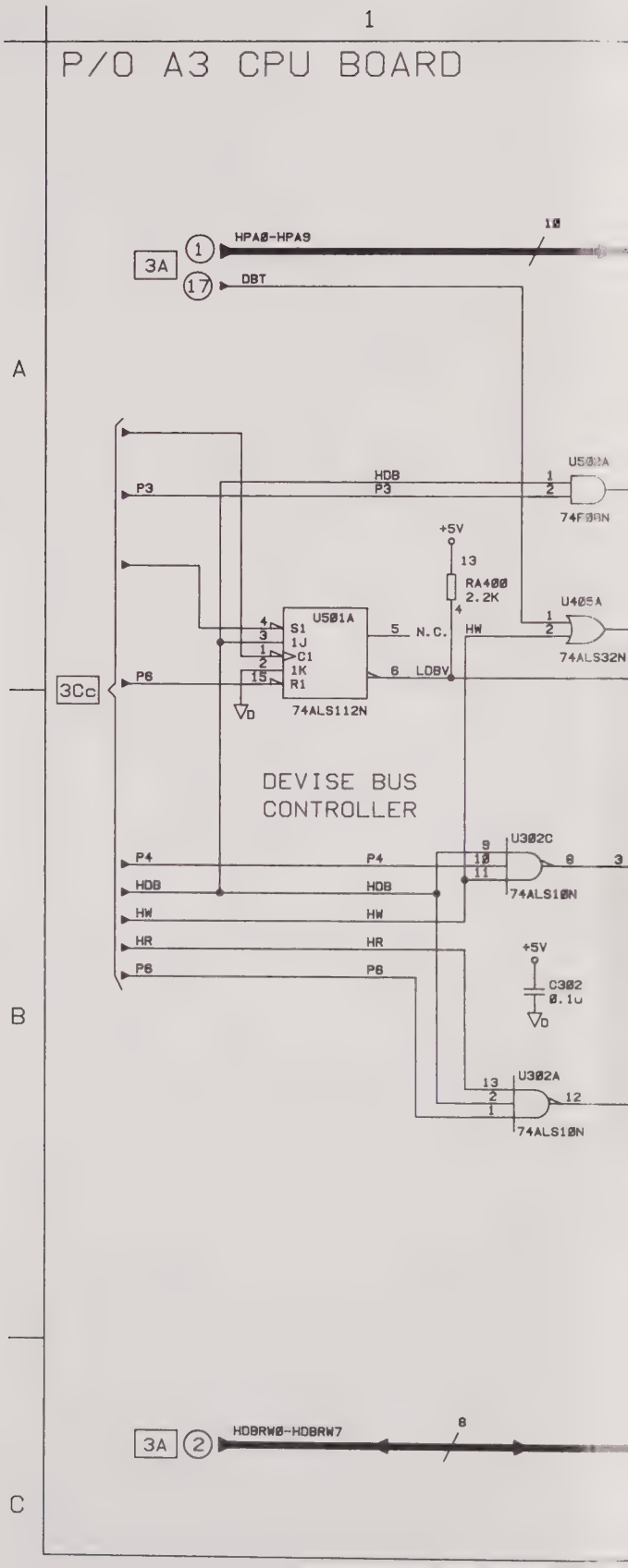
1
P/O A3 CPU BOARD
A
B
C
3A
HPA0-HPA9
10
DBT
HDB
P3
U502A
74F00N
+5V
13
RA400
2.2K
U405A
74ALS32N
U501A
S1
1J
C1
1K
R1
5 N.C.
6 LDBV
HW
74ALS112N
3Cc
P6
DEVISE BUS
CONTROLLER
P4
HDB
HW
HR
P6
U302C
74ALS10N
C302
0.1u
U302A
74ALS10N
HDBRW0-HDBRW7
8

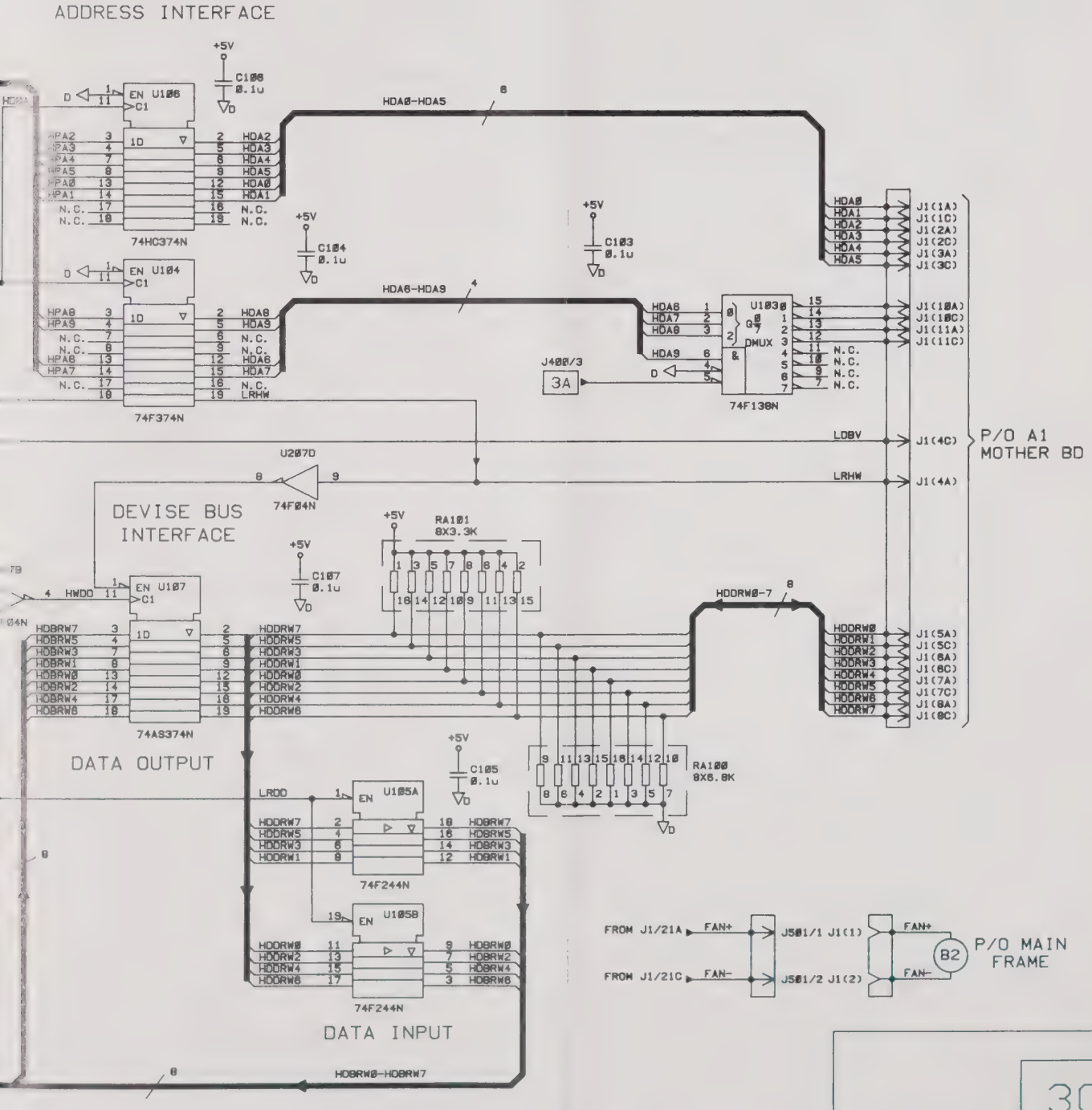

3C

MODEL HP8130A/31A
FIGURE 8.3-8.
CPU BD SCHEMATICS (SHEET 5 OF 5)
CPU (A3)

A1 BD AY KEY

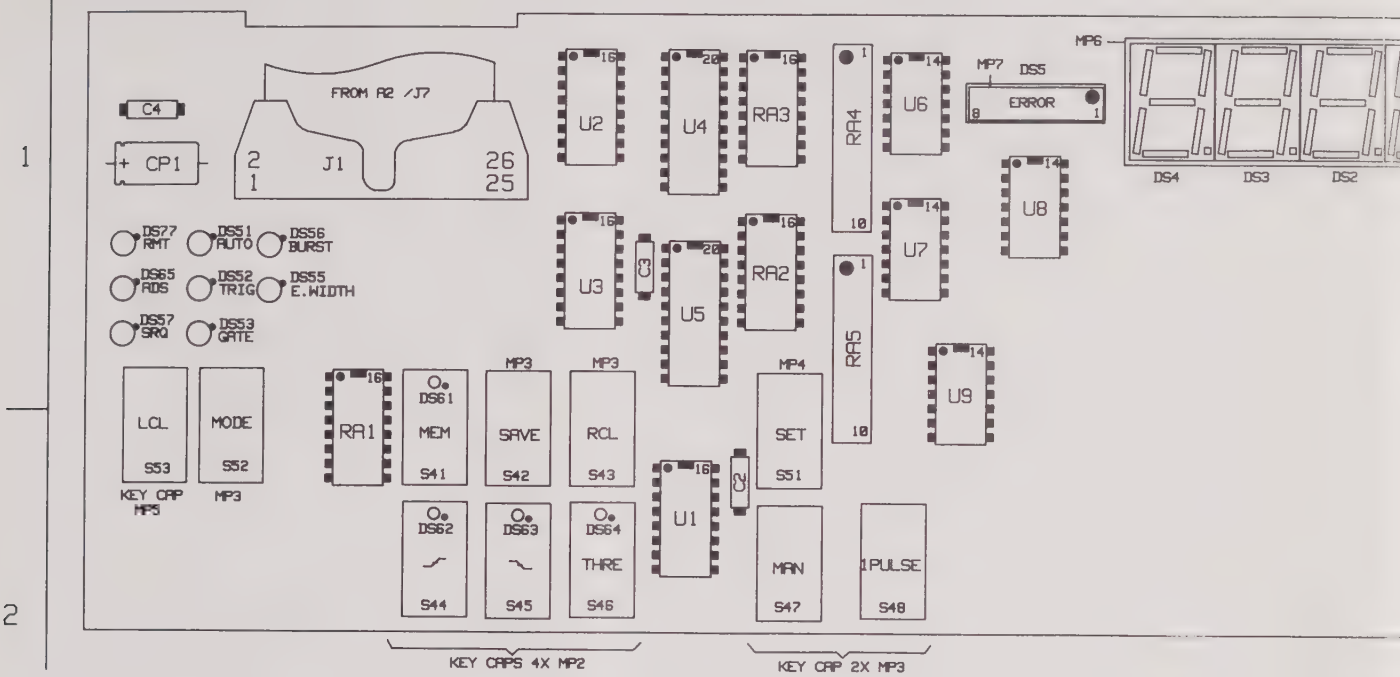

A1 BD AY KEY OPT.020

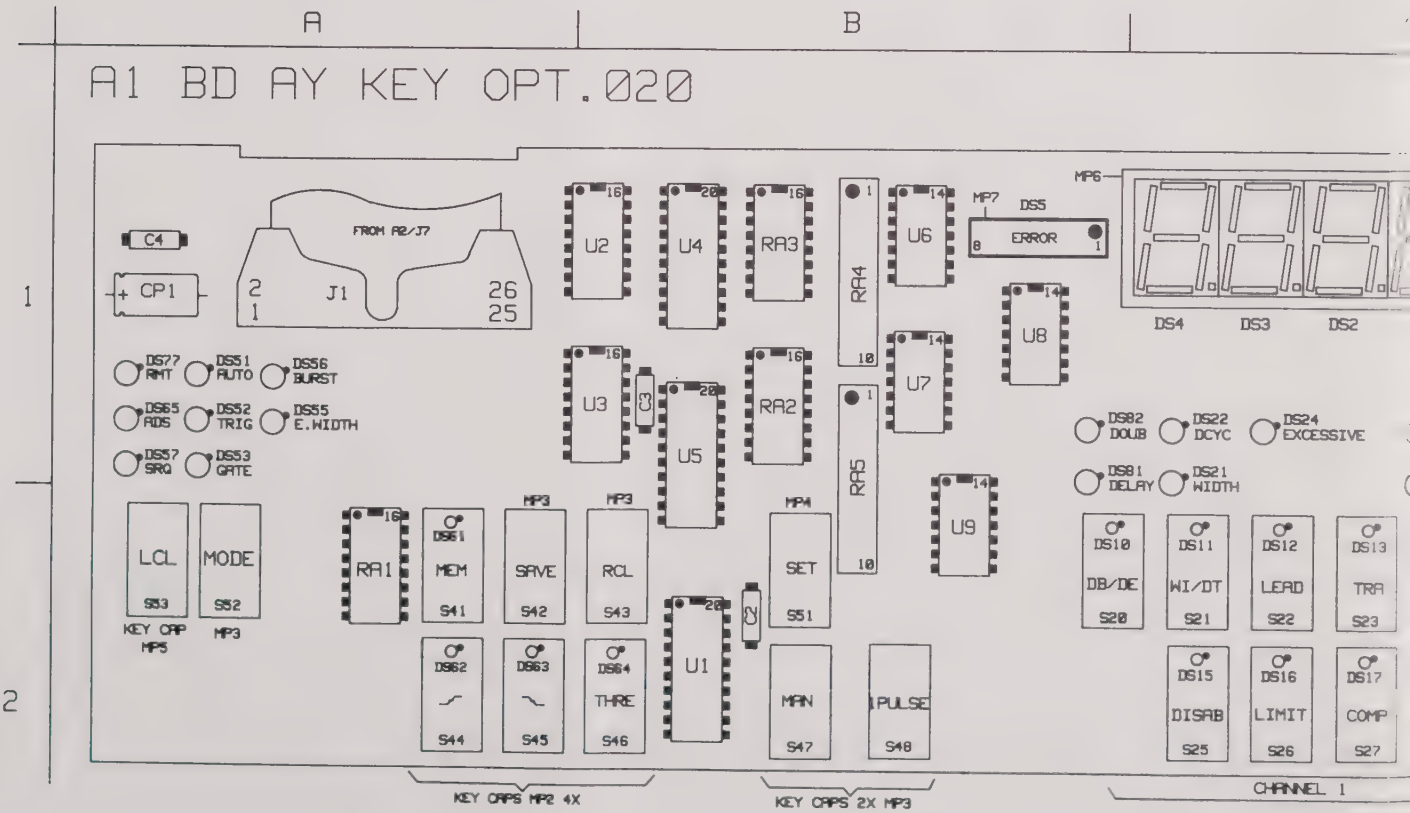

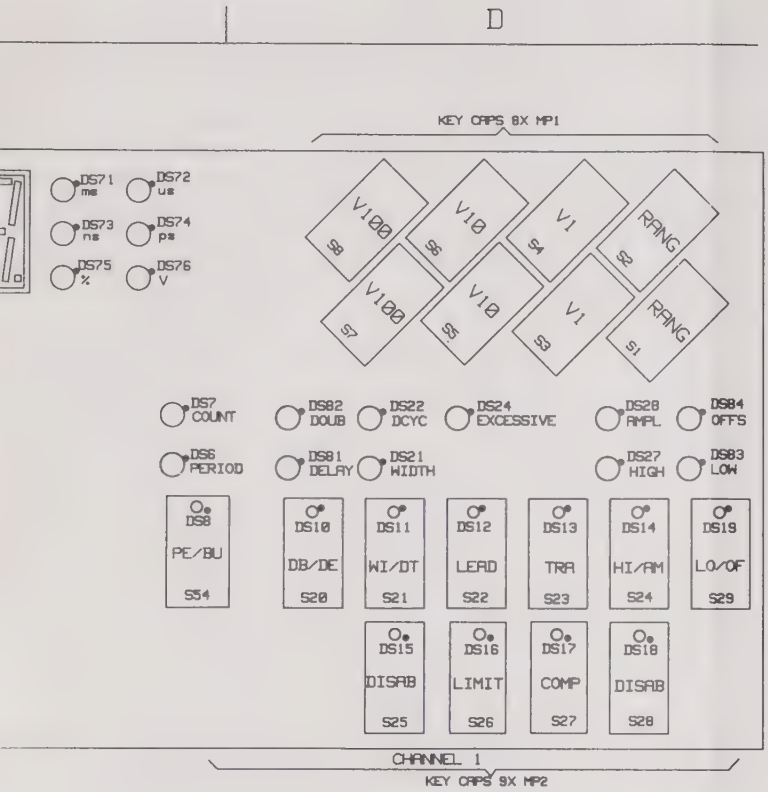

REF. DES.	GRID LOC.	REF. DES.	GRID LOC.	REF. DES.	GRID LOC.
C2	B2	DS64	B2	S23	D2
C3	B2	DS65	A1	S24	D2
C4	A1	DS71	C1	S25	D2
CP1	A1	DS72	C1	S26	D2
		DS73	C1	S27	D2
DS1	C1				
DS2	C1	DS74	C1	S28	D2
DS3	C1	DS75	C1	S29	D2
DS4	C1	DS76	C1	S41	A2
DS5	B1	DS77	A1	S42	A2
		DS81	D1	S43	B2
DS6	D1				
DS7	D1	DS82	D1	S44	A2
DS8	D1	DS83	D1	S45	A2
DS10	D1	DS84	D1	S46	B2
DS11	D1			S47	B2
		J1	A1	S48	B2
DS12	D1				
DS13	D1	MP1	D1	S51	B2
DS14	D1	MP2	A-D2	S52	A2
DS15	D2	MP3	A-B2	S53	A2
DS16	D2	MP4	B1	S54	D2
		MP5	B1		
DS17	D2	MP6	B1	U1	B2
DS18	D2	MP7	B1	U2	B1
DS19	D1			U3	B1
DS21	D1	RA1	A2	U4	B1
DS22	D1	RA2	B1	U5	B1
		RA3	B1		
DS24	D1	RA4	B1	U6	B1
DS27	D1	RA5	B1	U7	B1
DS28	D1			U8	B1
DS51	A1	S1	D1	U9	B1/2
DS52	A1	S2	D1		
		S3	D1		
DS53	A1	S4	D1		
DS55	A1	S5	D1		
DS56	A1				
DS57	A1	S6	D1		
DS61	A2	S7	D1		
		S8	D1		
DS62	A2	S20	D2		
DS63	A2	S21	D2		
		S22	D2		

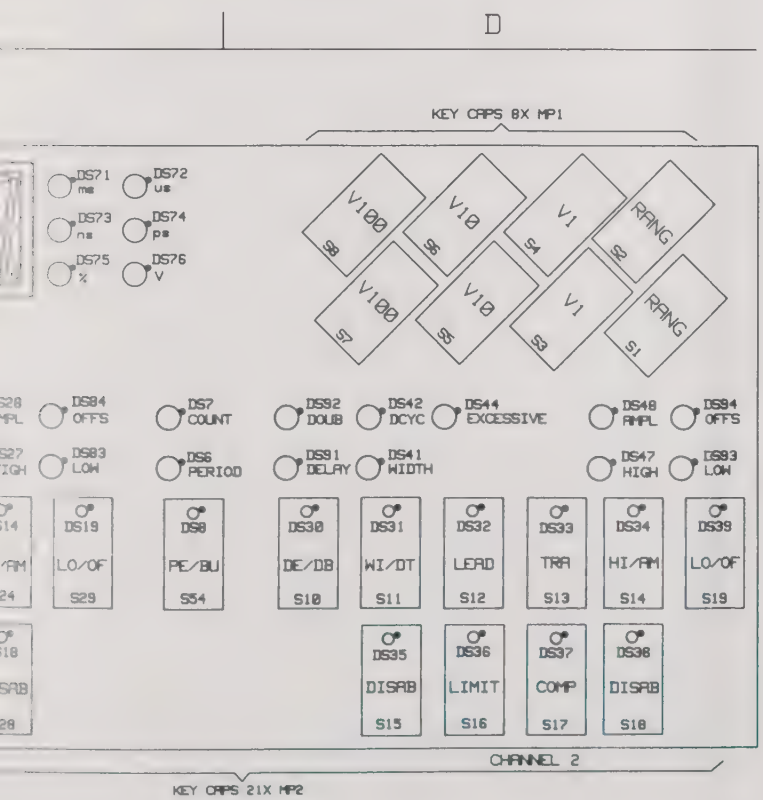

REF. DES.	GRID LOC.	REF. DES.	GRID LOC.	REF. DES.	GRID LOC.	REF. DES.	GRID LOC.
C2	B2	DS39	D2	MP3	A-B2	S28	C2
C3	B2	DS41	D1	MP4	B1	S29	C2
C4	A1	DS42	D1	MP5	B1	S41	A2
CP1	A1	DS44	D1	MP6	B1	S42	A2
		DS47	D2	MP7	B1	S43	B2
DS1	C1						
DS2	C1	DS48	D2	RA1	A2	S44	A2
DS3	C1	DS51	A1	RA2	B1	S45	A2
DS4	C1	DS52	A1	RA3	B1	S46	B2
DS5	B1	DS53	A1	RA4	B1	S47	B2
		DS55	A1	RA5	B1	S48	B2
DS6	D1						
DS7	D1	DS56	A1	S1	D1	S51	B2
DS8	D2	DS57	A1	S2	D1	S52	A2
DS10	B2	DS61	A2	S3	D1	S53	A2
DS11	C2	DS62	A2	S4	D1	S54	D2
		DS63	A2	S5	D1		
DS12	C2					U1	B2
DS13	C2	DS64	B2	S6	D1	U2	B1
DS14	C2	DS65	A1	S7	D1	U3	B1
DS15	C2	DS71	C1	S8	D1	U4	B1
DS16	C2	DS72	C1	S10	D2	U5	B1
		DS73	C1	S11	D2		
DS17	C2					U6	B1
DS18	C2	DS74	C1	S12	D2	U7	B1
DS19	C2	DS75	C1	S13	D2	U8	B1
DS21	C1	DS76	C1	S14	D2	U9	B1/2
DS22	C1	DS77	A1	S15	D2		
		DS81	C1	S16	D2		
DS24	C1	DS82	C1	S17	D2		
DS27	C1	DS83	C1	S18	D2		
DS28	C1	DS84	C1	S19	D2		
DS30	D2	DS91	D1	S20	B2		
DS31	D2	DS92	D1	S21	C2		
DS32	D2	DS93	D1	S22	C2		
DS33	D2	DS94	D1	S23	C2		
DS34	D2			S24	C2		
DS35	D2	J1	A1	S25	C2		
DS36	D2			S26	C2		
DS37	D2	MP1	D1	S27	C2		
DS38	D2	MP2	A-D2				

MODEL HP8130A FIGURE 6.3-9.
KEYBOARD COMPONENT LAYOUT
(STANDART AND OPT.020) CPU BD (A3)

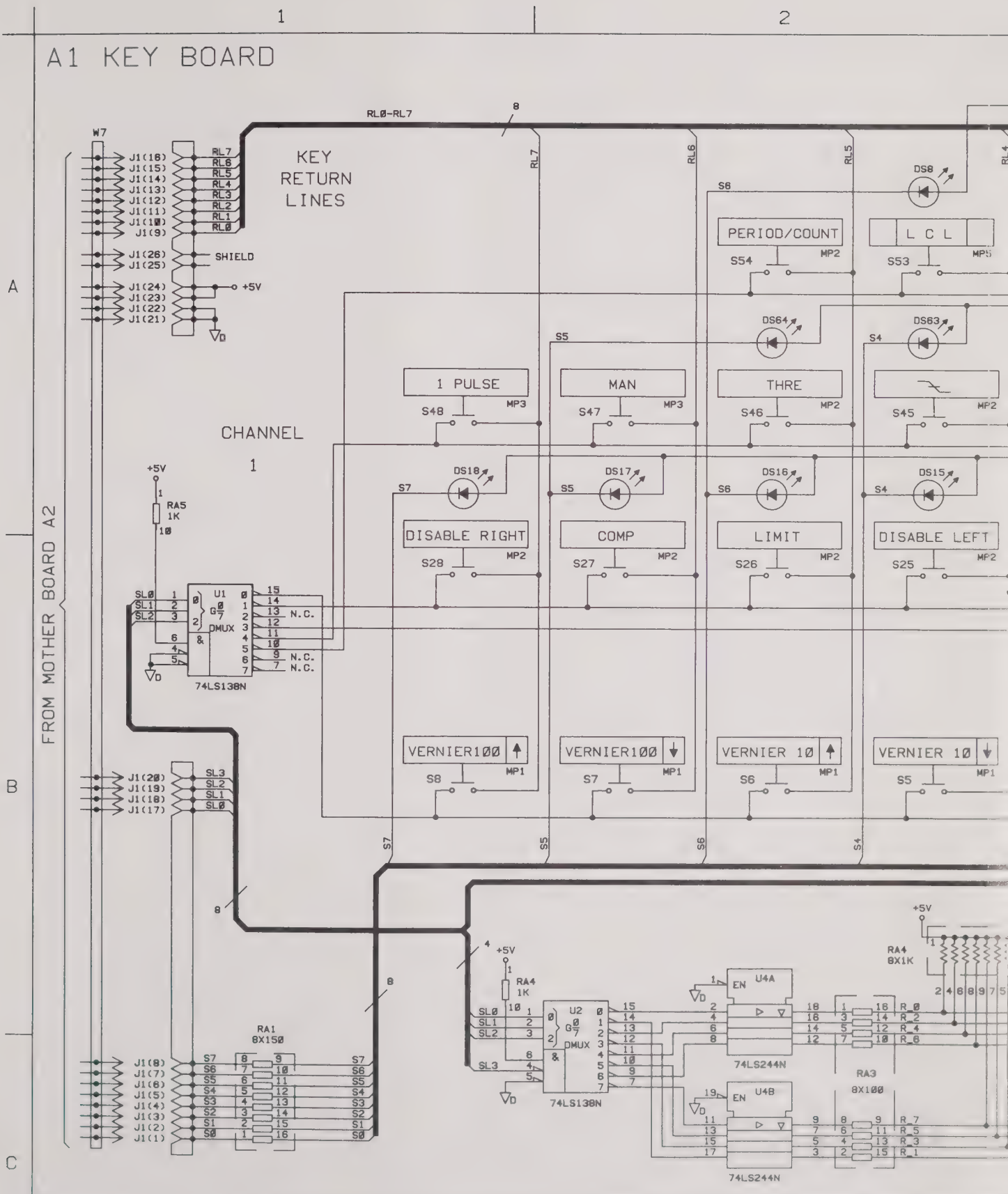
A1 KEY BOARD
1
2
A
B
C
FROM MOTHER BOARD A2
W7
RL0-RL7
KEY RETURN LINES
SHIELD
+5V
CHANNEL 1
RA5 1K
U1 74LS138N
DMUX
N.C.
1 PULSE
MAN
THRE
PERIOD/COUNT
L C L
DISABLE RIGHT
COMP
LIMIT
DISABLE LEFT
VERNIER100
VERNIER 1
S48
S47
S46
S45
S54
S53
S28
S27
S26
S25
S8
S7
S6
S5
DS18
DS17
DS16
DS15
DS64
DS63
DS8
MP1
MP2
MP3
RA1 8X150
RA4 1K
RA4 8X1K
RA3 8X100
U2 74LS138N
U4A
U4B
74LS244N
EN

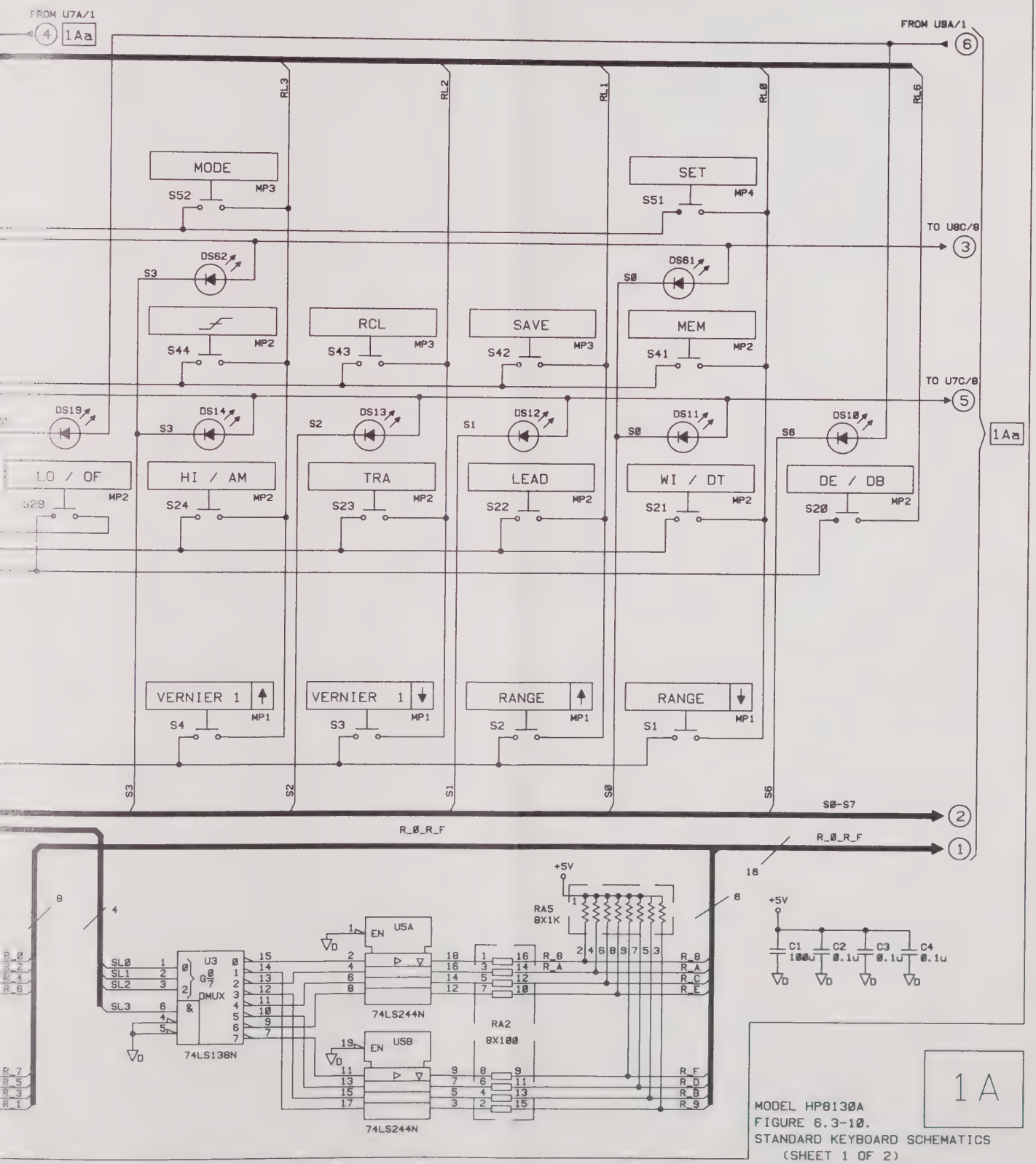

1A

MODEL HP8130A
FIGURE 6.3-10.
STANDARD KEYBOARD SCHEMATICS
(SHEET 1 OF 2)

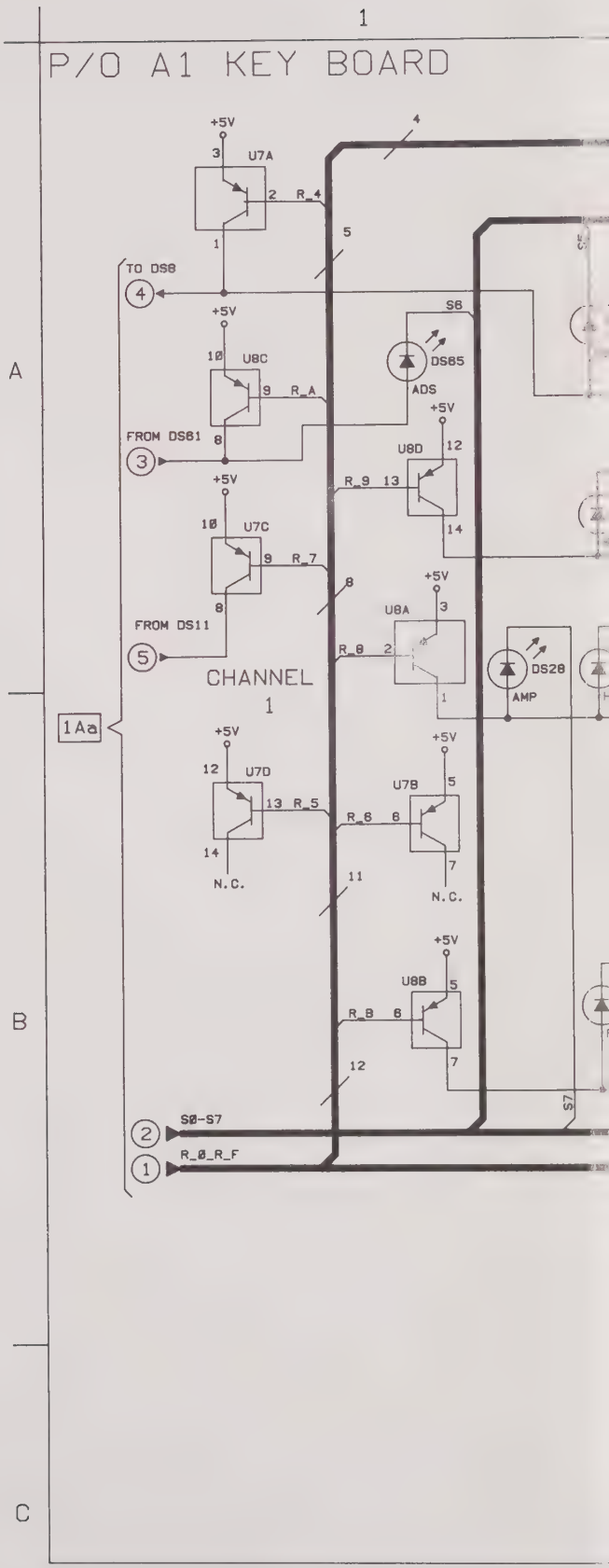
1
P/O A1 KEY BOARD
A
B
C
+5V
U7A
R_4
TO DS8
S6
DS85
ADS
U8C
R_A
FROM DS81
U8D
R_9
U7C
R_7
U8A
R_8
FROM DS11
DS28
AMP
CHANNEL
1
1Aa
U7D
R_5
N.C.
U7B
R_6
N.C.
U8B
R_8
S0-S7
R_0_R_F

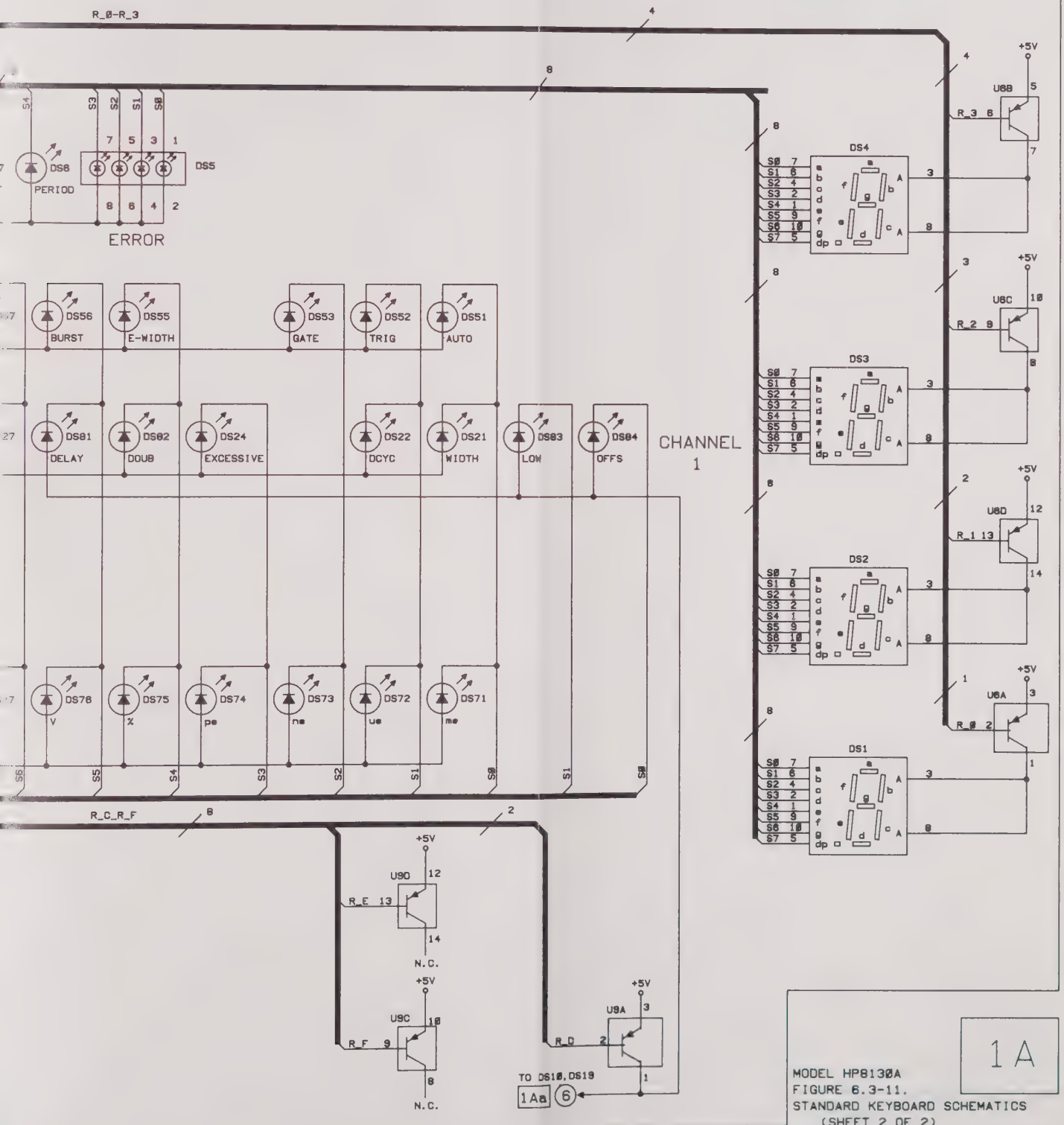

1A

MODEL HP8130A
FIGURE 6.3-11.
STANDARD KEYBOARD SCHEMATICS
(SHEET 2 OF 2)

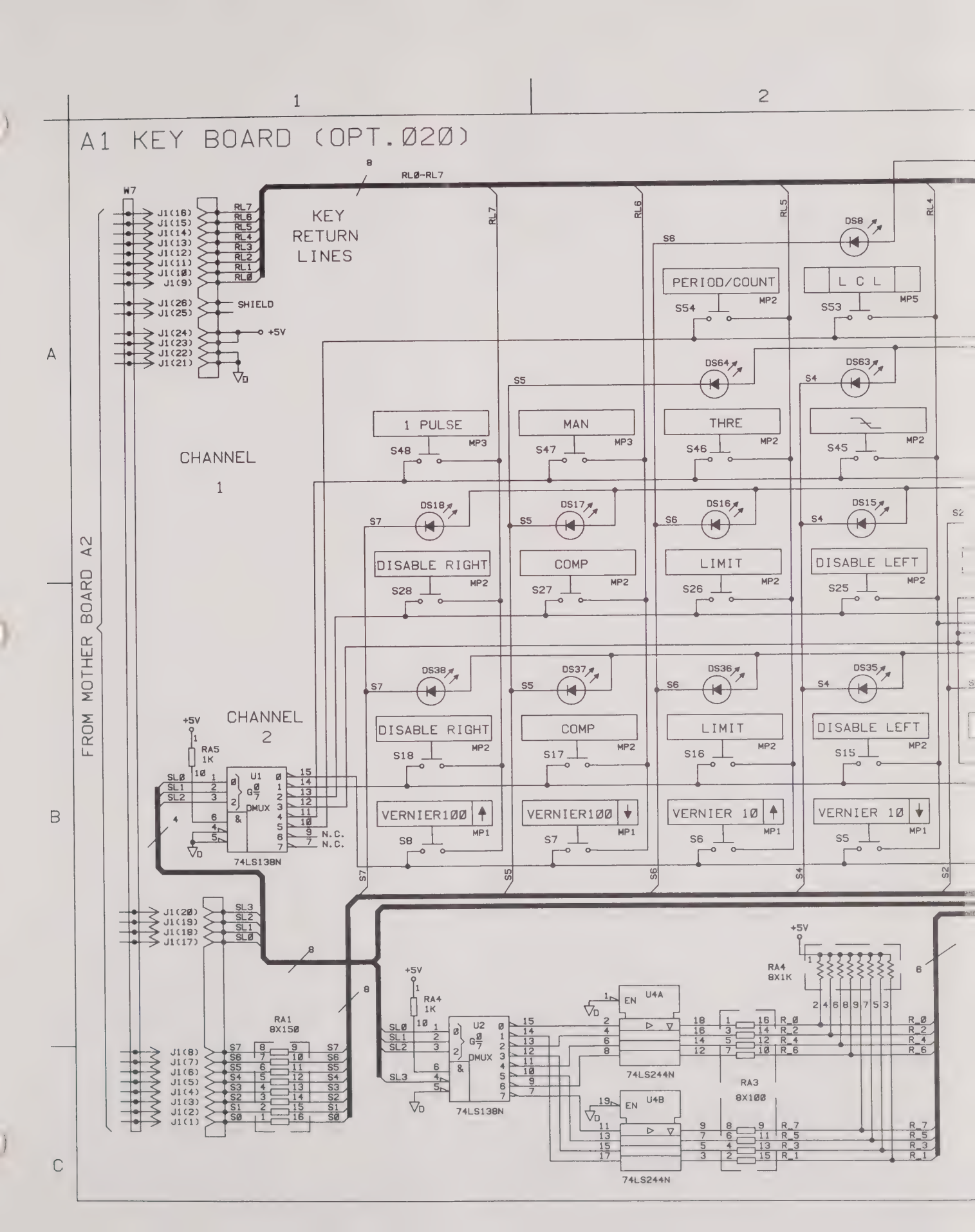
A1 KEY BOARD (OPT.020)
1
2
A
B
C
FROM MOTHER BOARD A2
W7
J1(18)
J1(15)
J1(14)
J1(13)
J1(12)
J1(11)
J1(10)
J1(9)
J1(26)
J1(25)
J1(24)
J1(23)
J1(22)
J1(21)
RL7
RL6
RL5
RL4
RL3
RL2
RL1
RL0
SHIELD
+5V
8
RL0-RL7
KEY
RETURN
LINES
CHANNEL
1
CHANNEL
2
S6
S5
S4
S7
S2
DS8
DS64
DS63
DS18
DS17
DS16
DS15
DS38
DS37
DS36
DS35
PERIOD/COUNT
MP2
S54
L C L
MP5
S53
1 PULSE
MP3
S48
MAN
MP3
S47
THRE
MP2
S46
MP2
S45
DISABLE RIGHT
MP2
S28
COMP
MP2
S27
LIMIT
MP2
S26
DISABLE LEFT
MP2
S25
DISABLE RIGHT
MP2
S18
COMP
MP2
S17
LIMIT
MP2
S16
DISABLE LEFT
MP2
S15
VERNIER100
MP1
S8
VERNIER100
MP1
S7
VERNIER 10
MP1
S6
VERNIER 10
MP1
S5
RA5
1K
SL0
SL1
SL2
U1
G0
G7
DMUX
74LS138N
N.C.
N.C.
SL3
RA1
8X150
RA4
1K
U2
74LS138N
U4A
U4B
EN
74LS244N
RA4
8X1K
RA3
8X100
R_0
R_2
R_4
R_6
R_7
R_5
R_3
R_1

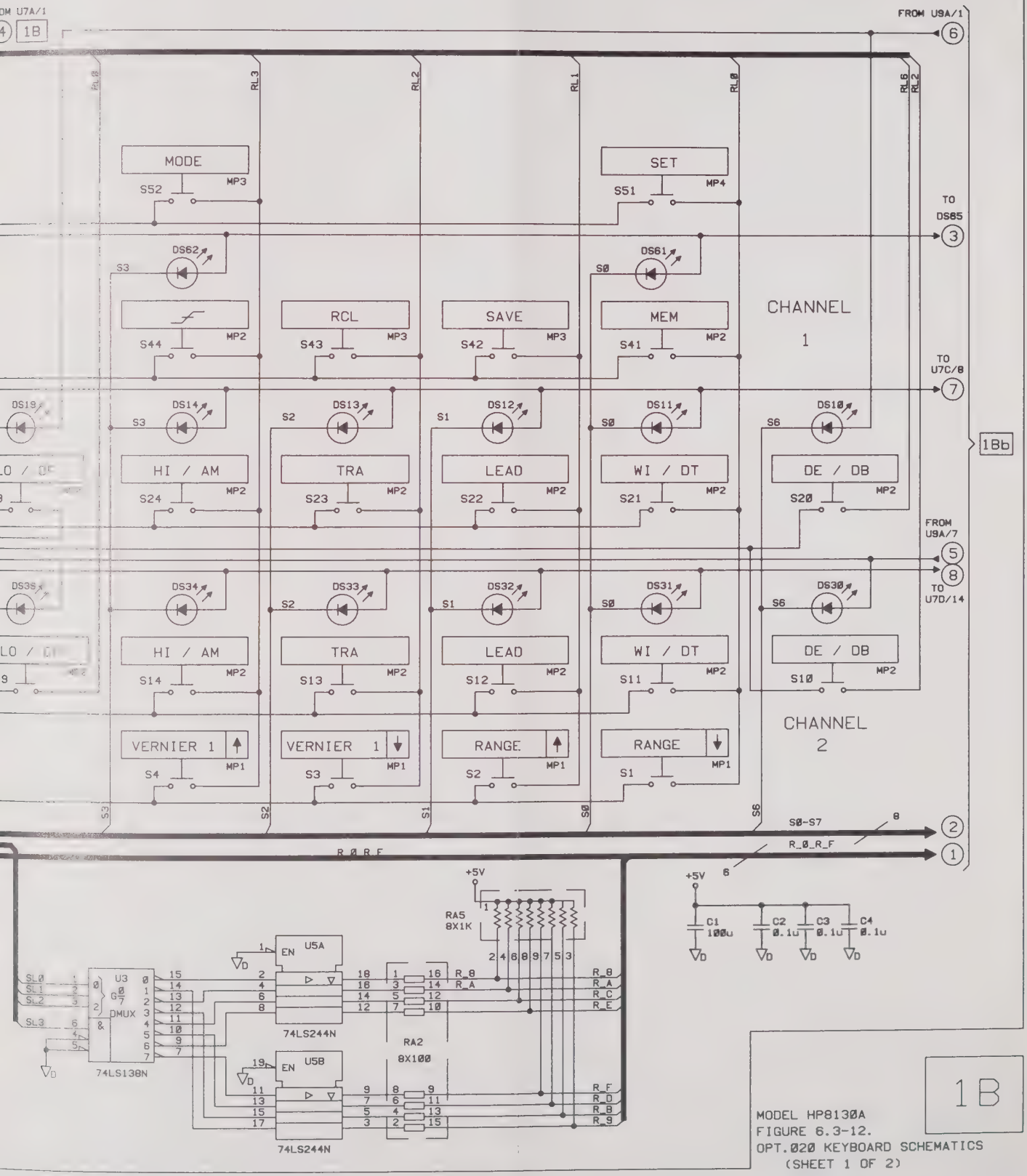

MODEL HP8130A
FIGURE 6.3-12.
OPT.020 KEYBOARD SCHEMATICS
(SHEET 1 OF 2)
CPU BOARD (A3)

1B

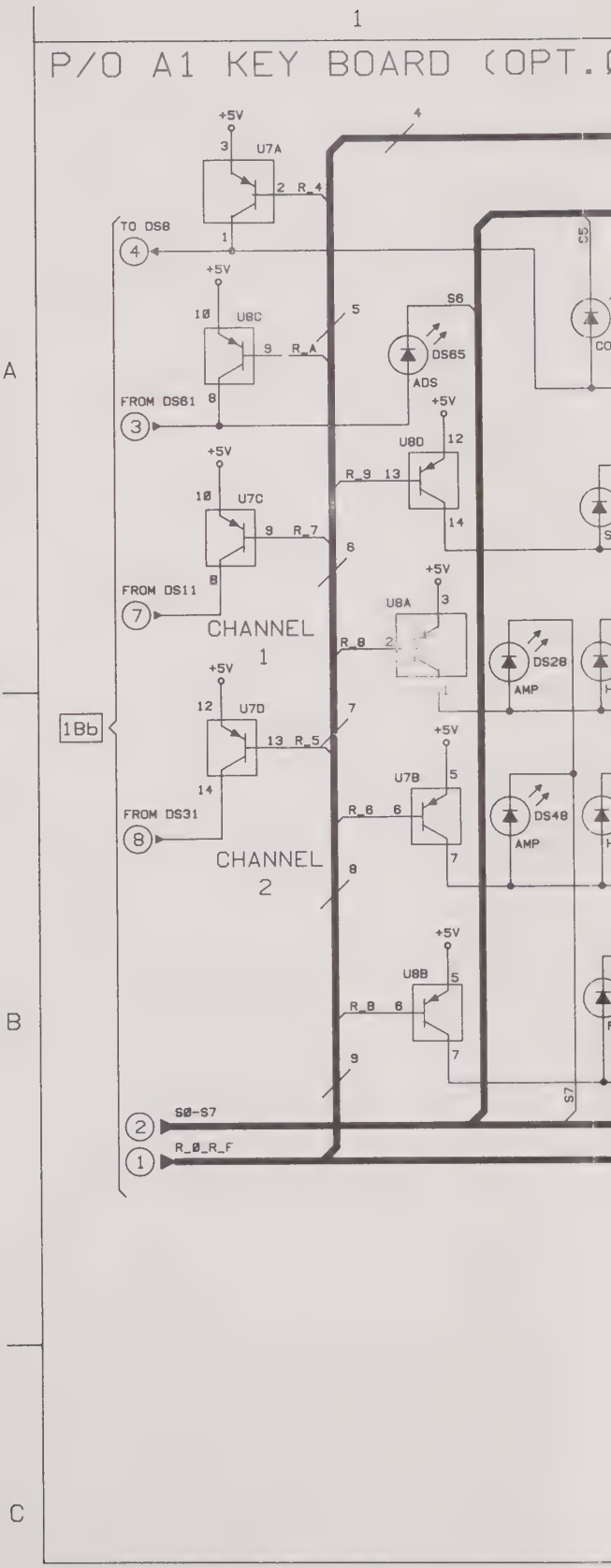
1
P/O A1 KEY BOARD (OPT.
A
B
C
+5V
U7A
TO DS8
U8C
S6
DS65
ADS
FROM DS61
U8D
U7C
FROM DS11
CHANNEL 1
U8A
DS28
AMP
1Bb
U7D
FROM DS31
U7B
DS48
CHANNEL 2
U8B
S0-S7
R_0_R_F

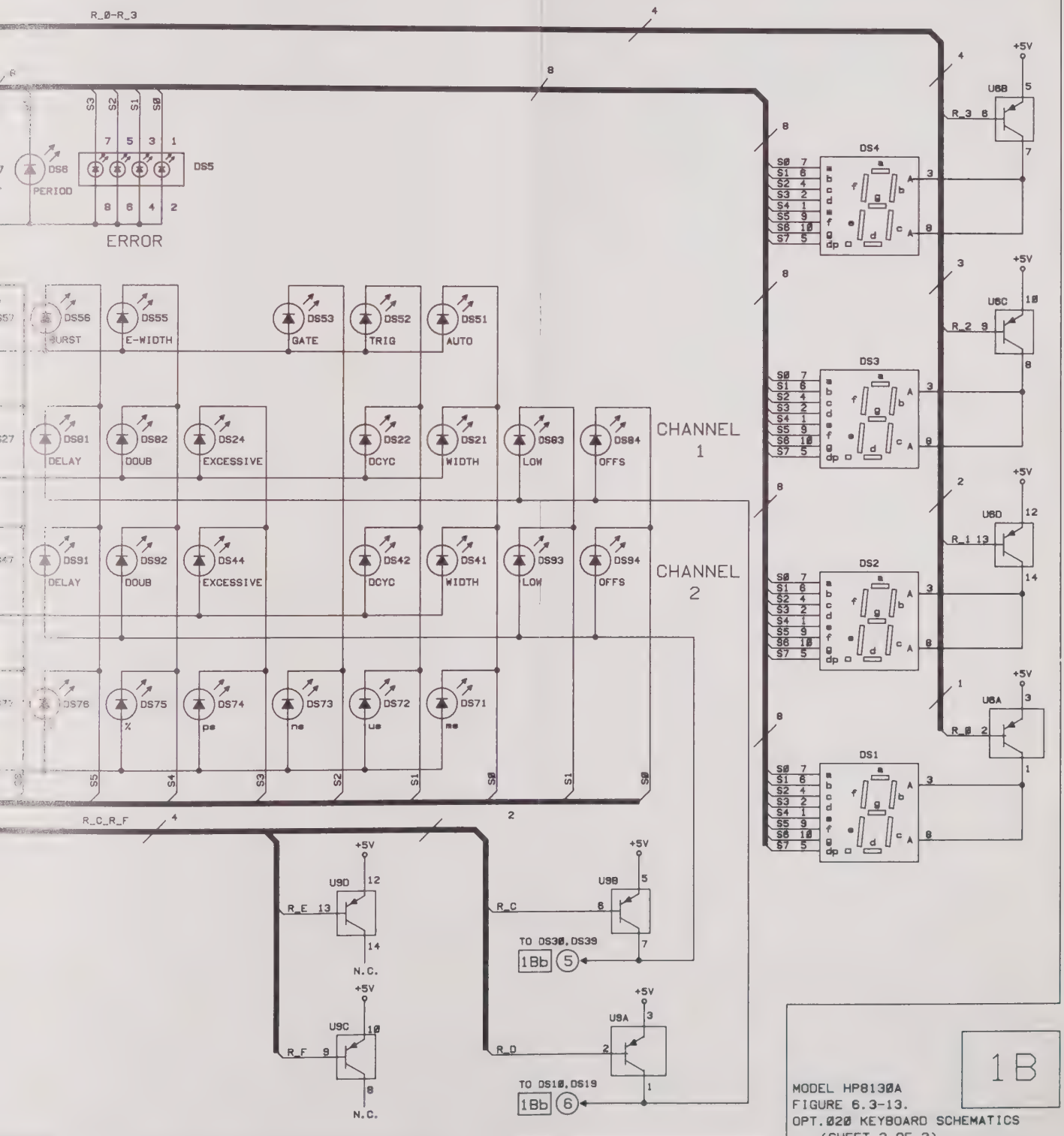

1B

MODEL HP8130A
FIGURE 6.3-13.
OPT.020 KEYBOARD SCHEMATICS
(SHEET 2 OF 2)

CPU BOARD (A3)

A1 BD AY KEY

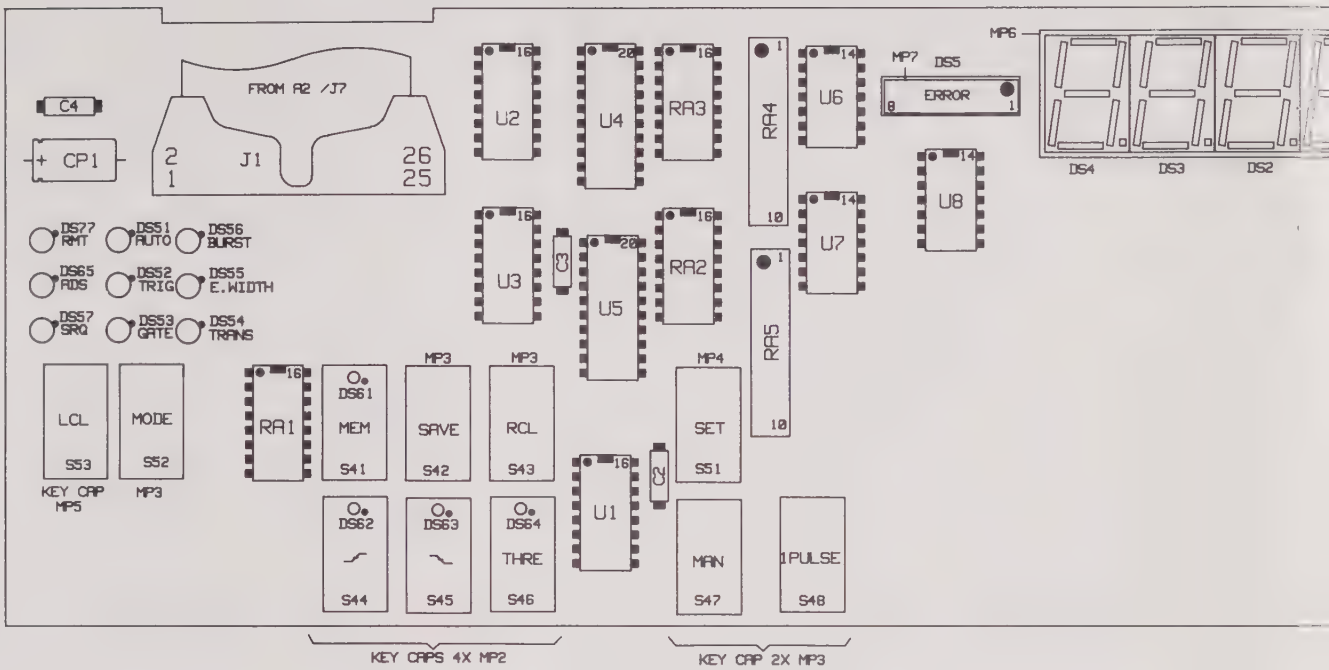

A1 BD AY KEY OPT.020

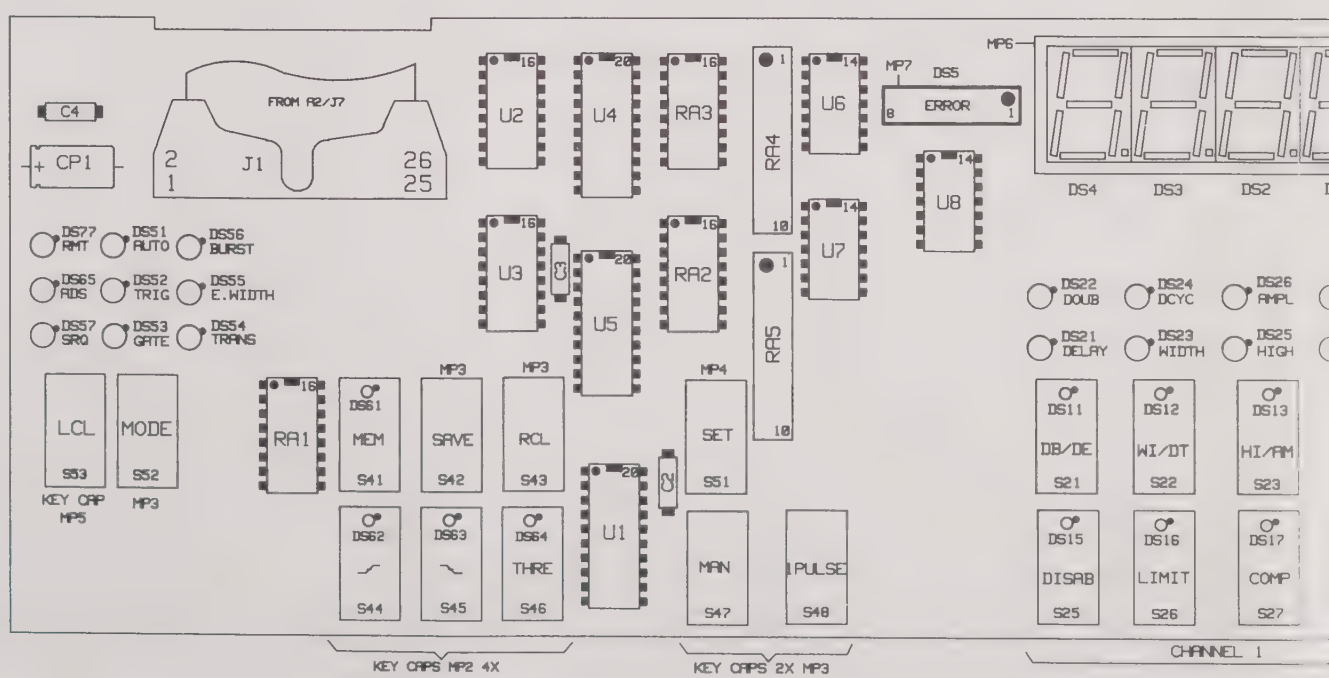

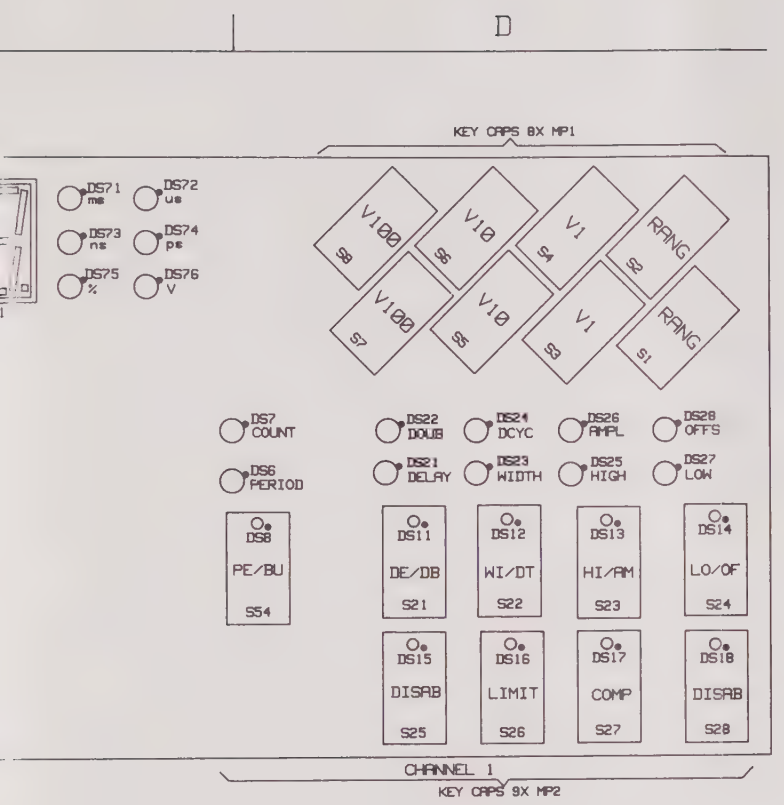

REF. DES.	GRID LOC.	REF. DES.	GRID LOC.	REF. DES.	GRID LOC.
CP1	A1	DS61	A2	S24	D2
C2	B2	DS62	A2	S25	D2
C3	B2	DS63	A2	S26	D2
C4	A1	DS64	B2	S27	D2
		DS65	A1	S28	D2
DS1	C1				
DS2	C1	DS71	C1	S41	A2
DS3	C1	DS72	C1	S42	A2
DS4	C1	DS73	C1	S43	B2
DS5	B1	DS74	C1	S44	A2
		DS75	C1	S45	A2
DS6	D1	DS76	C1		
DS7	D1	DS77	A1	S46	B2
DS8	D2			S47	B2
DS11	D1	J1	A1	S48	B2
DS12	D1			S51	B2
		MP1	D1	S52	A2
DS13	D1	MP2	A-D2		
DS14	D1	MP3	A-B2	S53	A2
DS15	D2	MP4	B1	S54	D2
DS16	D2	MP5	B1		
DS17	D2	MP6	B1	U1	B2
		MP7	B1	U2	B1
DS18	D2			U3	B1
DS21	D1	RA1	A2	U4	B1
DS22	D1	RA2	B1	U5	B1
DS23	D1	RA3	B1		
DS24	D1	RA4	B1	U6	B1
		RA5	B1	U7	B1
DS25	D1			U8	B1
DS26	D1	S1	D1		
DS27	D1	S2	D1		
DS28	D1	S3	D1		
DS51	A1	S4	D1		
		S5	D1		
DS52	A1				
DS53	A1	S6	D1		
DS54	A1	S7	D1		
DS55	A1	S8	D1		
DS56	A1	S21	D2		
DS57	A1	S22	D2		
		S23	D2		

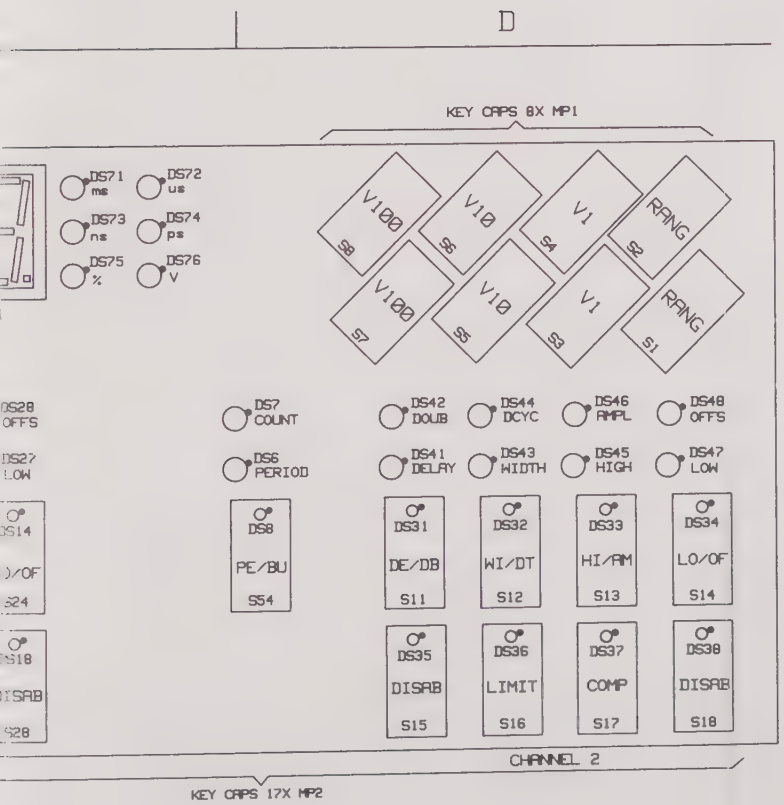

REF. DES.	GRID LOC.	REF. DES.	GRID LOC.	REF. DES.	GRID LOC.	REF. DES.	GRID LOC.
CP1	A1	DS41	D1	RA1	A2	S48	B2
C2	B2	DS42	D1	RA2	B1	S51	B2
C3	B2	DS43	D1	RA3	B1	S52	A2
C4	A1	DS44	D1	RA4	B1	S53	A2
		DS45	D2	RA5	B1	S54	D2
DS1	C1						
DS2	C1	DS46	D2	S1	D1	U1	B2
DS3	C1	DS47	D2	S2	D1	U2	B1
DS4	C1	DS48	D2	S3	D1	U3	B1
DS5	B1	DS51	A1	S4	D1	U4	B1
		DS52	A1	S5	D1	U5	B1
DS6	D1						
DS7	D1	DS53	A1	S6	D1	U6	B1
DS8	D2	DS54	A1	S7	D1	U7	B1
DS11	C2	DS55	A1	S8	D1	U8	B1
DS12	C2	DS56	A1	S11	D2		
		DS57	A1	S12	D2		
DS13	C2						
DS14	C2	DS61	A2	S13	D2		
DS15	C2	DS62	A2	S14	D2		
DS16	C2	DS63	A2	S15	D2		
DS17	C2	DS64	B2	S16	D2		
		DS65	A1	S17	D2		
DS18	C2						
DS21	C1	DS71	C1	S18	D2		
DS22	C1	DS72	C1	S21	C2		
DS23	C1	DS73	C1	S22	C2		
DS24	C1	DS74	C1	S23	C2		
		DS75	C1	S24	C2		
DS25	C1						
DS26	C1	DS76	C1	S25	C2		
DS27	C1	DS77	A1	S26	C2		
DS28	C1			S27	C2		
DS31	D2	J1	A1	S28	C2		
				S41	A2		
DS32	D2	MP1	D1				
DS33	D2	MP2	A-D2	S42	A2		
DS34	D2	MP3	A-B2	S43	B2		
DS35	D2	MP4	B1	S44	A2		
DS36	D2	MP5	B1	S45	A2		
DS37	D2	MP6	B1	S46	B2		
DS38	D2	MP7	B1	S47	B2		

MODEL HP8131A FIGURE 6.3-14.
KEYBOARD COMPONENT LAYOUT
(STANDART AND OPT.020) CPU BD (A3)

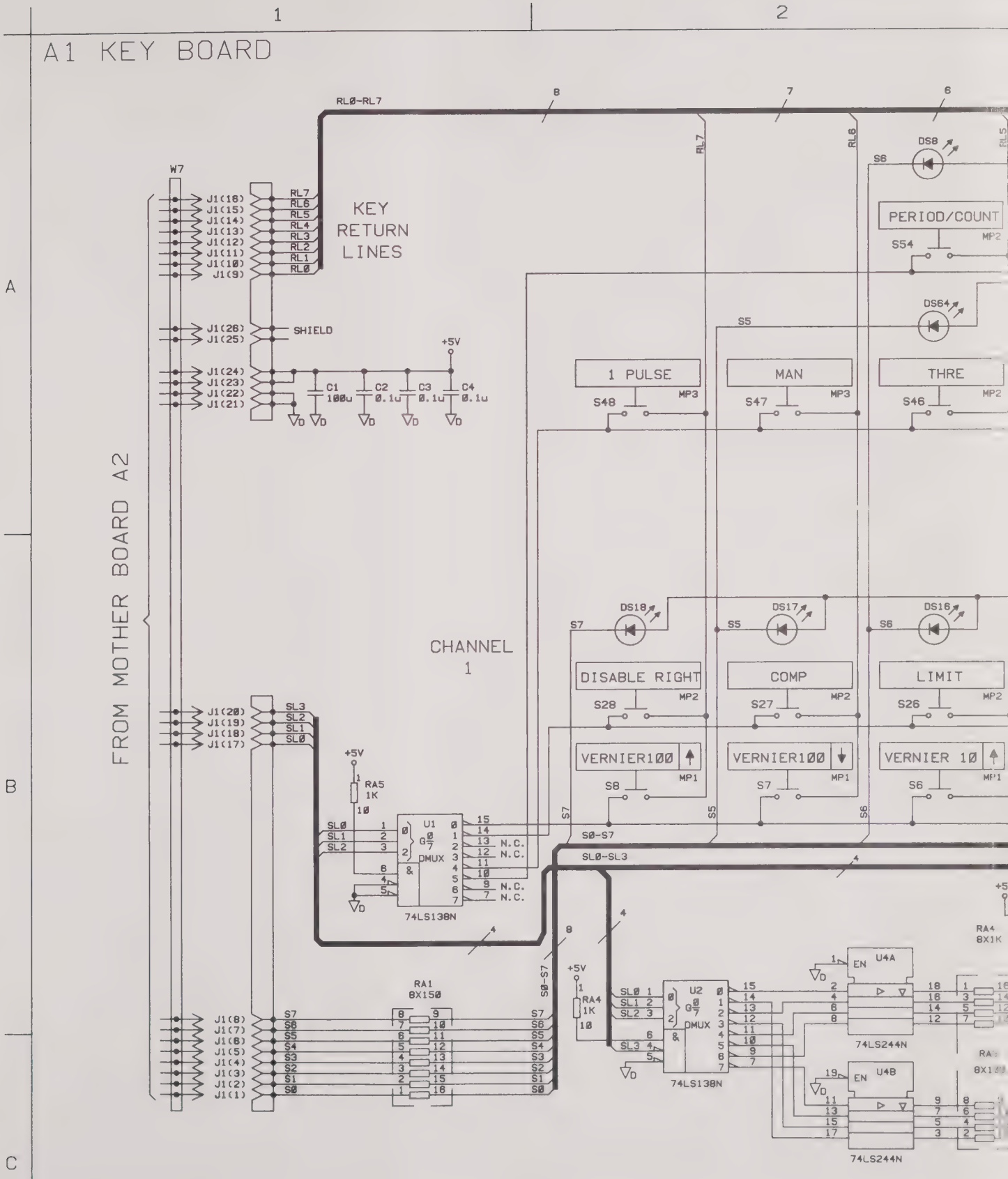
A1 KEY BOARD
1
2
A
B
C
RL0-RL7
KEY RETURN LINES
W7
J1(18)
J1(15)
J1(14)
J1(13)
J1(12)
J1(11)
J1(10)
J1(9)
RL7
RL6
RL5
RL4
RL3
RL2
RL1
RL0
J1(26)
J1(25)
SHIELD
J1(24)
J1(23)
J1(22)
J1(21)
+5V
C1 100u
C2 0.1u
C3 0.1u
C4 0.1u
FROM MOTHER BOARD A2
CHANNEL 1
DS8
S6
PERIOD/COUNT
MP2
S54
DS64
S5
1 PULSE
MP3
S48
MAN
MP3
S47
THRE
MP2
S46
DS18
S7
DISABLE RIGHT
MP2
S28
DS17
S5
COMP
MP2
S27
DS16
S6
LIMIT
MP2
S26
VERNIER100
MP1
S8
VERNIER100
MP1
S7
VERNIER 10
MP1
S6
J1(20)
J1(19)
J1(18)
J1(17)
SL3
SL2
SL1
SL0
RA5
1K
10
U1
DMUX
74LS138N
N.C.
S0-S7
SL0-SL3
RA1
8X150
J1(8)
J1(7)
J1(6)
J1(5)
J1(4)
J1(3)
J1(2)
J1(1)
S7
S6
S5
S4
S3
S2
S1
S0
RA4
1K
U2
DMUX
74LS138N
EN
U4A
74LS244N
U4B
74LS244N
RA4
8X1K

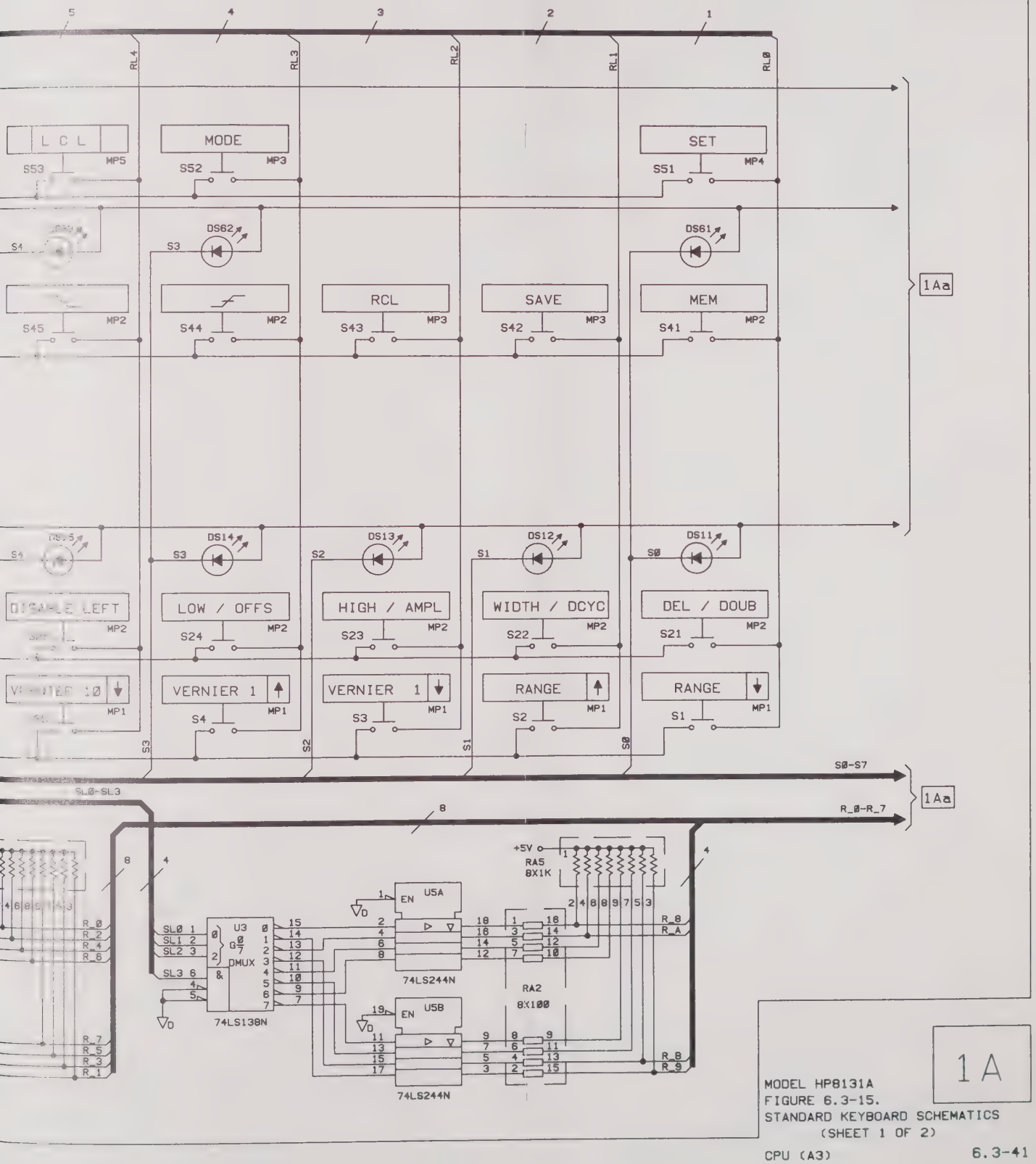

MODEL HP8131A
FIGURE 6.3-15.
STANDARD KEYBOARD SCHEMATICS
(SHEET 1 OF 2)

1A

CPU (A3)

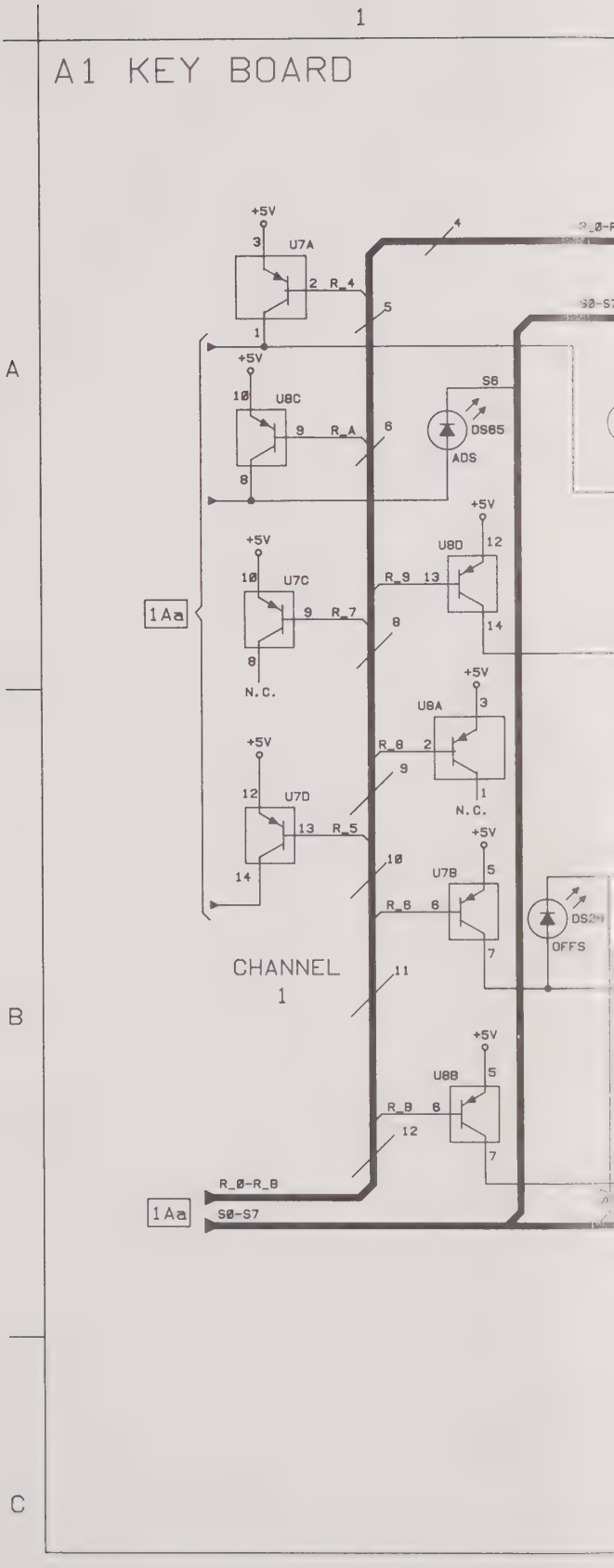
1
A1 KEY BOARD
A
B
C
+5V
U7A
R_4
U8C
R_A
S6
DS65
ADS
U7C
R_7
N.C.
U8D
R_9
U8A
R_8
U7D
R_5
U7B
R_6
DS29
OFFS
CHANNEL
1
U8B
R_B
R_0-R_B
S0-S7
1Aa

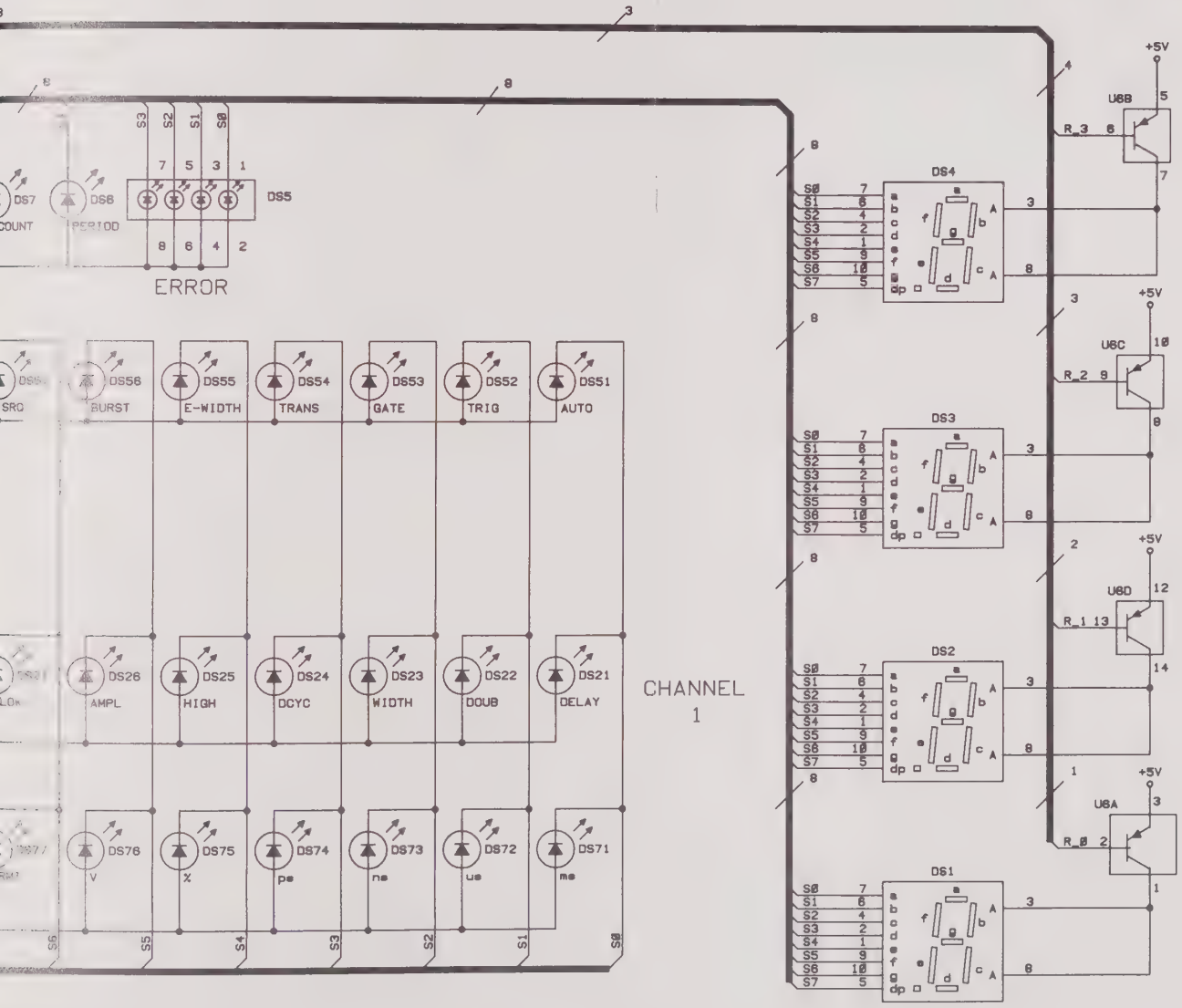
S3 S2 S1 S0
7 5 3 1
DS7 DS6 DS5
COUNT PERIOD
8 6 4 2
ERROR
DS56 DS55 DS54 DS53 DS52 DS51
BURST E-WIDTH TRANS GATE TRIG AUTO
DS26 DS25 DS24 DS23 DS22 DS21
AMPL HIGH DCYC WIDTH DOUB DELAY
DS76 DS75 DS74 DS73 DS72 DS71
V x ps ns us ms
CHANNEL 1
DS4 DS3 DS2 DS1
+5V
U6B U6C U6D U6A
R_3 R_2 R_1 R_0

A1 KEY BOARD (OPT.Ø2Ø)

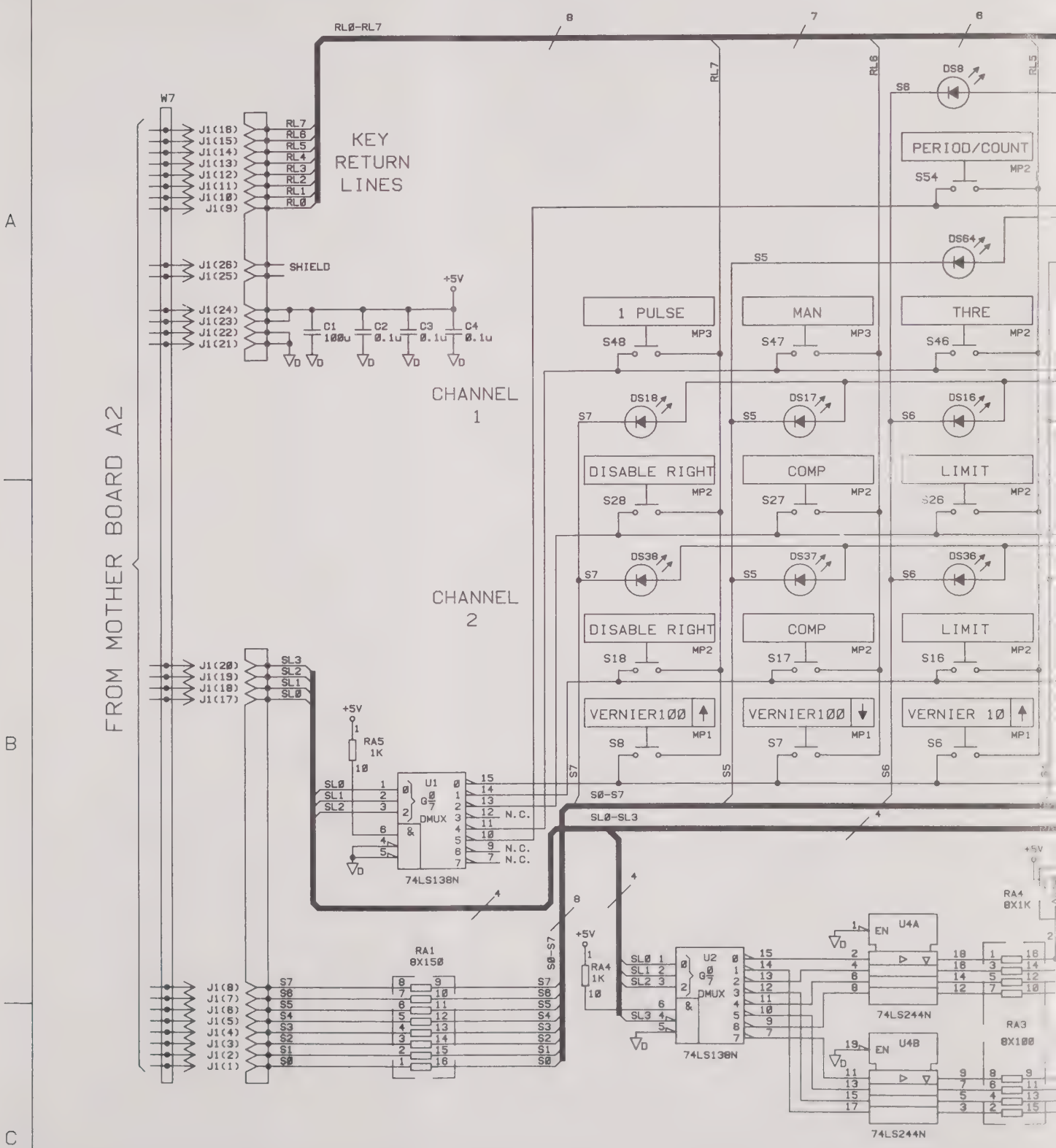

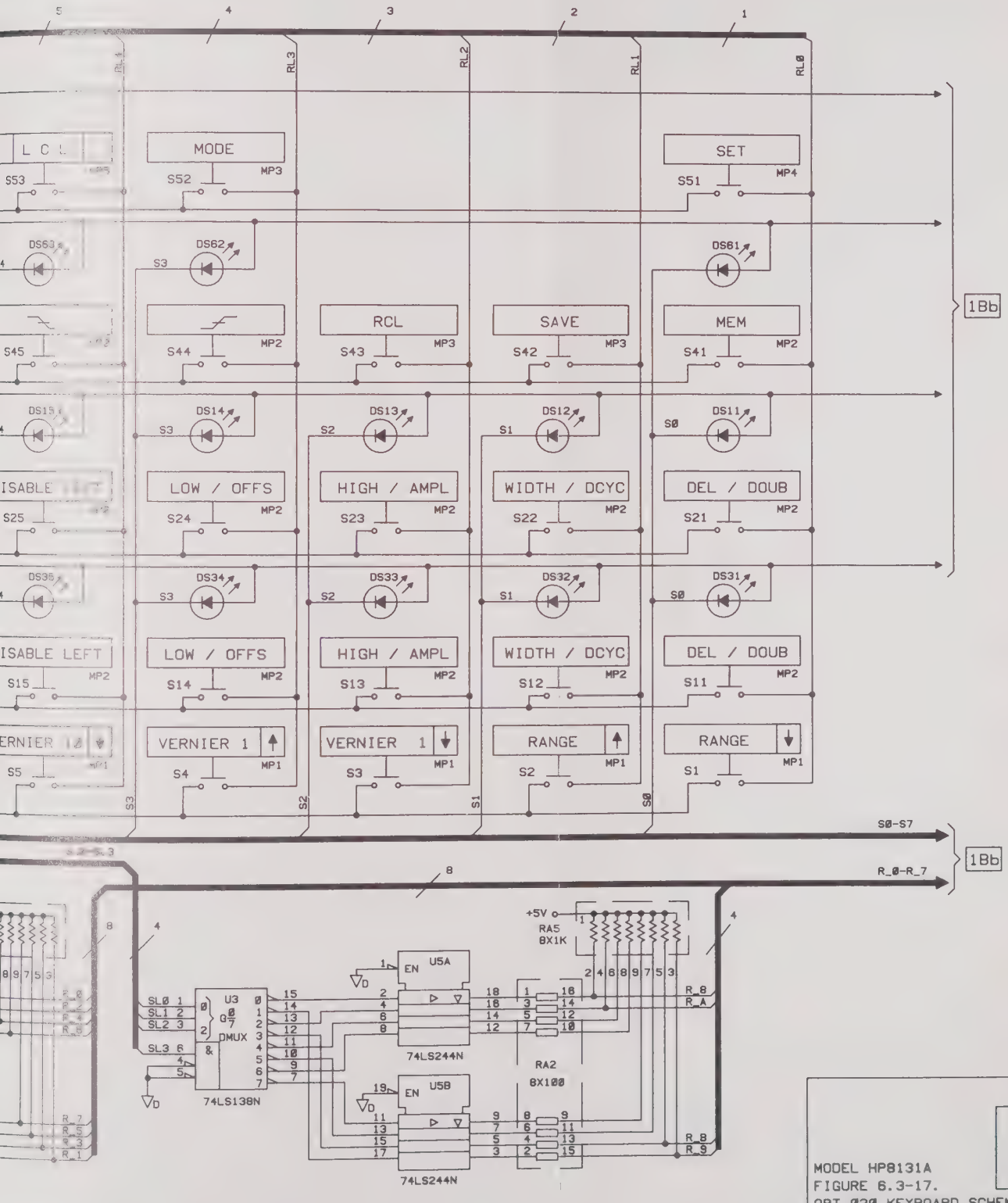

1B

MODEL HP8131A
FIGURE 6.3-17.
OPT.020 KEYBOARD SCHEMATICS
(SHEET 1 OF 2)

CPU (A3)

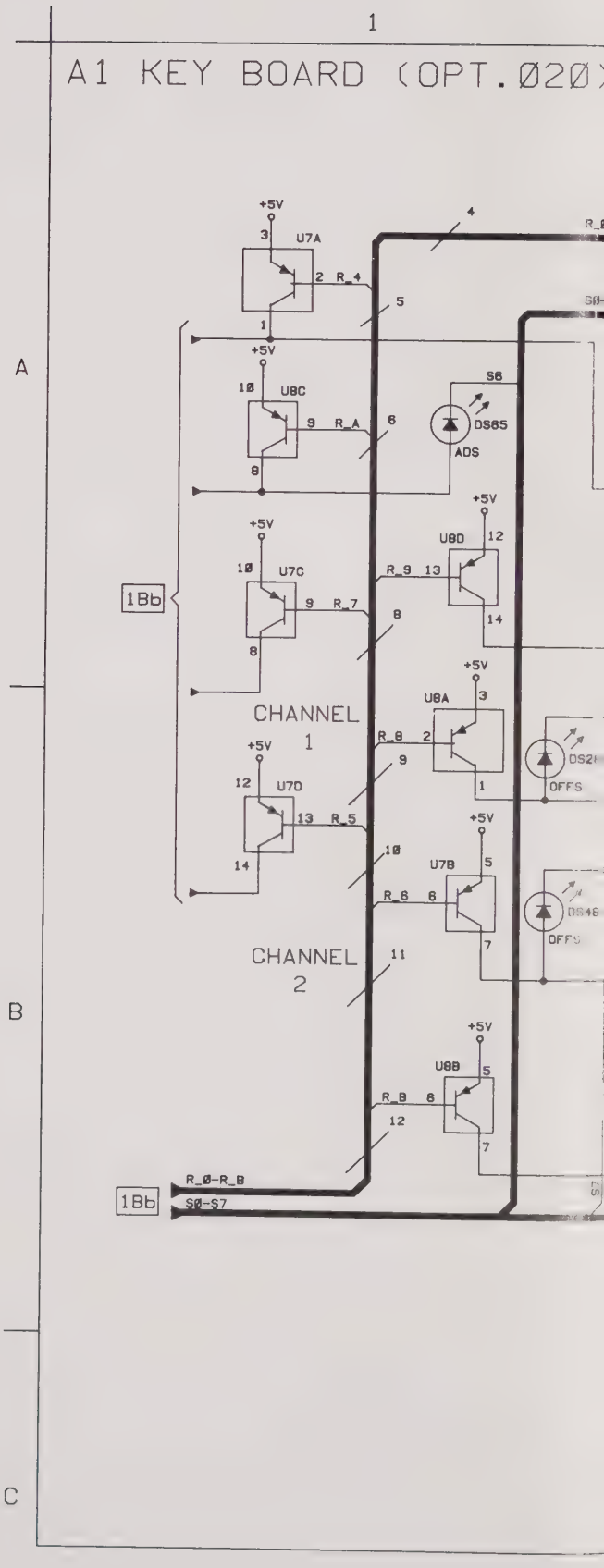
1
A1 KEY BOARD (OPT.020)
A
B
C
+5V
U7A
U8C
U7C
U8D
U8A
U7D
U7B
U8B
R_4
R_A
R_7
R_9
R_8
R_5
R_6
R_B
S6
DS85
ADS
CHANNEL 1
CHANNEL 2
OFFS
1Bb
R_Ø-R_B
SØ-S7

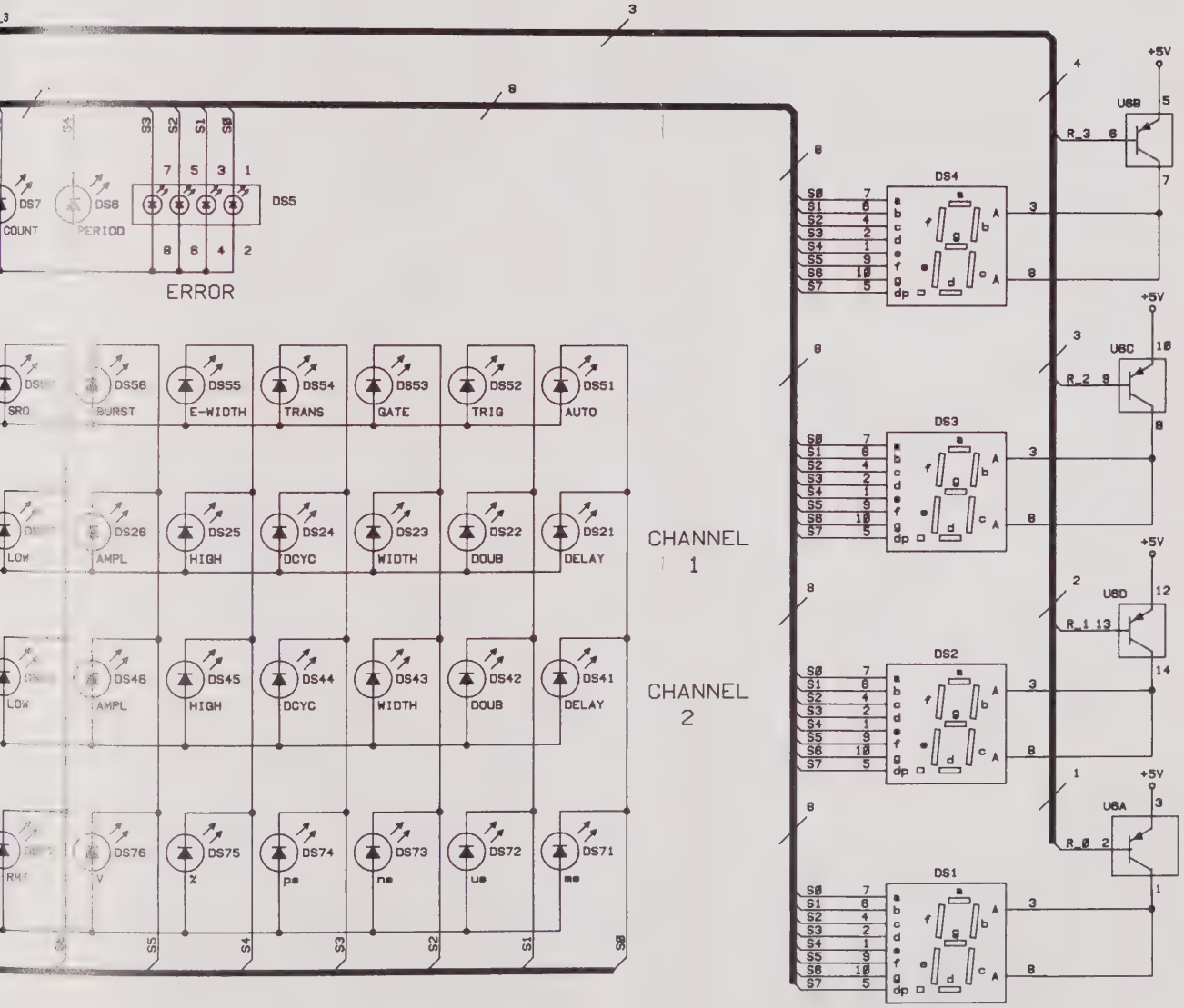

MODEL HP8131A
FIGURE 6.3-18.
OPT.020 KEYBOARD SCHEMATICS
(SHEET 2 OF 2)

1B

6-4

Timing Board (A5)

Introduction

The complete timing generation for both the HP 8130A/HP 8131A 500 MHz channels is realized on one board.

Note

The HP 8130A is a 300 MHz pulse generator, however, it uses the same 500 MHz channels as the HP 8131A.

The board consists of five main parts:

- three timing blocks to generate period, delay and width
- trigger input stage
- adjust memory.

The delay and width generators are duplicated in the optional second channel (option 020).

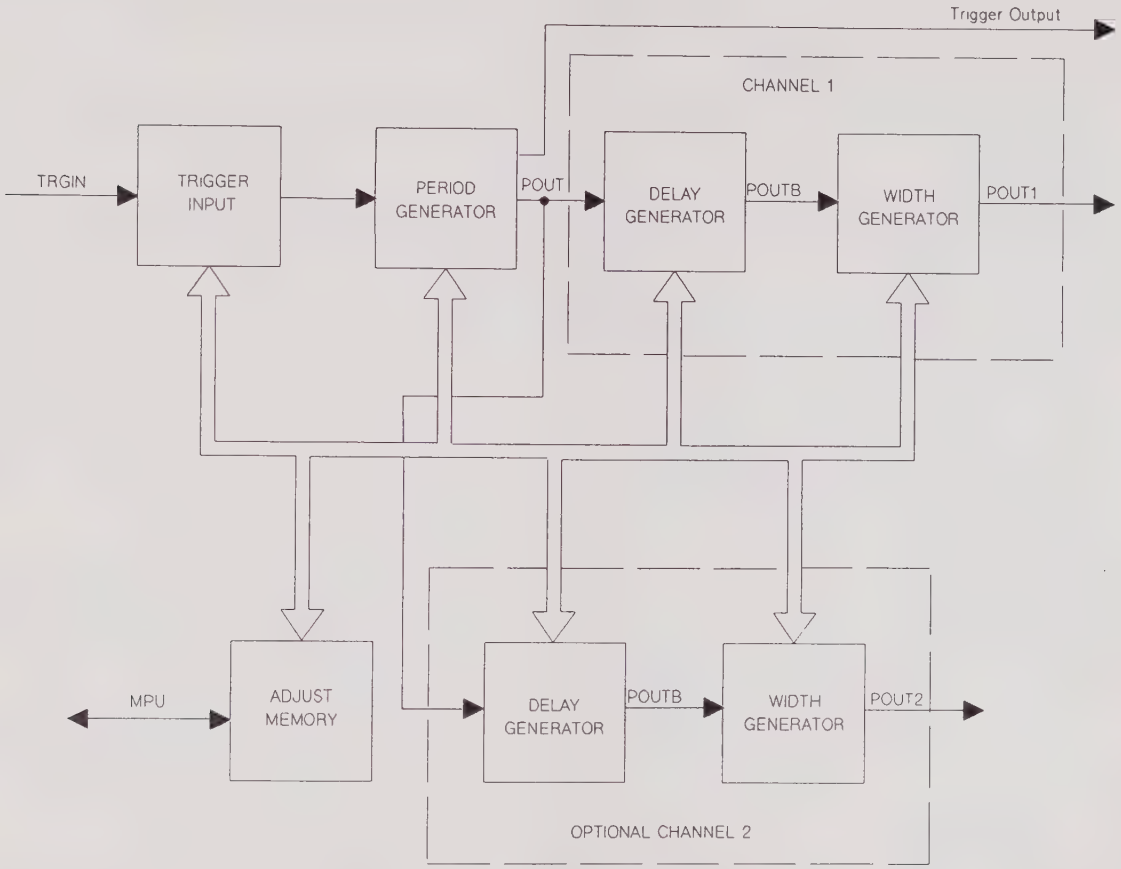

Figure 6-4-1. Module Block Diagram

Trigger Input

The external signal, with a frequency up to 300 MHz for the HP 8130A and 500 MHz for the HP 8131A, is transformed to an internal signal with an EECL format.

Timing Blocks

The three timing blocks (period, delay, and width) function in a similar manner, their main components being a 500 MHz triggerable oscillator and a 200 MHz counter. This enables a frequency range from 500 MHz down to 10 Hz to be covered. The delay and width timing blocks are duplicated in the optional channel 2.

Adjust Memory

The adjust information (found during a special test during production) is stored in an EEPROM within this block. The MPU uses this EEPROM data every time the timing parameter changes.

Trigger Input

The trigger input stage transforms an external trigger signal with a frequency up to 300 MHz for the HP 8130A and 500 MHz for the HP 8131A to an internal trigger signal. The external levels can be in the range of ±5 V with a peak-to-peak voltage down to 300 mV, the internal levels are EECL format.

The heart of the trigger input is a bipolar 500 MHz comparator mounted on a hybrid that can be internally inverted and disabled. To operate the comparator in its specified range, the input signal, TRGIN, is attenuated by 20 dB. The trigger threshold is generated by an 8-bit DAC.

Timing Block

The timing block is the main part of the timing board. There are three timing blocks in the 1-channel version and five in the 2-channel version. They operate in a similar manner to generate period, delay, and width.

A timing block consists of:

- a 500 MHz bipolar timing generator (TIGER)
- a 200 MHz bipolar counter
- five current sources and one voltage source that are partially controlled by a DAC
- a digital interface for mode control
- a 10 MHz TTL-burst-counter for the period generator.

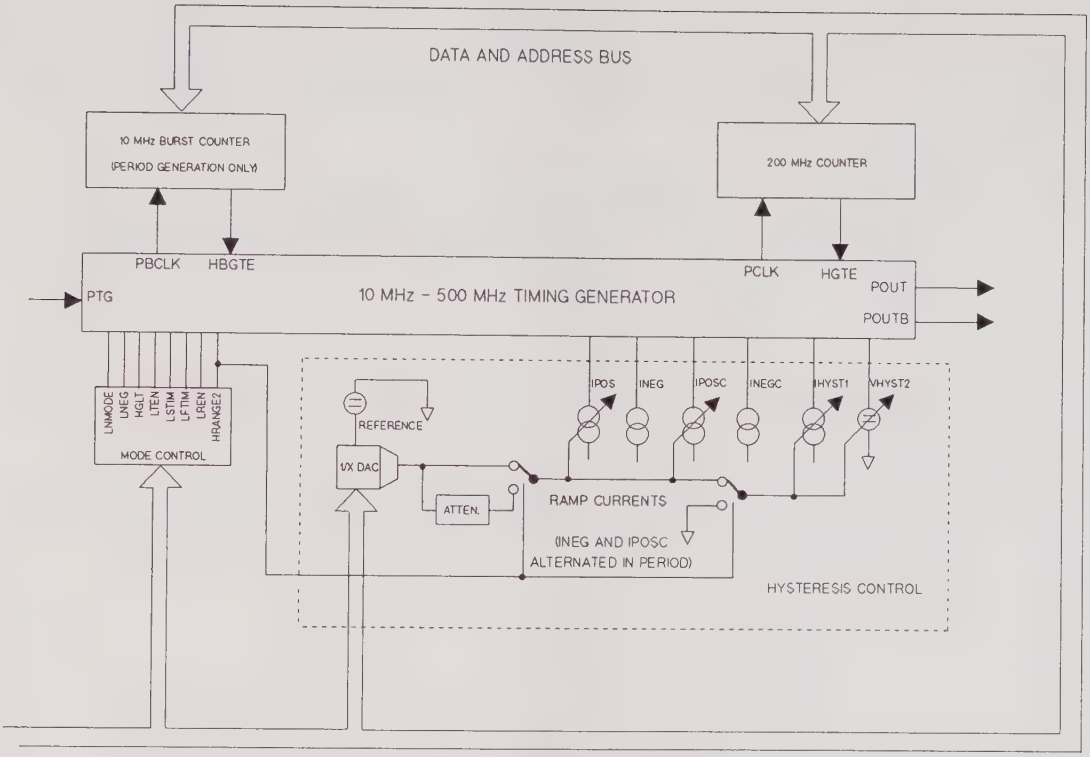

Figure 6-4-2. Timing Block Diagram

Bipolar Timing Generator

The TIGER-IC is a synchronously gateable and triggerable oscillator with a maximum frequency of 500 MHz or a minimum pulse width of 1 ns. It has a large analog timing range divided into two parts. The first part has a pulse width range from 1 ns to 10 ns, the second from 10 ns to 100 ns (or a 500 MHz to 100 MHz and 100 MHz to 10 MHz repetition rate). This analog timing range can be expanded by using an external decade counter.

Mode Control

The operation mode of the TIGER is controlled by the digital mode control. Each TIGER can operate in one of the following modes:

- a gateable oscillator
- a monostable that can be triggered on the rising edge or, the rising and falling edges
- a transparent IC (output signal = input signal).

There are some additional signals to enable the timing circuit and, to select either the first or second timing range.

Current Sources, Voltage Source and Hysteresis Control

The analog timing of the TIGER is controlled by five current sources and one voltage source, partially controlled by a DAC.

The current sources Ipos and Ineg supply the ramp oscillator load capacitor and hence define the charge and discharge cycles.

Iposc and Inegc are complements of Ipos and Ineg and are used for internal offset biasing.

Ihyst1 and Vhyst2 are used to adjust the ramp oscillator internal hysteresis and thus to compensate for high frequency effects.

Ipos, Iposc and the hysteresis control are varied by a 12-bit DAC used in the 1/x-mode. To enable both timing ranges to be covered by the same DAC and sources, the DAC can be switched to operate via an attenuator in the second timing range. The result is to set the current sources in a different manner; the hysteresis control is fixed.

Decade Counter

The decade counter is used to expand the analog timing range of the TIGER. It is a (14+2)-bit bipolar EECL counter that is able to operate in a frequency range up to 200 MHz and to count up to 3 276 801. When operating in the second timing range (10 ns to 100 ns) the counter, together with the TIGER, can expand the pulse width up to 100 ms (repetition rate of 10 Hz).

Period Generation

During period generation the fast counter operates in the burst mode to count the required number of bursts in the period range 5 ns to 99.9 ns. To provide a burst mode in slower ranges, where this counter is used to expand the period, an additional burst counter is realized using discrete TTL components.

Operation Modes

The following sections describe the seven operation modes available with the HP 8130A and the eight modes with the HP 8131A. The information given, also applies to the optional second channel.

AUTO - Auto Mode

In this mode, the period, delay and width are generated internally and the trigger input disabled. The period generator operates as a free running oscillator and the delay and width generators as monostables. The delay generator is triggered by the rising edge of the period generator output signal (POUT). The delay generator produces a single negative pulse at its inverted output (POUTB); the (negative) pulse width corresponds to the expected delay. The width generator is triggered by the rising edge of the delay generator output (POUTB). The width generator produces an output pulse (POUT1) with the required width.

TRIG - Triggered Mode

In TRIG mode the trigger input is enabled with all its functions. The period generator is in transparent mode and the delay and width generators are used as monostables. The delay and width generators function in the same way as in the AUTO mode. Triggering at the trigger input can be on the rising or falling edge.

GATE - Gate Mode

The internal configuration of the GATE mode is the same as for the AUTO mode, except the trigger input is enabled. Period, delay, and width are generated internally, in addition the period generator can be started or stopped by an external signal. The start of the period generator is synchronized to the external signal and is halted after the last period cycle has completed. The gate function at the trigger input can be selected either for positive or negative gate.

BURST - Burst Mode

In the BURST mode the period generator is configured as in the GATE mode, but the gate signal is internally generated by a burst counter. A trigger pulse at the period generator causes it to oscillate and a counter counts from the given number of burst pulses down to zero and then stops the period generator. If the period is lower than 100 ns, the fast counter is used to count the pulses otherwise the TTL counter is used. The delay and width generators again operate as monostables. The BURST function can be chosen, at the trigger input, to start on the rising or falling edge.

E. WIDTH - External Width Mode

In this mode the input signal TRGIN is transmitted to the output POUT1, thus all the generators (period, delay, and width) are in the transparent mode. In order to produce the correct signal at the HP 8130A/HP 8131A output, the input signal is first inverted at the trigger input stage and then again on the output board. The E. WIDTH mode can be selected, at the trigger input, to operate normally or inversely.

TRANS - Transducer Mode (HP 8131A only)

This mode does not involve the timing board; thus all generators and the trigger input are disabled.

DCYC - Duty Cycle Mode

This mode can be selected in addition to the AUTO, GATE, and BURST modes. During this mode the firmware calculates and programs the width, corresponding to the given period, with respect to the desired duty cycle.

DOUB - Double Pulse Mode

This mode can be selected in addition to AUTO, TRIG, GATE, and BURST modes. In this mode two pulses are generated for one trigger event or during one period. Both delay and width generators are in the monostable mode, but the width generator is now triggered on both the rising and falling edges of its input signal. Therefore, the pulse width of the delay generator defines the distance between the two output pulses. The (normal) delay function is not available in this mode.

This page left intentionally blank

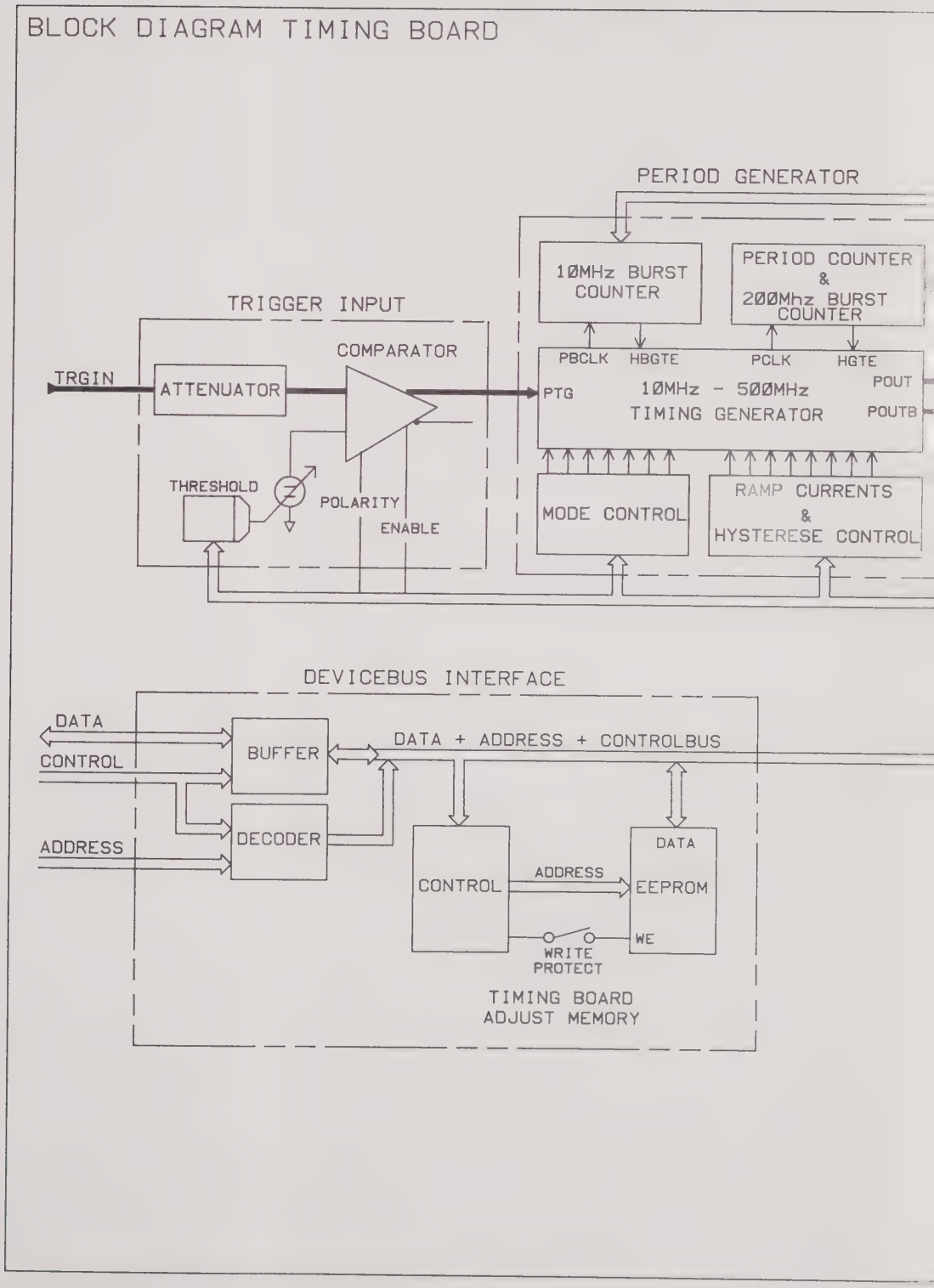
BLOCK DIAGRAM TIMING BOARD
PERIOD GENERATOR
10MHz BURST COUNTER
PERIOD COUNTER & 200Mhz BURST COUNTER
TRIGGER INPUT
COMPARATOR
TRGIN
ATTENUATOR
PBCLK
HBGTE
PCLK
HGTE
PTG
10MHz - 500MHz TIMING GENERATOR
POUT
POUTB
THRESHOLD
POLARITY
ENABLE
MODE CONTROL
RAMP CURRENTS & HYSTERESE CONTROL
DEVICEBUS INTERFACE
DATA
CONTROL
ADDRESS
BUFFER
DECODER
DATA + ADDRESS + CONTROLBUS
CONTROL
ADDRESS
DATA
EEPROM
WE
WRITE PROTECT
TIMING BOARD ADJUST MEMORY

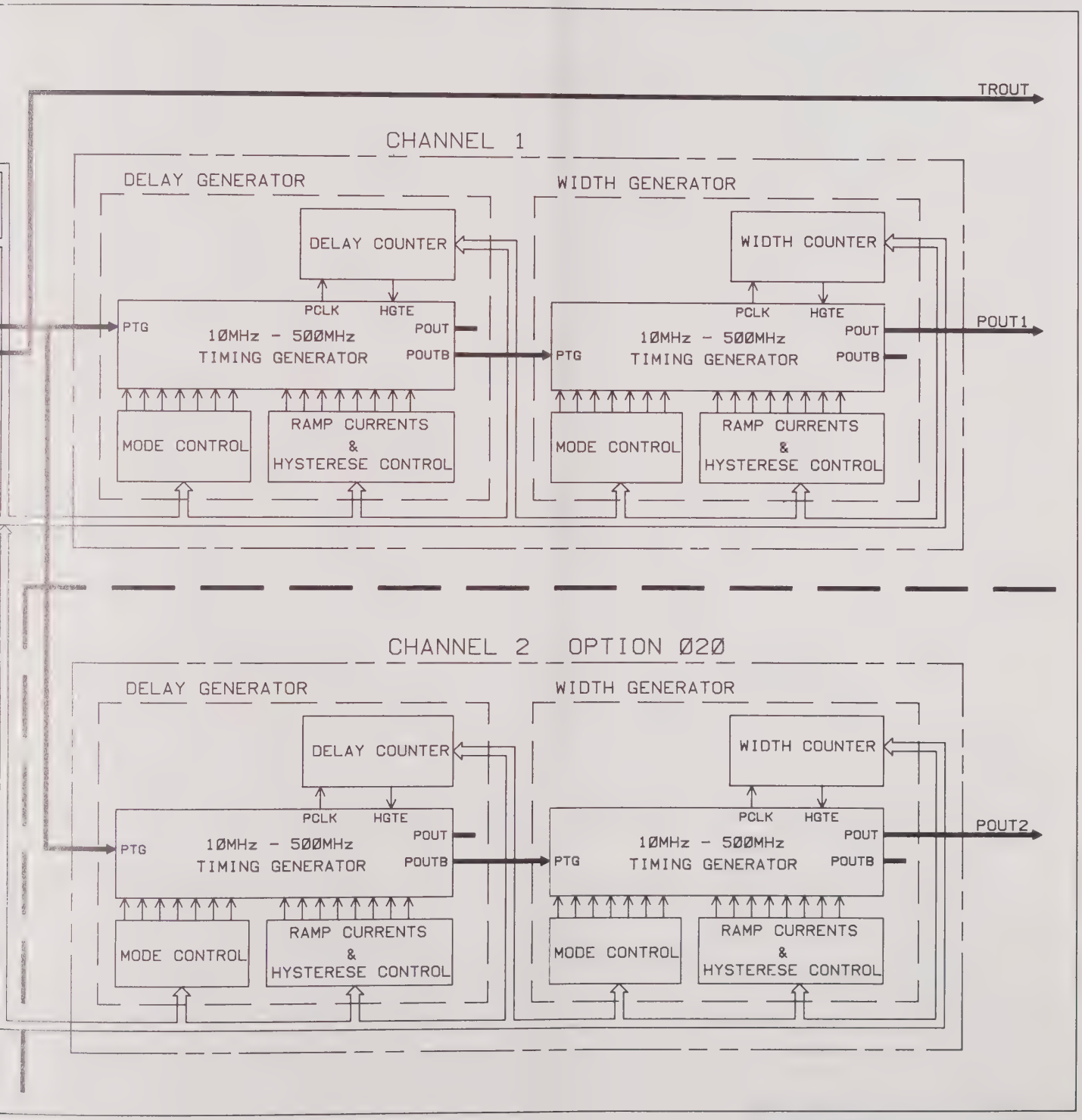

MODEL HP8130A/31A FIGURE 6.4-3.
TIMING BOARD BLOCK DIAGRAM

A5 BD AY TIMING

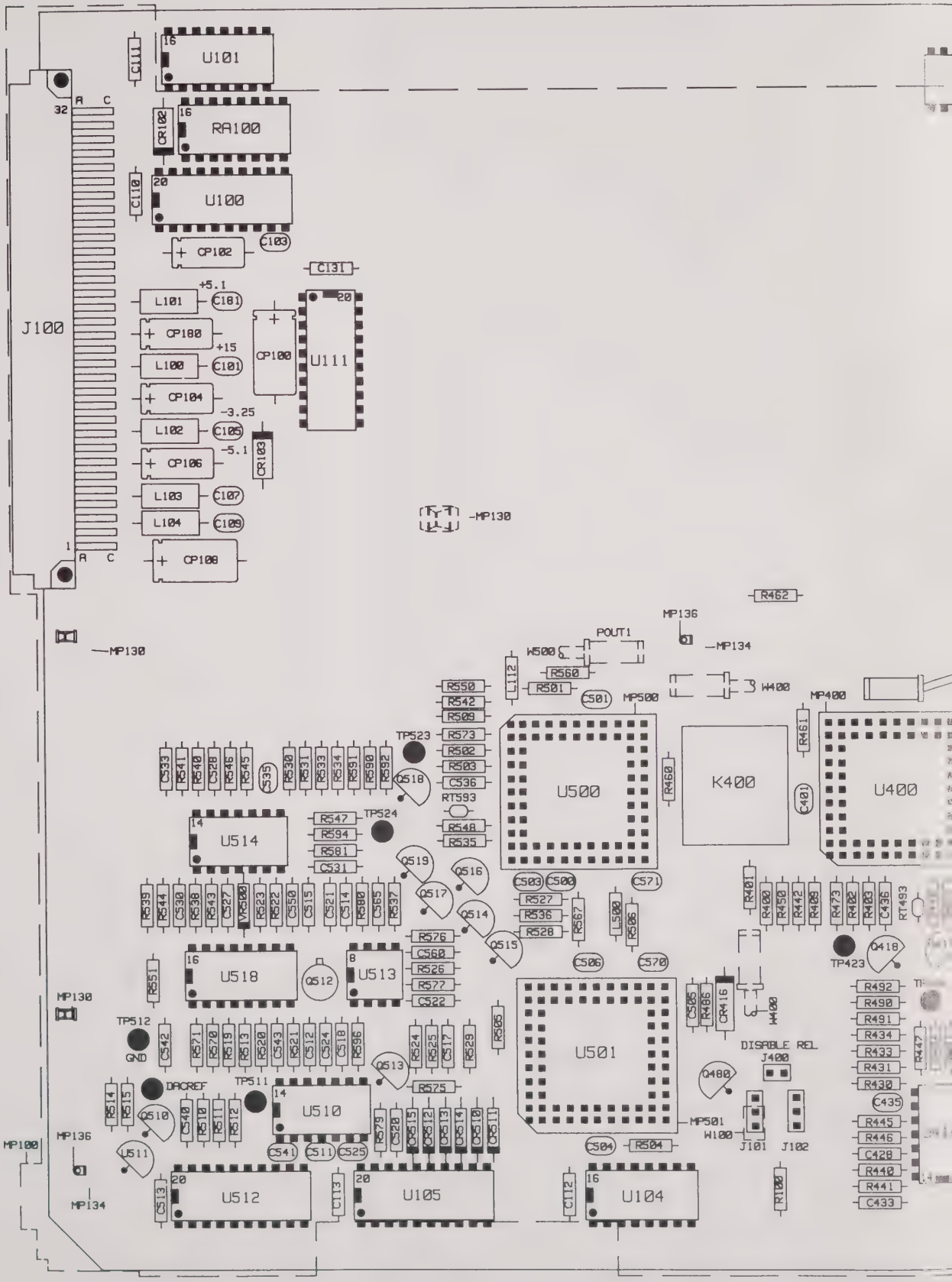

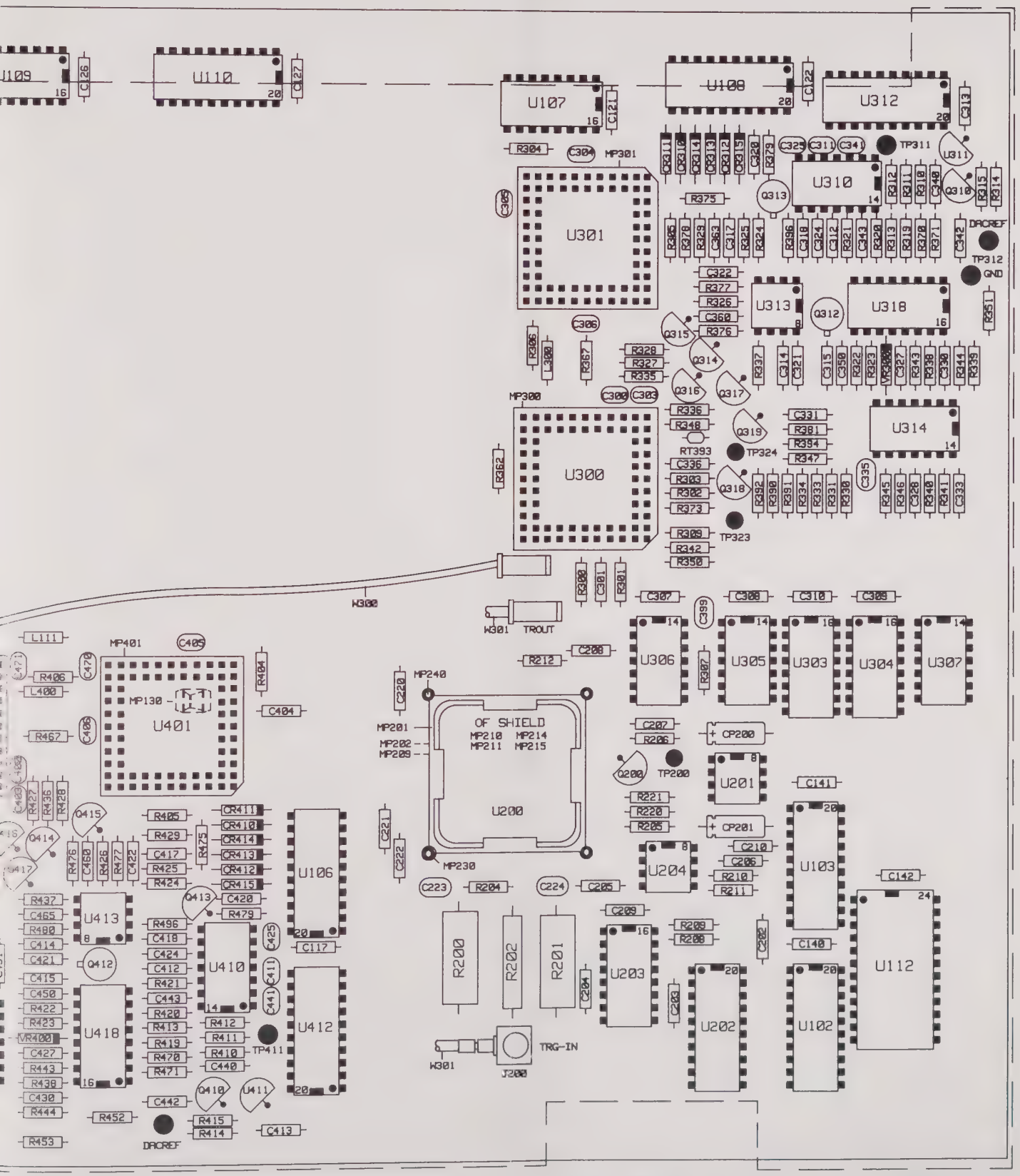

MODEL HP8130A
STANDARD TIMING BOARD
COMPONENT LAYOUT

FIGURE 6.4-4.

REF. DES.	GRID LOC.	REF. DES.	GR LO
C101	A1	C324	D1
C103	A1	C325	D1
C105	A1	C327	D1
C107	A2	C328	D2
C109	A2	C330	D1
C110	A1	C331	D1
C111	A1	C333	D2
C112	B3	C335	D2
C113	A3	C336	D2
C117	C3	C340	D1
C121	C1	C341	D1
C122	D1	C342	D1
C126	B1	C343	D1
C127	C1	C350	D1
C131	A1	C360	D1
C140	D3	C363	D1
C141	D2	C399	D2
C142	D2	C400	B2
C181	A1	C401	B2
C202	D3	C403	B2
C203	D3	C404	C2
C204	C3	C405	C2
C205	C2	C406	B2
C206	D2	C411	C3
C207	D2	C412	C3
C208	C2	C413	C3
C209	C2	C414	B3
C210	D2	C415	B3
C220	C2	C417	C2
C221	C2	C418	C3
C222	C2	C420	C2
C223	C2	C421	B3
C224	C2	C422	C2
C300	C1	C424	C3
C301	C2	C425	C3
C303	C1	C427	B3
C304	C1	C428	B3
C305	C1	C430	B3
C306	C1	C431	B3
C307	D2	C433	B3
C308	D2	C435	B3
C309	D2	C436	B2
C310	D2	C440	C3
C311	D2	C441	C3
C312	D1	C442	C3
C313	D1	C443	C3
C314	D1	C450	B3
C315	D1	C460	B2
C317	D1	C465	B2
C318	D1	C470	B2
C320	D1	C471	B2
C321	D1	C500	B2
C322	D1	C501	B2

REF. DES.	GRID LOC.
C503	B2
C504	B3
C505	B2
C506	B2
C511	A3
C512	A3
C513	A3
C514	A2
C515	A2
C517	A3
C518	A3
C520	A3
C521	A2
C522	A2
C524	A3
C525	A3
C527	A2
C528	A2
C530	A2
C531	A2
C533	A2
C535	A2
C536	A2
C540	A3
C541	A3
C542	A3
C543	A3
C550	A2
C560	A2
C565	A2
C570	B2
C571	B2
CP100	A1
CP102	A1
CP104	A1
CP106	A2
CP108	A2
CP180	A1
CP200	D2
CP201	D2
CR102	A1
CR103	A1
CR310	D1
CR311	D1
CR312	D1
CR313	D1
CR314	D1
CR315	D1
CR410	C2
CR411	C2
CR412	C2
CR413	C2
CR414	C2
CR415	C2
CR416	B2
CR510	A3
CR511	A3
CR512	A3
CR513	A3
CR514	A3
CR515	A3
J100	A1
J101	B3
J102	B3
J200	C3
J400	B3
K400	B2
L100	A1
L101	A1
L102	A1
L103	A2
L104	A2
L110	C2
L111	B2
L112	B2
L300	C1
L400	B2
L500	B2
MP100	A3
MP130	A2
MP134	B2
MP136	B2
MP201	C2
MP202	C2
MP209	C2
MP210	C2
MP211	C2
MP214	C2
MP215	C2
MP230	C2
MP240	C2
MP300	C1
MP301	C1
MP400	B2
MP401	B2
MP500	B2
MP501	B3
Q200	C2
Q310	D1
Q312	D1
Q313	D1
Q314	D1
Q315	D1
Q316	D1
Q318	D2
Q319	D2
Q410	C3
Q412	B3
Q413	C2
Q414	B2
Q415	B2
Q416	B2
Q417	B2
Q418	B2
Q419	B2
Q480	B3
Q510	A3
Q512	A2
Q513	A3
Q514	A2
Q515	A2
Q516	A2
Q517	A2
Q518	A2
Q519	A2
R100	B3
R200	C3
R201	C3
R202	C3
R204	C2
R205	D2
R206	D2
R208	D3
R209	D3
R210	D2
R211	D2
R212	C2
R220	D2
R221	D2
R300	C2
R301	C2
R302	D2
R303	D2
R304	C1
R305	D1
R306	C1
R307	D2
R309	D2
R310	D1
R311	D1
R312	D1
R313	D1
R314	D1
R315	D1
R319	D1
R320	D1
R321	D1
R322	D1
R323	D1
R324	D1
R325	D1
R326	D1
R327	C1
R328	C1
R329	D1
R330	D2
R331	D2
R333	D2
R334	D2
R335	C1
R336	D1
R337	D1
R338	D1
R339	D1
R340	D2
R341	D2
R342	D2
R343	D1
R344	D1
R345	D2
R346	D2
R347	D2
R348	D2
R350	D2
R351	D1
R362	C2
R367	C1
R370	D1
R371	D1
R373	D2
R375	D1
R376	D1
R377	D1
R378	D1
R379	D1
R381	D2
R390	D2
R391	D2
R392	D2
R394	D2
R396	D1
R400	B2
R401	B2
R402	B2
R403	B2
R404	C2
R405	C2
R406	B2
R409	B2
R410	C3
R411	C3
R412	C3
R413	C3
R414	C3
R415	C3
R419	C3
R420	C3
R421	C3
R422	B3
R423	B3
R424	C2
R425	C2
R426	B2
R427	B2
R428	B2
R429	C2
R430	B3
R431	B3
R433	B3
R434	B3
R435	B2
R436	B2
R437	B2
R438	B3
R440	B3
R441	B3
R442	B2
R443	B3
R444	B3
R445	B3
R446	B3
R447	B3
R448	B2
R450	B2
R452	B3
R453	B3
R460	B2
R461	B2
R462	B2
R467	B2
R470	C3
R471	C3
R473	B2
R475	B2
R476	B2
R477	B2
R479	C2
R480	B3
R481	B3
R486	B2
R490	B2
R491	B3
R492	B2
R494	B3
R496	C2
R501	B2
R502	A2
R503	A2
R504	B3
R505	A3
R506	B2
R509	A2
R510	A3
R511	A3
R512	A3
R513	A3
R514	A3
R515	A3
R519	A3
R520	A3
R521	A3
R522	A2
R523	A2
R524	A3
R525	A3
R526	A2
R527	B2
R528	B2
R529	A3
R530	A2
R531	A2
R533	A2
R534	A2
R535	A2
R536	B2
R537	A2
R538	A2
R539	A2
R540	A2
R541	A2
R542	A2
R543	A2
R544	A2
R545	A2
R546	A2
R547	A2
R548	A2
R550	A2
R551	A2
R560	B2
R567	B2
R570	A3
R571	A3
R573	A2
R575	A3
R576	A2
R577	A2
R579	A3
R580	A2
R581	A2
R590	A2
R591	A2
R592	A2
R594	A2
R596	A3
RA100	A1
RT393	D2
RT493	B2
RT593	A2
RT693	B1
RT793	C2
TP200	D2
TP311	D1
TP312	D1
TP323	D2
TP324	D2
TP411	C3
TP423	B2
TP424	B2
TP511	A3
TP512	A3
TP523	A2
TP524	A2
U100	A1
U101	A1
U102	D3
U103	D2
U104	B3
U105	A3
U106	C2
U107	C1
U108	C1
U109	B1
U110	C1
U111	A1
U112	D3
U200	C2
U201	D2
U202	D3
U203	C3
U204	D2
U300	C2
U301	C1
U303	D2
U304	D2
U305	D2
U306	D2
U307	D2
U310	D1
U311	D1
U312	D1
U313	D1
U314	D2
U318	D1
U400	B2
U401	C2
U410	C3
U411	C3
U412	C3
U413	B2
U414	B3
U418	B3
U500	B2
U501	B3
U510	A3
U511	A3
U512	A3
U513	A2
U514	A2
U518	A2
VR300	D1
VR400	B3
VR500	A2
W100	B3
W300	C2
W301	C2
W400	B2
W500	B2

MODEL HP8130A
STANDARD TIMING BOARD
COMPONENT LOCATION CHART

FIGURE 6.4-5.

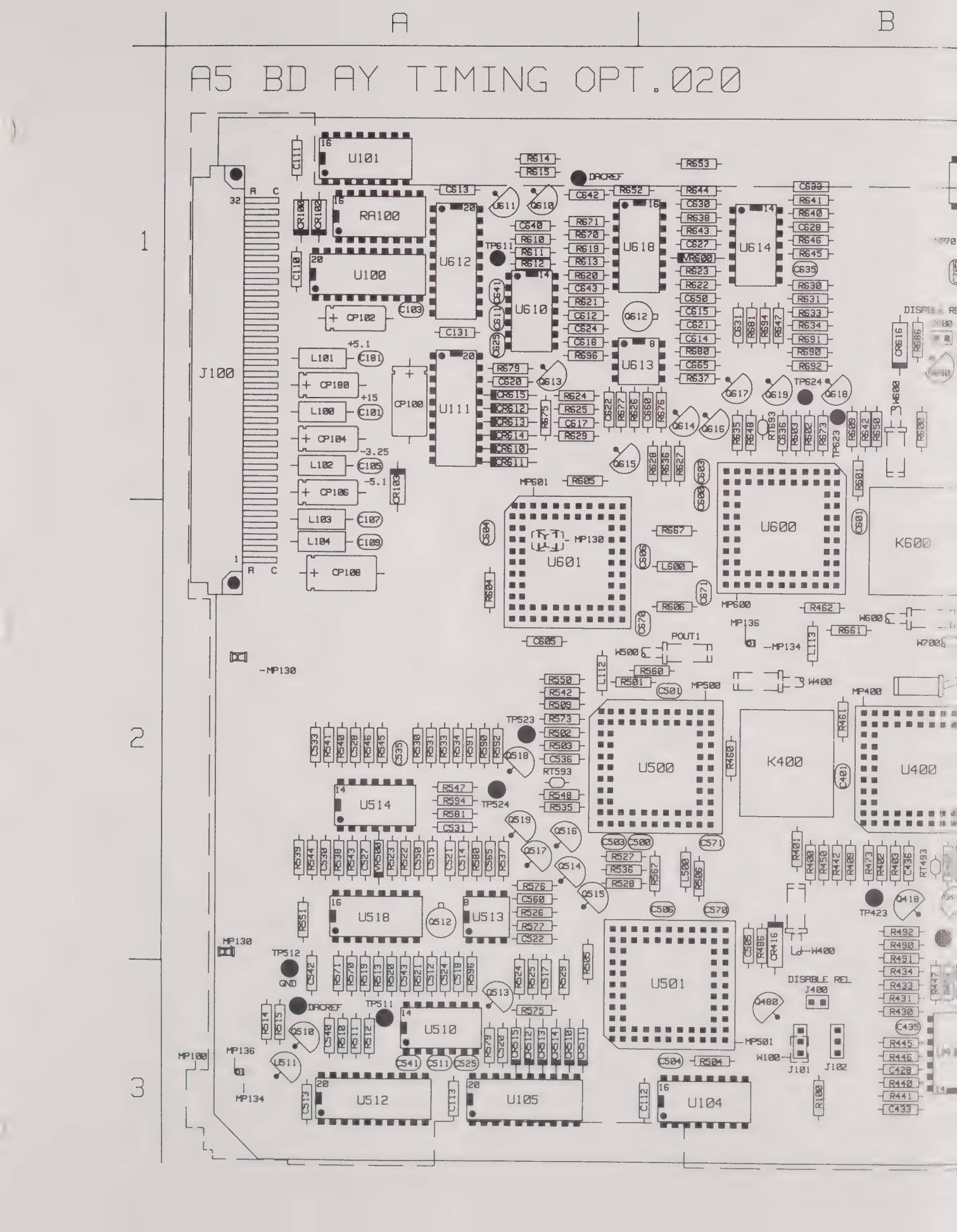
A
B
1
2
3
A5 BD AY TIMING OPT.020
J100
U101
RA100
U100
U612
U610
U618
U614
U613
U111
U600
K600
U601
U500
K400
U400
U514
U518
U513
U501
U510
U512
U105
U104
DACREF
TP611
TP624
TP623
TP523
TP524
TP512
TP511
TP423
MP130
MP134
MP136
MP100
MP601
MP600
MP500
MP400
MP501
POUT1
DISABLE REL
J400
J101
J102
+5.1
+15
-3.25
-5.1
GND

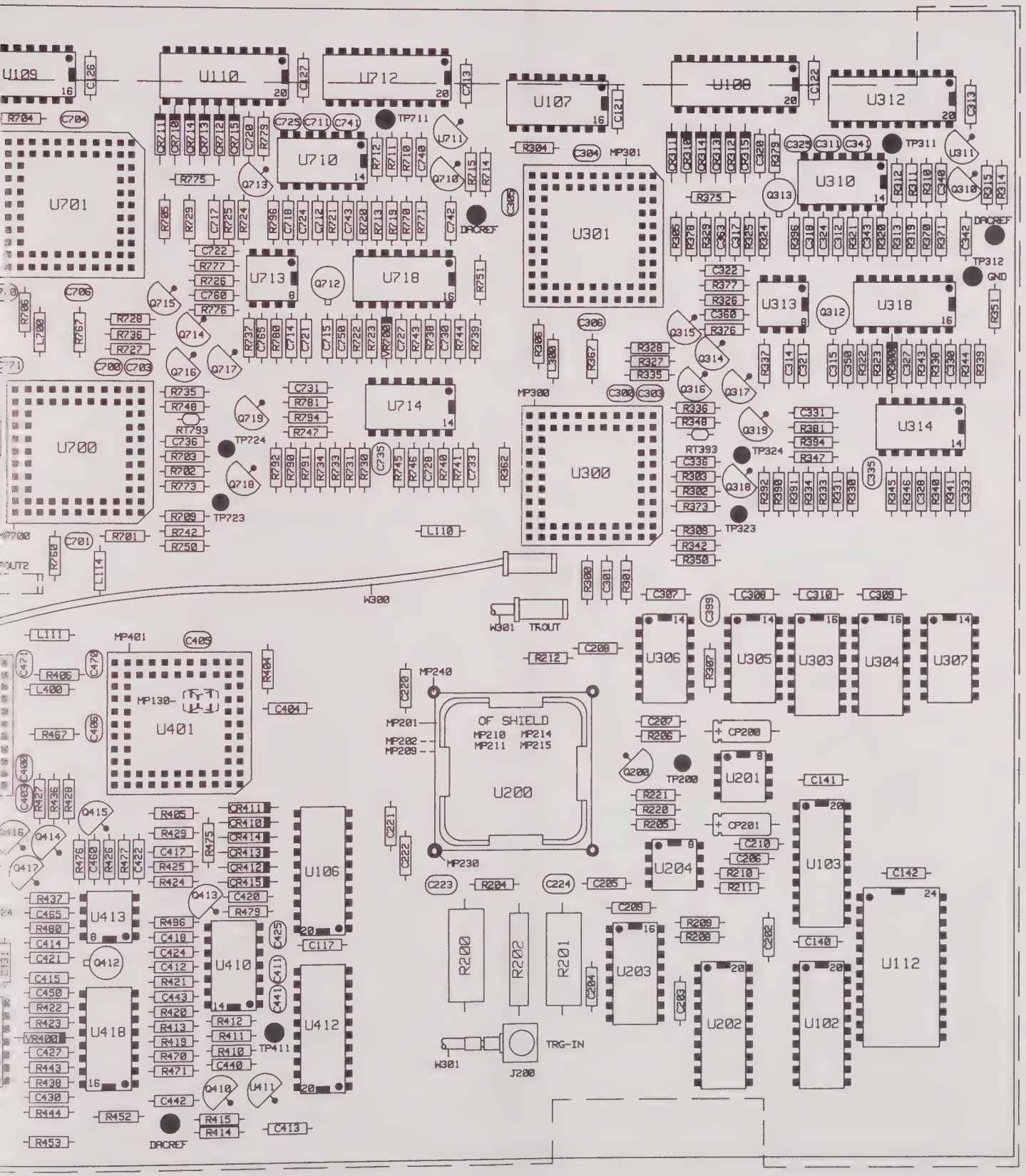

MODEL HP8130A
OPT.020 TIMING BOARD
COMPONENT LAYOUT

FIGURE 6.4-6.

REF. DES.	GRID LOC.	REF. DES.	GRID LOC.	REF. DES.	GRID LOC.	REF. DES.	GRID LOC.	REF. DES.	GRID LOC.	REF. DES.	GRID LOC.	REF. DES.	GR LO
C101	A1	C324	D1	C503	B2	C631	B1	CP200	D2	L113	B2	Q517	A2
C103	A1	C325	D1	C504	B3	C633	B1	CP201	D2	L114	B2	Q518	A2
C105	A1	C327	D1	C505	B2	C635	B1	CR100	A1	L300	C1	Q519	A2
C107	A2	C328	D2	C506	B2	C636	B1	CR102	A1	L400	B2	Q610	A1
C109	A2	C330	D1	C511	A3	C640	A1	CR103	A1	L500	B2	Q612	A1
C110	A1	C331	D1	C512	A3	C641	A1	CR310	D1	L600	B2	Q613	A1
C111	A1	C333	D2	C513	A3	C642	A1	CR311	D1	L700	B1	Q614	A1
C112	B3	C335	D2	C514	A2	C643	A1	CR312	D1			Q615	B1
C113	A3	C336	D2	C515	A2	C650	B1	CR313	D1	MP100	A3	Q616	A1
C117	C3	C340	D1	C517	A3	C660	B1	CR314	D1	MP130	A2	Q617	A1
										MP134	B2		
C121	C1	C341	D1	C518	A3	C665	B1	CR315	D1	MP136	B2	Q618	A1
C122	D1	C342	D1	C520	A3	C670	B2	CR410	C2	MP201	C2	Q619	A1
C126	B1	C343	D1	C521	A2	C671	B2	CR411	C2			Q680	A1
C127	C1	C350	D1	C522	A2	C700	B1	CR412	C2	MP202	C2	Q710	C1
C131	A1	C360	D1	C524	A3	C701	B2	CR413	C2	MP209	C2	Q712	C1
										MP210	C2		
C140	D3	C363	D1	C525	A3	C703	C1	CR414	C2	MP211	C2	Q713	C1
C141	D2	C399	D2	C527	A2	C704	B1	CR415	C2	MP214	C2	Q714	C1
C142	D2	C400	B2	C528	A2	C705	B1	CR416	B2			Q715	C1
C181	A1	C401	B2	C530	A2	C706	B1	CR510	A3	MP215	C2	Q716	C1
C202	D3	C403	B2	C531	A2	C711	C1	CR511	A3	MP230	C2	Q717	C1
										MP240	C2		
C203	D3	C404	C2	C533	A2	C712	C1	CR512	A3	MP300	C1	Q718	C2
C204	C3	C405	C2	C535	A2	C713	C1	CR513	A3	MP301	C1	Q719	C1
C205	C2	C406	B2	C536	A2	C714	C1	CR514	A3	MP400	B2	R100	B3
C206	D2	C411	C3	C540	A3	C715	C1	CR515	A3	MP401	B2	R200	C1
C207	D2	C412	C3	C541	A3	C717	C1	CR610	A1	MP500	B2	R201	C3
										MP501	B3	R202	C3
C208	C2	C413	C3	C542	A3	C718	C1	CR611	A1	MP600	B2	R204	C2
C209	C2	C414	B3	C543	A3	C720	C1	CR612	A1	MP601	A2	R205	D2
C210	D2	C415	B3	C550	A2	C721	C1	CR613	A1	MP700	B2	R206	D2
C220	C2	C417	C2	C560	A2	C722	C1	CR614	A1	MP701	B1	R208	D3
C221	C2	C418	C3	C565	A2	C724	C1	CR615	A1	Q200	C2	R209	D3
										Q310	D1	R210	D2
C222	C2	C420	C2	C570	B2	C725	C1	CR616	B1	Q312	D1		
C223	C2	C421	B3	C571	B2	C727	C1	CR710	C1	Q313	D1	R211	D2
C224	C2	C422	C2	C600	B2	C728	C2	CR711	C1	Q314	D1	R212	C2
C300	C1	C424	C3	C601	B2	C730	C1	CR712	C1			R220	D2
C301	C2	C425	C3	C603	B1	C731	C1	CR713	C1	Q315	D1	R221	D2
										Q316	D1	R300	C2
C303	C1	C427	B3	C604	A2	C733	C2	CR714	C1	Q318	D2		
C304	C1	C428	B3	C605	A2	C735	C2	CR715	C1	Q319	D2	R301	C2
C305	C1	C430	B3	C606	B2	C736	C2			Q410	C3	R302	D2
C306	C1	C431	B3	C611	A1	C740	C1	J100	A1			R303	D2
C307	D2	C433	B3	C612	A1	C741	C1	J101	B3	Q412	B3	R304	C1
								J102	B3	Q413	C2	R305	D1
C308	D2	C435	B3	C613	A1	C742	C1	J200	C3	Q414	B2	R306	C1
C309	D2	C436	B2	C614	B1	C743	C1	J400	B3	Q415	B2	R307	D2
C310	D2	C440	C3	C615	B1	C750	C1	J600	B1	Q416	B2	R309	D2
C311	D2	C441	C3	C617	A1	C760	C1					R310	D1
C312	D1	C442	C3	C618	A1	C765	C1	K400	B2	Q417	B2	R311	D1
								K600	B2	Q418	B2		
C313	D1	C443	C3	C620	A1	C770	B1			Q419	B2	R312	D1
C314	D1	C450	B3	C621	B1	C771	B1	L100	A1	Q480	B3	R313	D1
C315	D1	C460	B2	C622	B1			L101	A1	Q510	A3	R314	D1
C317	D1	C465	B2	C624	A1	CP100	A1	L102	A1			R315	D1
C318	D1	C470	B2	C625	A1	CP102	A1	L103	A2	Q512	A2	R319	D1
						CP104	A1	L104	A2	Q513	A3		
C320	D1	C471	B2	C627	B1	CP106	A2			Q514	A2	R320	D1
C321	D1	C500	B2	C628	B1	CP108	A2	L110	C2	Q515	A2	R321	D1
C322	D1	C501	B2	C630	B1	CP180	A1	L111	B2	Q516	A2	R322	D1
								L112	B2				

REF. DES.	GRID LOC.
R323	D1
R324	D1
R325	D1
R326	D1
R327	C1
R328	C1
R329	D1
R330	D2
R331	D2
R333	D2
R334	D2
R335	C1
R336	D1
R337	D1
R338	D1
R339	D1
R340	D2
R341	D2
R342	D2
R343	D1
R344	D1
R345	D2
R346	D2
R347	D2
R348	D2
R350	D2
R351	D1
R362	C2
R367	C1
R370	D1
R371	D1
R373	D2
R375	D1
R376	D1
R377	D1
R378	D1
R379	D1
R381	D2
R390	D2
R391	D2
R392	D2
R394	D2
R396	D1
R400	B2
R401	B2
R402	B2
R403	B2
R404	C2
R405	C2
R406	B2
R409	B2
R410	C3
R411	C3
R412	C3
R413	C3
R414	C3
R415	C3
R419	C3
R420	C3
R421	C3
R422	B3
R423	B3
R424	C2
R425	C2
R426	B2
R427	B2
R428	B2
R429	C2
R430	B3
R431	B3
R433	B3
R434	B3
R435	B2
R436	B2
R437	B2
R438	B3
R440	B3
R441	B3
R442	B2
R443	B3
R444	B3
R445	B3
R446	B3
R447	B3
R448	B2
R450	B2
R452	B3
R453	B3
R460	B2
R461	B2
R462	B2
R467	B2
R470	C3
R471	C3
R473	B2
R475	B2
R476	B2
R477	B2
R479	C2
R480	B3
R481	B3
R486	B2
R490	B2
R491	B3
R492	B2
R494	B3
R496	C2
R501	B2
R502	A2
R503	A2
R504	B3
R505	A3
R506	B2
R509	A2
R510	A3
R511	A3
R512	A3
R513	A3
R514	A3
R515	A3
R519	A3
R520	A3
R521	A3
R522	A2
R523	A2
R524	A3
R525	A3
R526	A2
R527	B2
R528	B2
R529	A3
R530	A2
R531	A2
R533	A2
R534	A2
R535	A2
R536	B2
R537	A2
R538	A2
R539	A2
R540	A2
R541	A2
R542	A2
R543	A2
R544	A2
R545	A2
R546	A2
R547	A2
R548	A2
R550	A2
R551	A2
R560	B2
R567	B2
R570	A3
R571	A3
R573	A2
R575	A3
R576	A2
R577	A2
R579	A3
R580	A2
R581	A2
R590	A2
R591	A2
R592	A2
R594	A2
R596	A3
R600	B1
R601	B1
R602	B1
R603	B1
R604	A2
R605	A1
R606	B2
R609	B1
R610	A1
R611	A1
R612	A1
R613	A1
R614	A1
R615	A1
R619	A1
R620	A1
R621	A1
R622	B1
R623	B1
R624	A1
R625	A1
R626	B1
R627	B1
R628	B1
R629	A1
R630	B1
R631	B1
R633	B1
R634	B1
R635	B1
R636	B1
R637	B1
R638	B1
R640	B1
R641	B1
R642	B1
R643	B1
R644	B1
R645	B1
R646	B1
R647	B1
R648	B1
R650	B1
R652	B1
R653	B1
R660	B2
R661	B2
R667	B2
R670	A1
R671	A1
R673	B1
R675	A1
R676	B1
R677	B1
R679	A1
R680	B1
R681	B1
R686	B1
R690	B1
R691	B1
R692	B1
R694	B1
R696	A1
R701	B2
R702	C2
R703	C2
R704	B1
R705	C1
R706	B1
R709	C2
R710	C1
R711	C1
R712	C1
R713	C1
R714	C1
R719	C1
R720	C1
R721	C1
R722	C1
R723	C1
R724	C1
R725	C1
R726	C1
R727	C1
R728	C1
R729	C1
R730	C2
R731	C2
R733	C2
R734	C2
R735	C1
R736	C1
R737	C1
R738	C1
R739	C1
R740	C2
R741	C2
R742	C2
R743	C1
R744	C1
R745	C2
R746	C2
R747	C2
R748	C1
R750	C2
R751	C1
R760	B2
R767	B1
R770	C1
R771	C1
R773	C2
R775	C1
R776	C1
R777	C1
R779	C1
R780	C1
R781	C1
R790	C2
R791	C2
R792	C2
R794	C2
R796	C1
RA100	A1
RT393	D2
RT493	B2
RT593	A2
RT693	B1
RT793	C2
TP200	D2
TP311	D1
TP312	D1
TP323	D2
TP324	D2
TP411	C3
TP423	B2
TP424	B2
TP511	A3
TP512	A3
TP523	A2
TP524	A2
TP611	A1
TP623	B1
TP624	B1
TP711	C1
TP723	C2
TP724	C2
U100	A1
U101	A1
U102	D3
U103	D2
U104	B3
U105	A3
U106	C2
U107	C1
U108	C1
U109	B1
U110	C1
U111	A1
U112	D3
U200	C2
U201	D2
U202	D3
U203	C3
U204	D2
U300	C2
U301	C1
U303	D2
U304	D2
U305	D2
U306	D2
U307	D2
U310	D1
U311	D1
U312	D1
U313	D1
U314	D2
U318	D1
U400	B2
U401	C2
U410	C3
U411	C3
U412	C3
U413	B2
U414	B3
U418	B3
U500	B2
U501	B3
U510	A3
U511	A3
U512	A3
U513	A2
U514	A2
U518	A2
U600	B2
U601	A2
U610	A1
U611	A1
U612	A1
U613	B1
U614	B1
U618	B1
U700	B2
U701	B1
U710	C1
U711	C1
U712	C1
U713	C1
U714	C1
U718	C1
VR300	D1
VR400	B3
VR500	A2
VR600	B1
VR700	C1
W100	B3
W300	C2
W301	C2
W400	B2
W500	B2
W600	B1
W700	B2

MODEL HP8130A
OPT.020 TIMING BOARD
COMPONENT LOCATION CHART

FIGURE 6.4-7.

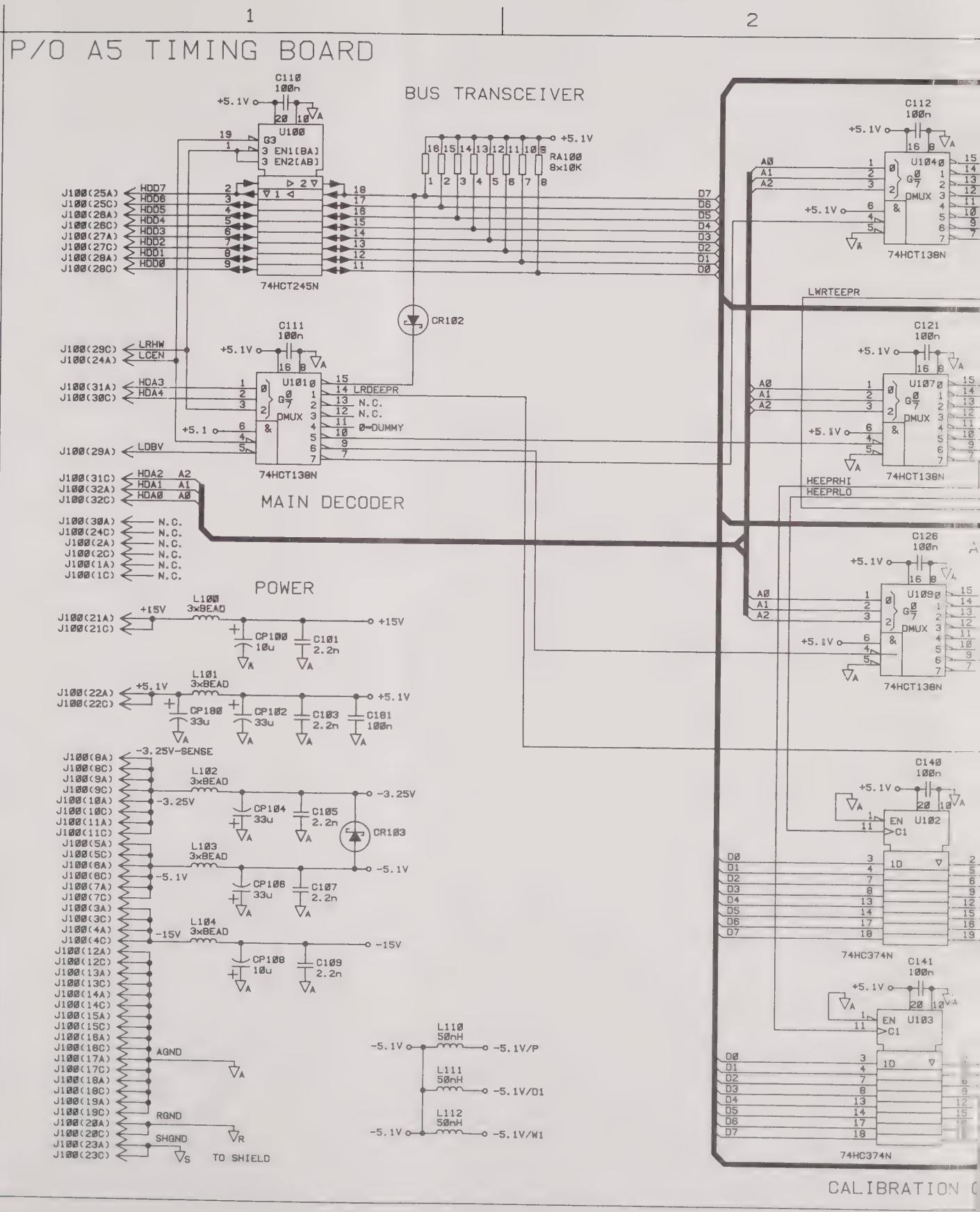
P/O A5 TIMING BOARD
BUS TRANSCEIVER
MAIN DECODER
POWER
74HCT245N
74HCT138N
74HC374N
TO SHIELD
CALIBRATION

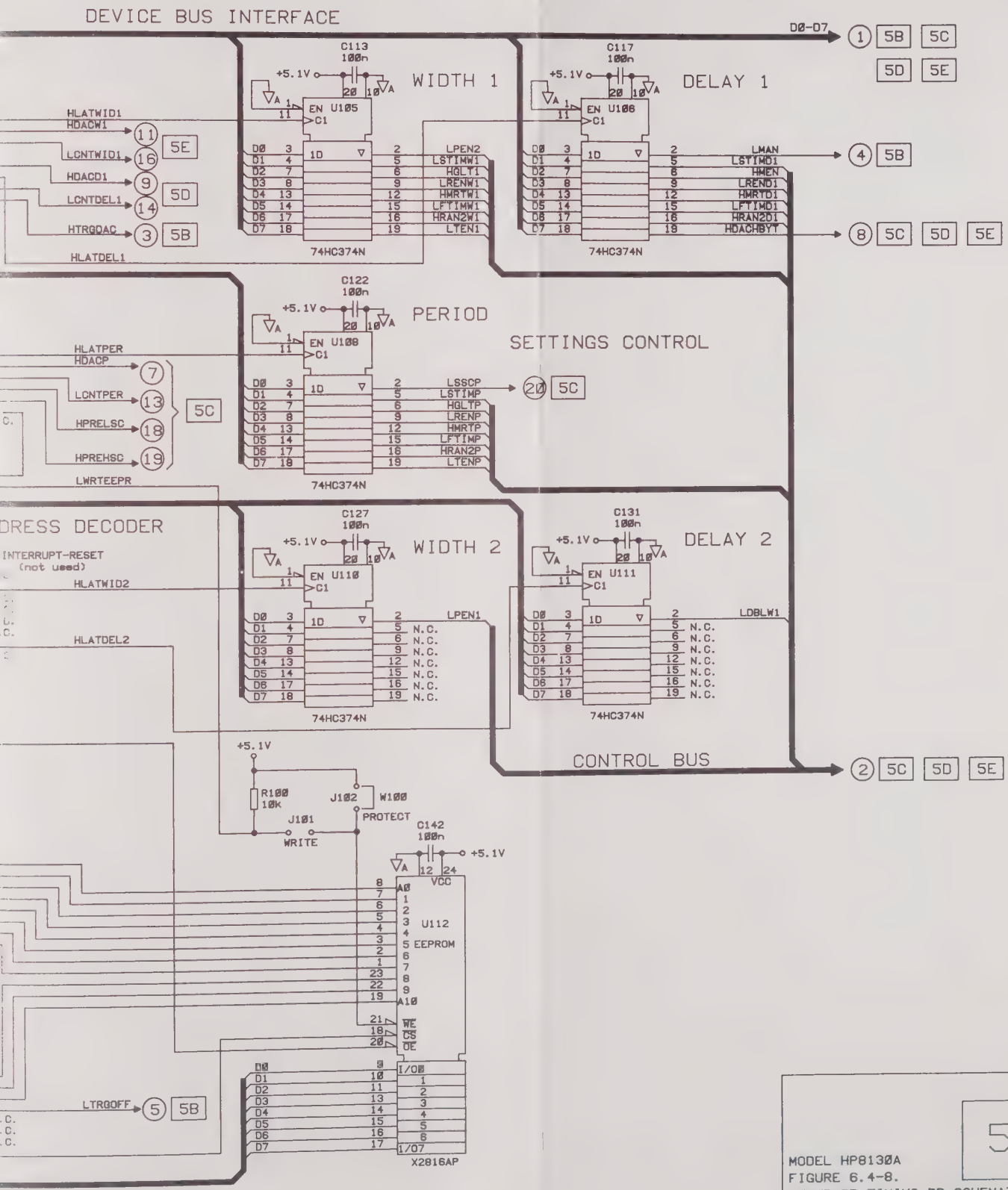
DEVICE BUS INTERFACE
D0-D7
WIDTH 1
DELAY 1
PERIOD
SETTINGS CONTROL
WIDTH 2
DELAY 2
CONTROL BUS
74HC374N
HLATWID1
HDACW1
LCNTWID1
HDACD1
LCNTDEL1
HTRGDAC
HLATDEL1
HLATPER
HDACP
LCNTPER
HPRELSC
HPREHSC
LWRTEEPR
INTERRUPT-RESET
(not used)
HLATWID2
HLATDEL2
LTRGOFF
R100
10K
J102
W100
PROTECT
J101
WRITE
U112
EEPROM
X2816AP
MODEL HP8130A
FIGURE 6.4-8.
STANDARD TIMING BD SCHEMATICS
(SHEET 1 OF 8)
5A

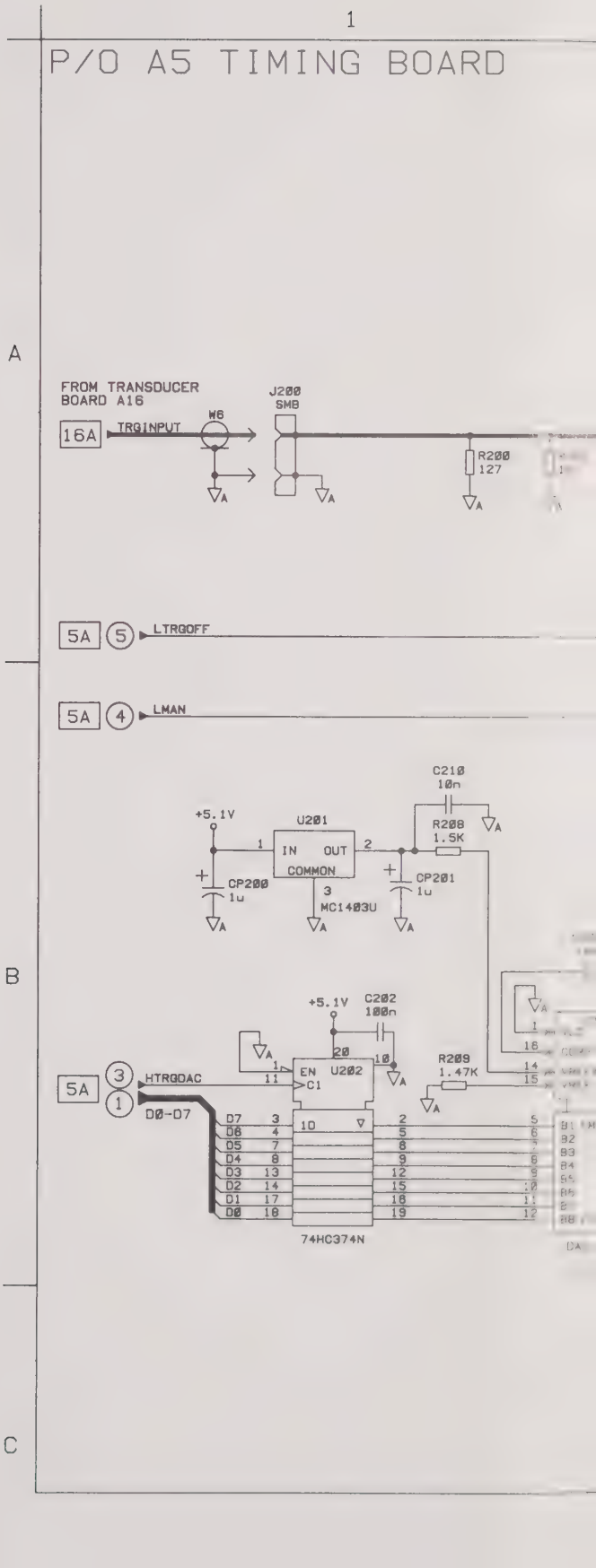
1
P/O A5 TIMING BOARD
A
B
C
FROM TRANSDUCER BOARD A16
16A
TRGINPUT
W6
J200 SMB
R200 127
5A 5 LTRGOFF
5A 4 LMAN
C210 10n
+5.1V
U201
IN OUT COMMON
MC1403U
R208 1.5K
CP200 1u
CP201 1u
+5.1V
C202 100n
U202
EN C1
5A 3 HTRGDAC
5A 1 D0-D7
R209 1.47K
D7 D6 D5 D4 D3 D2 D1 D0
1D
74HC374N

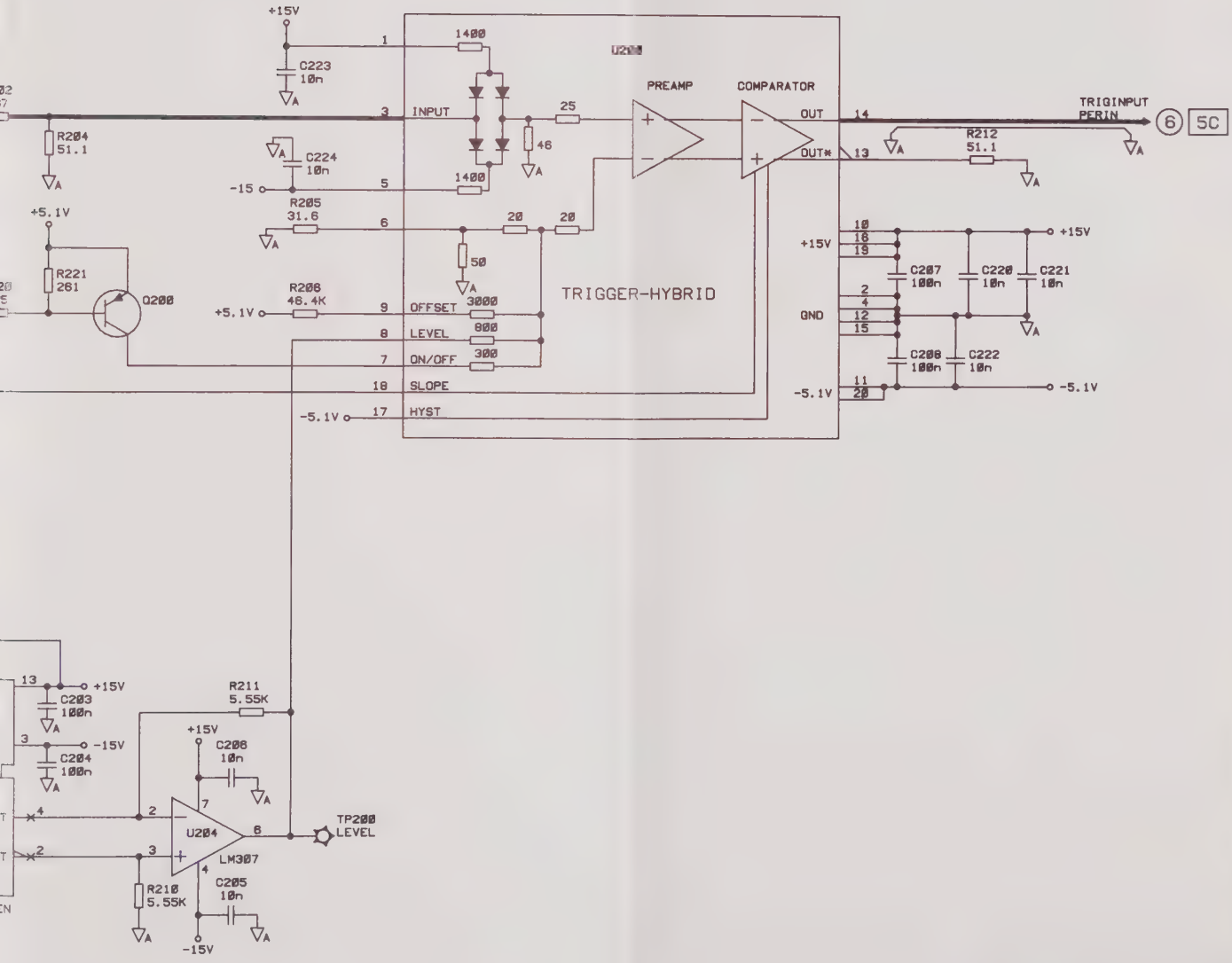

5B

MODEL HP8130A
FIGURE 6.4-9.
STANDARD TIMING BD SCHEMATICS
(SHEET 2 OF 8)

P/O A5 TIMING BOARD

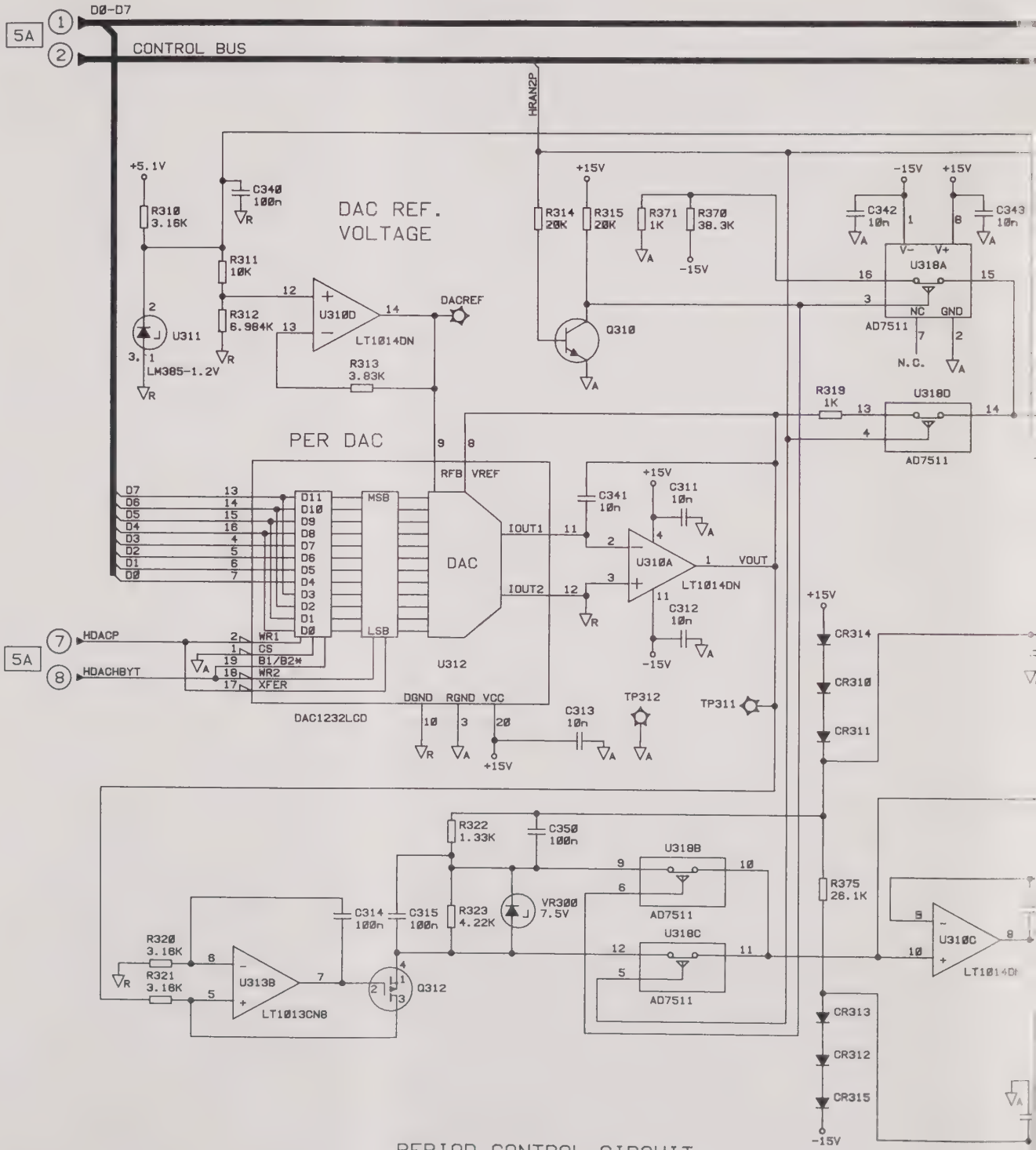

PERIOD CONTROL CIRCUIT

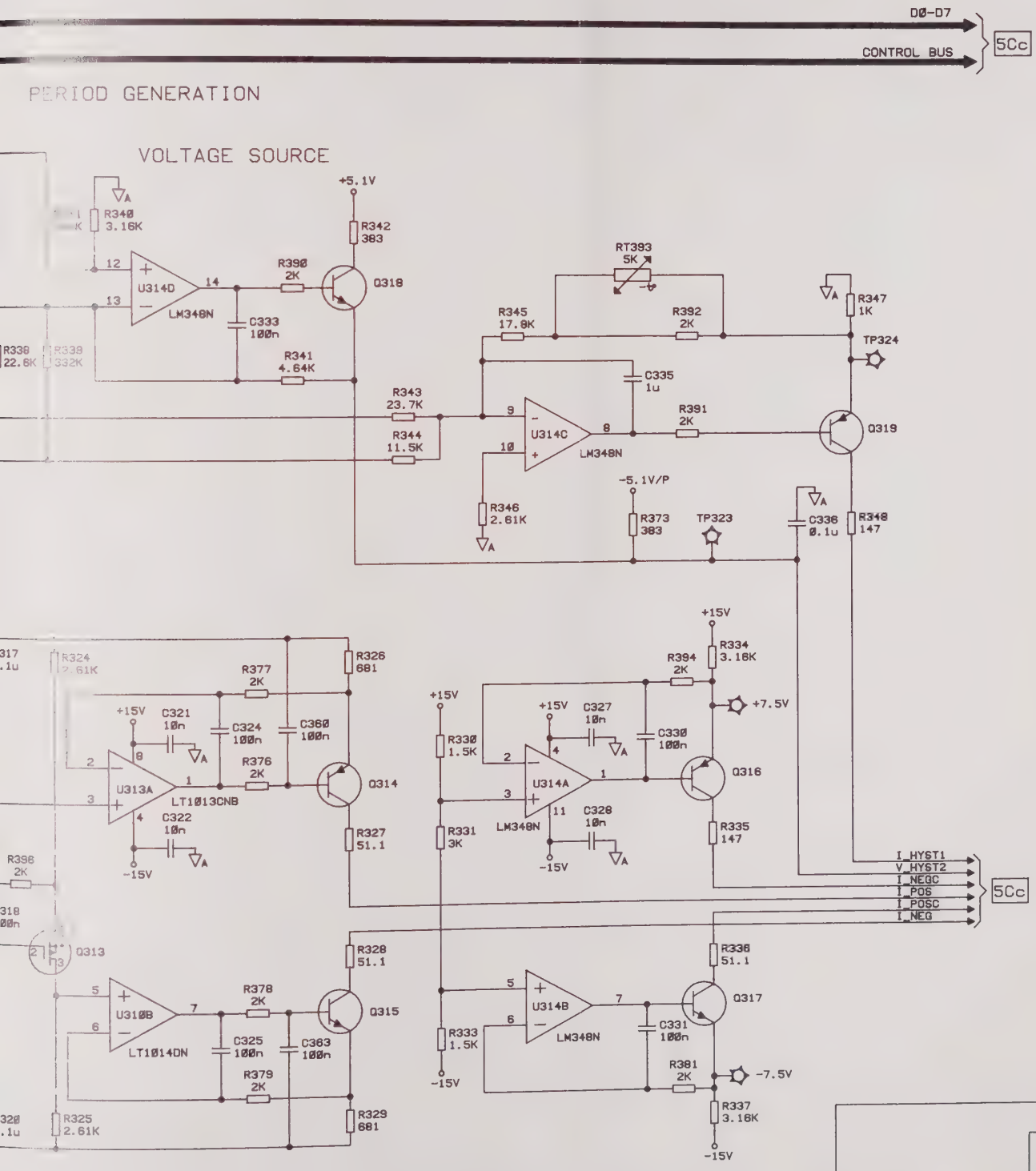

CURRENT SOURCES

5C

MODEL HP8130A
FIGURE 6.4-10.
STANDARD TIMING BD SCHEMATICS
(SHEET 3 OF 8)
TIMING BOARD (A5)

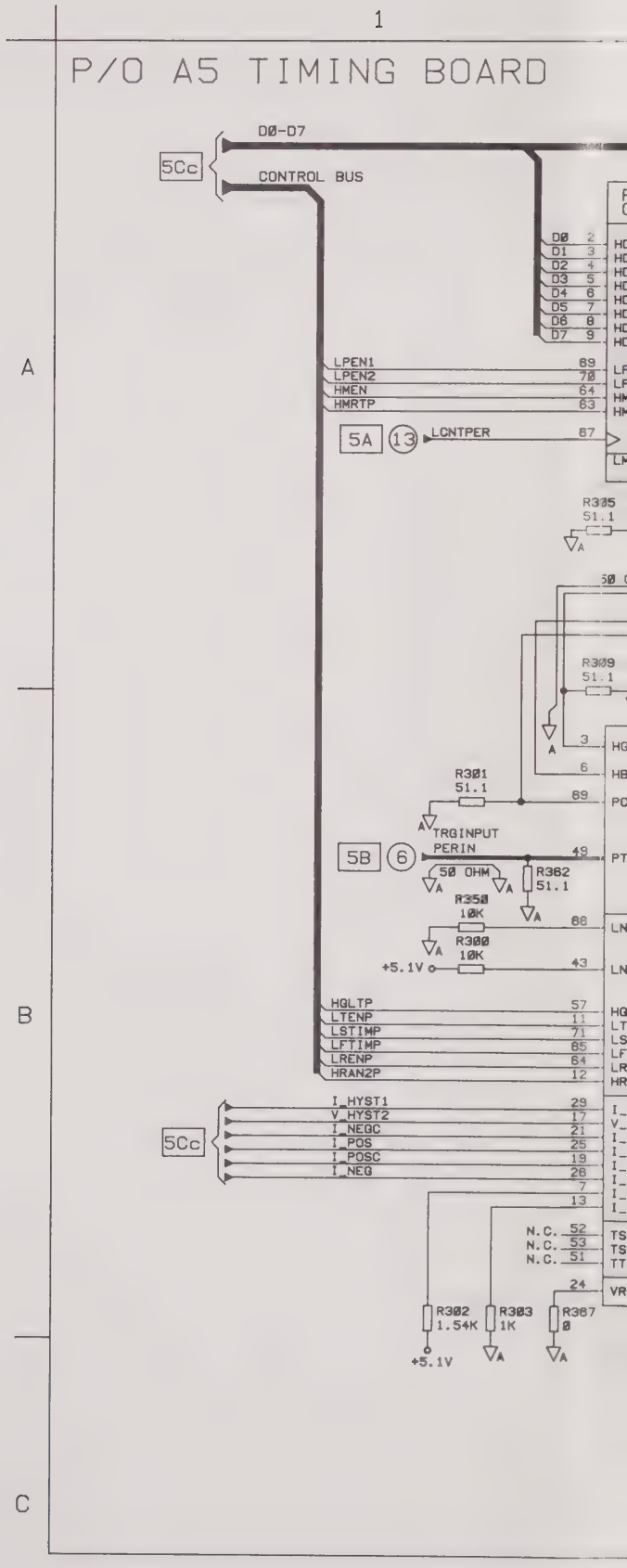
1
P/O A5 TIMING BOARD
A
B
C
D0-D7
5Cc
CONTROL BUS
D0 2
D1 3
D2 4
D3 5
D4 6
D5 7
D6 8
D7 9
LPEN1 89
LPEN2 70
HMEN 64
HMRTP 63
5A 13 LCNTPER 67
R305 51.1
R309 51.1
R301 51.1
TRGINPUT
PERIN
5B 6
49
50 OHM
R362 51.1
R350 10K
R300 10K
+5.1V
86
43
HQLTP 57
LTENP 11
LSTIMP 71
LFTIMP 85
LRENP 64
HRAN2P 12
I_HYST1 29
V_HYST2 17
I_NEGC 21
I_POS 25
I_POSC 19
I_NEG 26
7
13
N.C. 52
N.C. 53
N.C. 51
24
R302 1.54K
R303 1K
R307 0
+5.1V

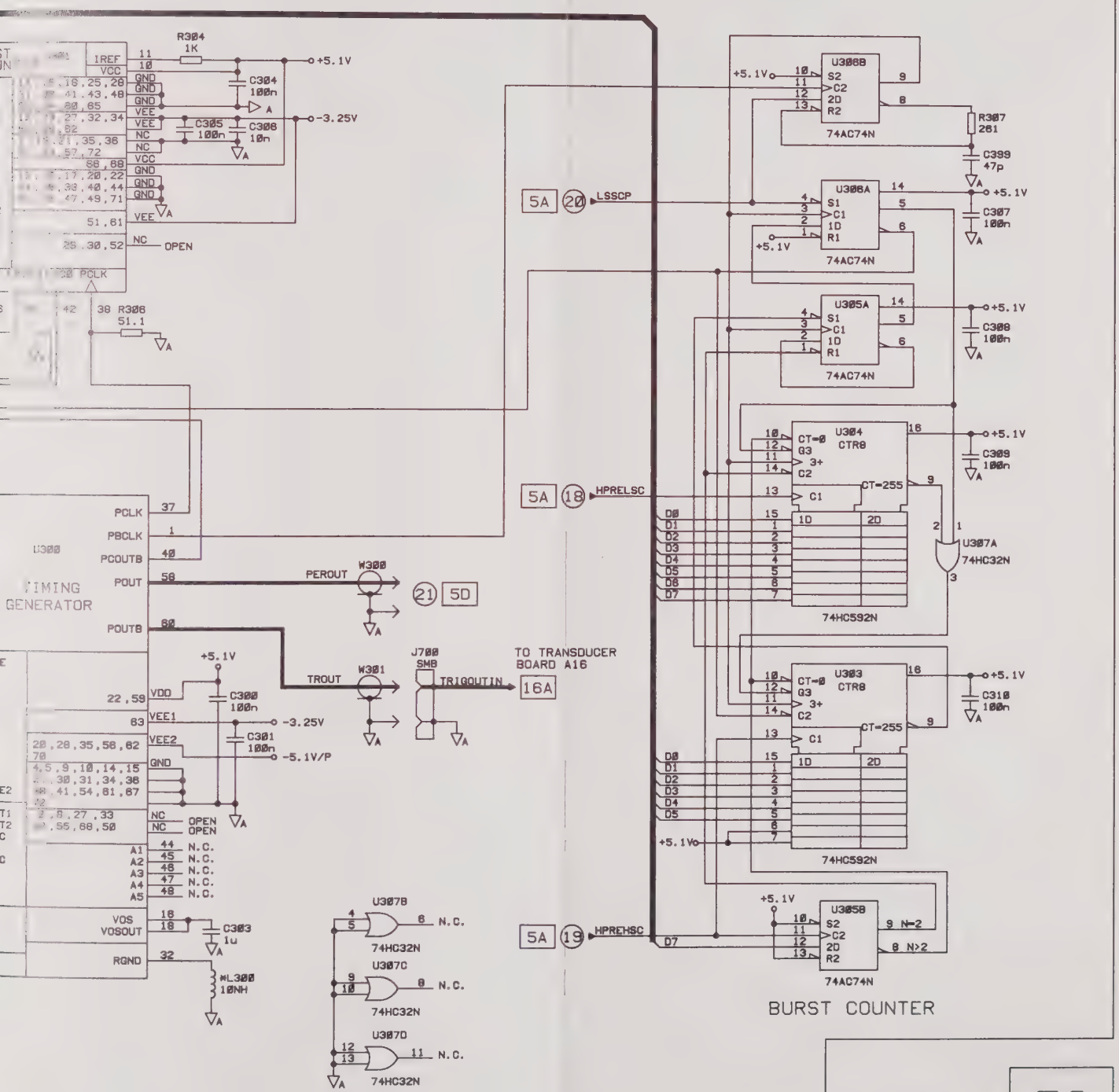

5C

MODEL HP8130A
FIGURE 6.4-11.
STANDARD TIMING BD SCHEMATICS
(SHEET 4 OF 8)

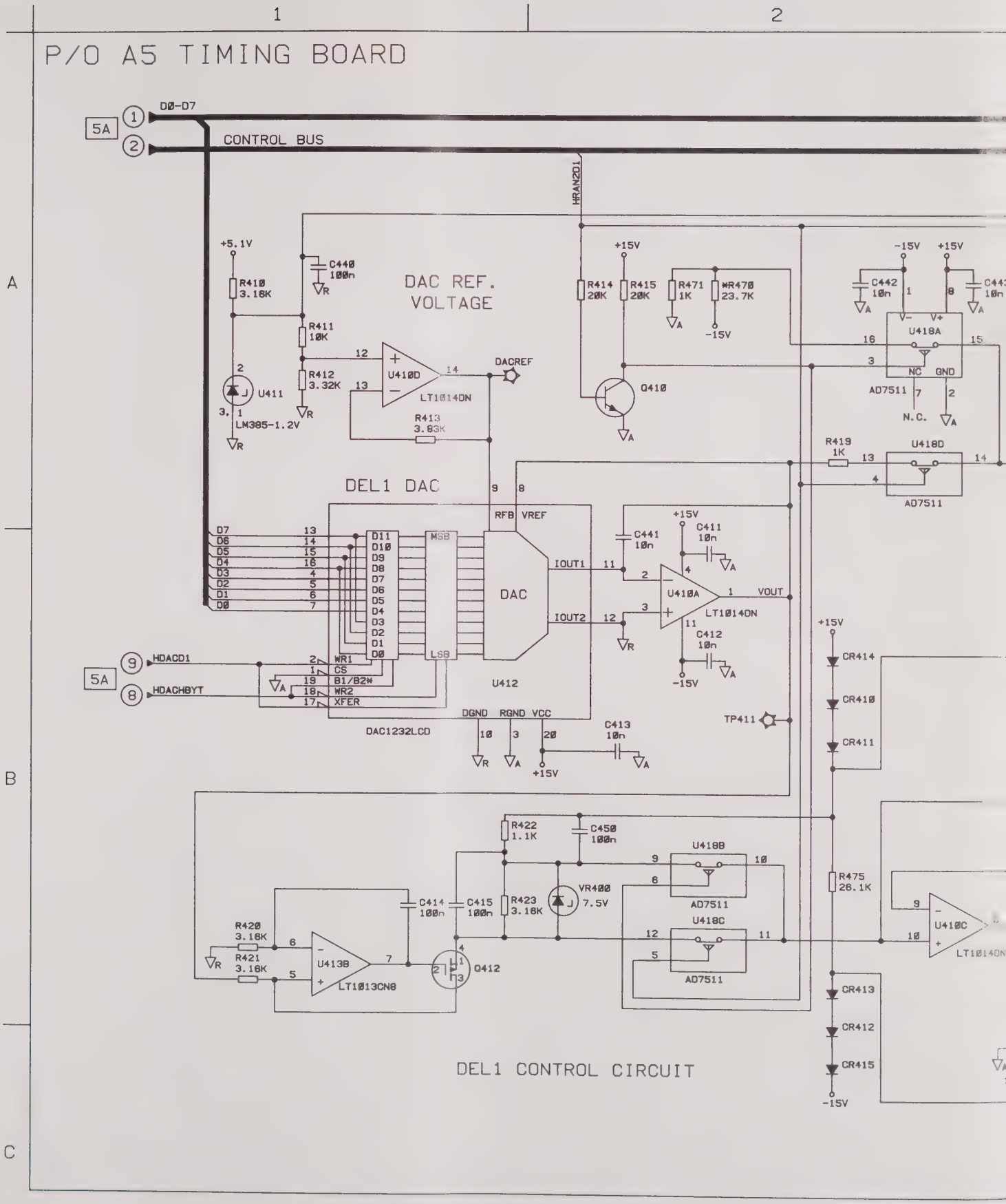

P/O A5 TIMING BOARD
1
2
A
B
C
5A
D0-D7
CONTROL BUS
HRAN2D1
+5.1V
R410 3.16K
C440 100n
R411 10K
R412 3.32K
U411
LM385-1.2V
DAC REF. VOLTAGE
U410D
LT1014DN
DACREF
R413 3.83K
+15V
R414 20K
R415 20K
R471 1K
*R470 23.7K
-15V
Q410
C442 10n
U418A
AD7511
NC
GND
N.C.
R419 1K
U418D
DEL1 DAC
D7
D6
D5
D4
D3
D2
D1
D0
D11
D10
D9
D8
MSB
LSB
RFB
VREF
DAC
IOUT1
IOUT2
U412
DAC1232LCD
WR1
CS
B1/B2*
WR2
XFER
DGND
RGND
VCC
C441 10n
C411 10n
U410A
LT1014DN
VOUT
C412 10n
C413 10n
TP411
HDACD1
HDACHBYT
CR414
CR410
CR411
R422 1.1K
C450 100n
U418B
AD7511
R423 3.16K
VR400 7.5V
U418C
R475 26.1K
U410C
LT1014DN
C414 100n
C415 100n
R420 3.16K
R421 3.16K
U413B
LT1013CN8
Q412
CR413
CR412
CR415
DEL1 CONTROL CIRCUIT

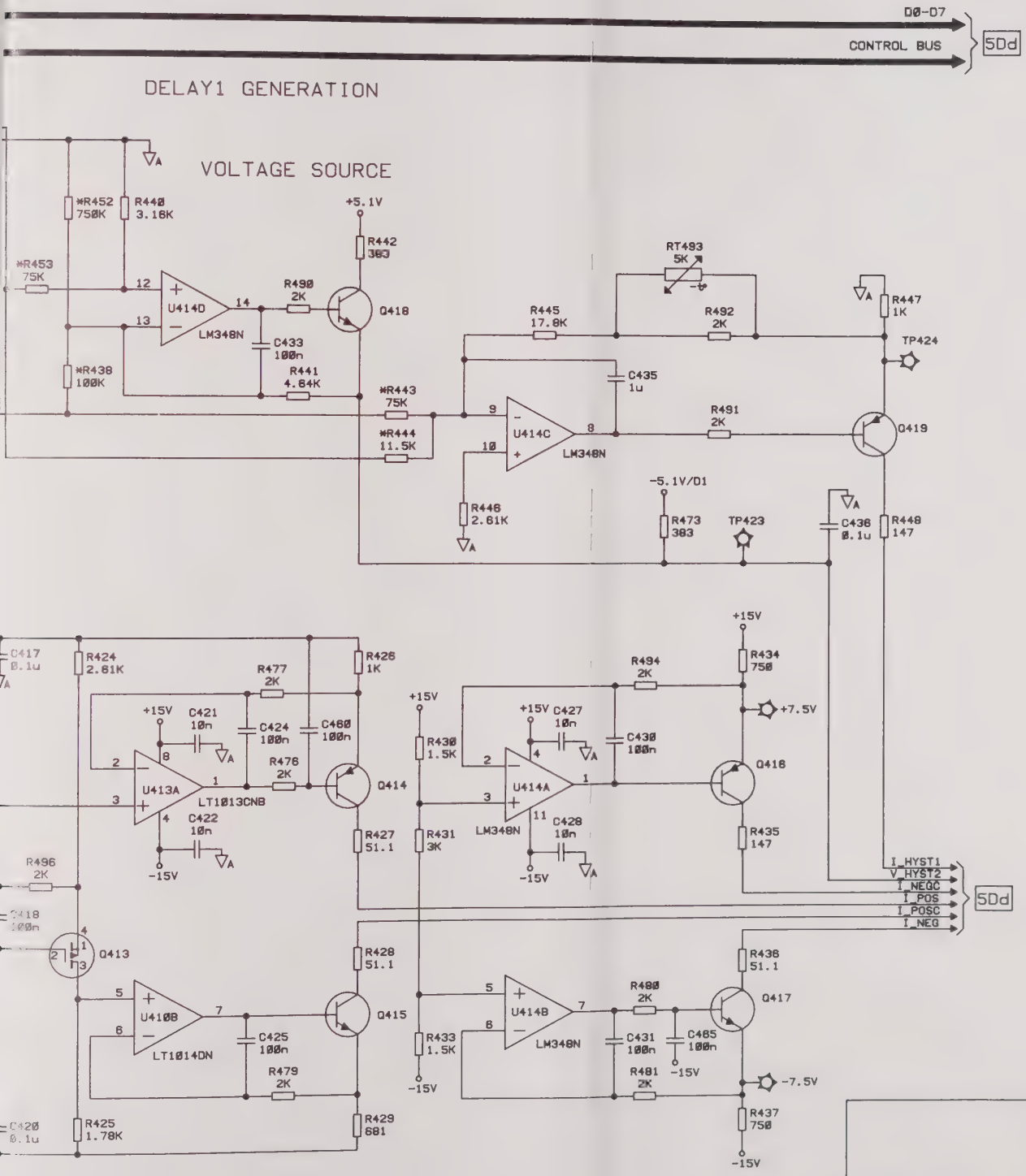

5D

MODEL HP8130A
FIGURE 6.4-12.
STANDARD TIMING BD SCHEMATICS
(SHEET 5 OF 8)

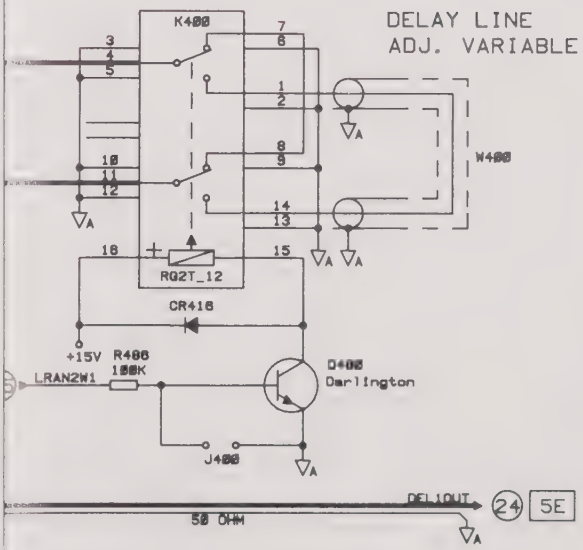

5D

MODEL HP8130A
FIGURE 6.4-14.
STANDARD TIMING BD SCHEMATICS
(SHEET 6 OF 8)

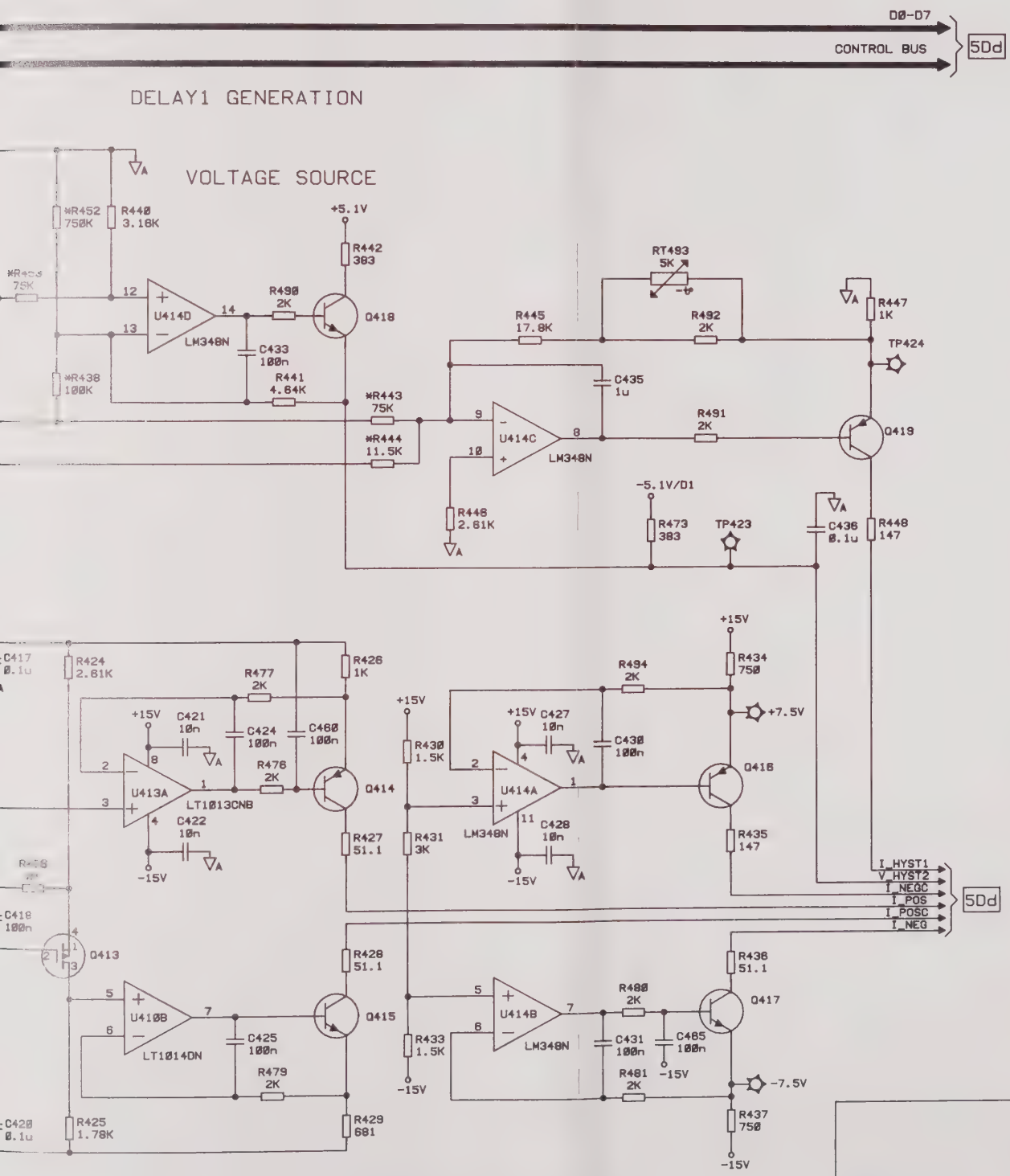

5D

MODEL HP8130A
FIGURE 6.4-12.
STANDARD TIMING BD SCHEMATICS
(SHEET 5 OF 8)

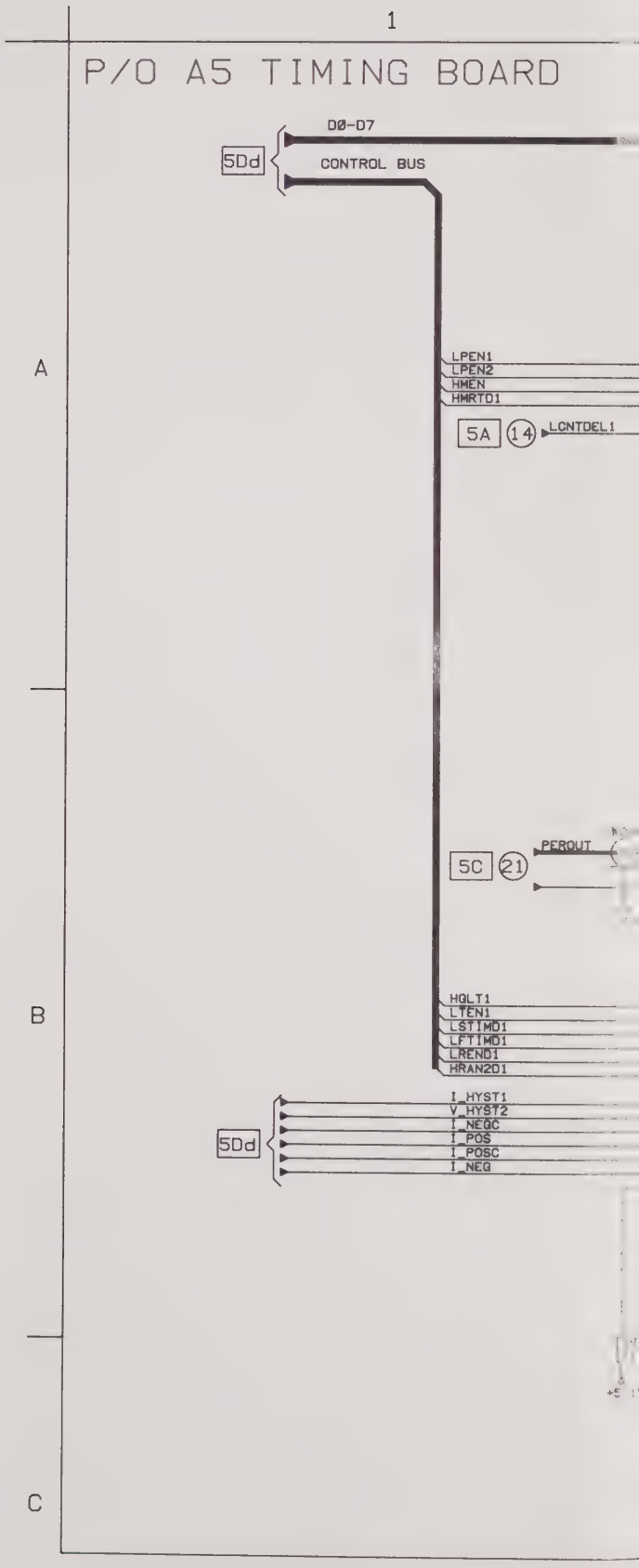
1
P/O A5 TIMING BOARD
A
B
C
D0-D7
5Dd
CONTROL BUS
LPEN1
LPEN2
HMEN
HMRTD1
5A
14
LCNTDEL1
PEROUT
5C
21
HQLT1
LTEN1
LSTIMD1
LFTIMD1
LREND1
HRAN2D1
I_HYST1
V_HYST2
I_NEGC
I_POS
I_POSC
I_NEG
5Dd

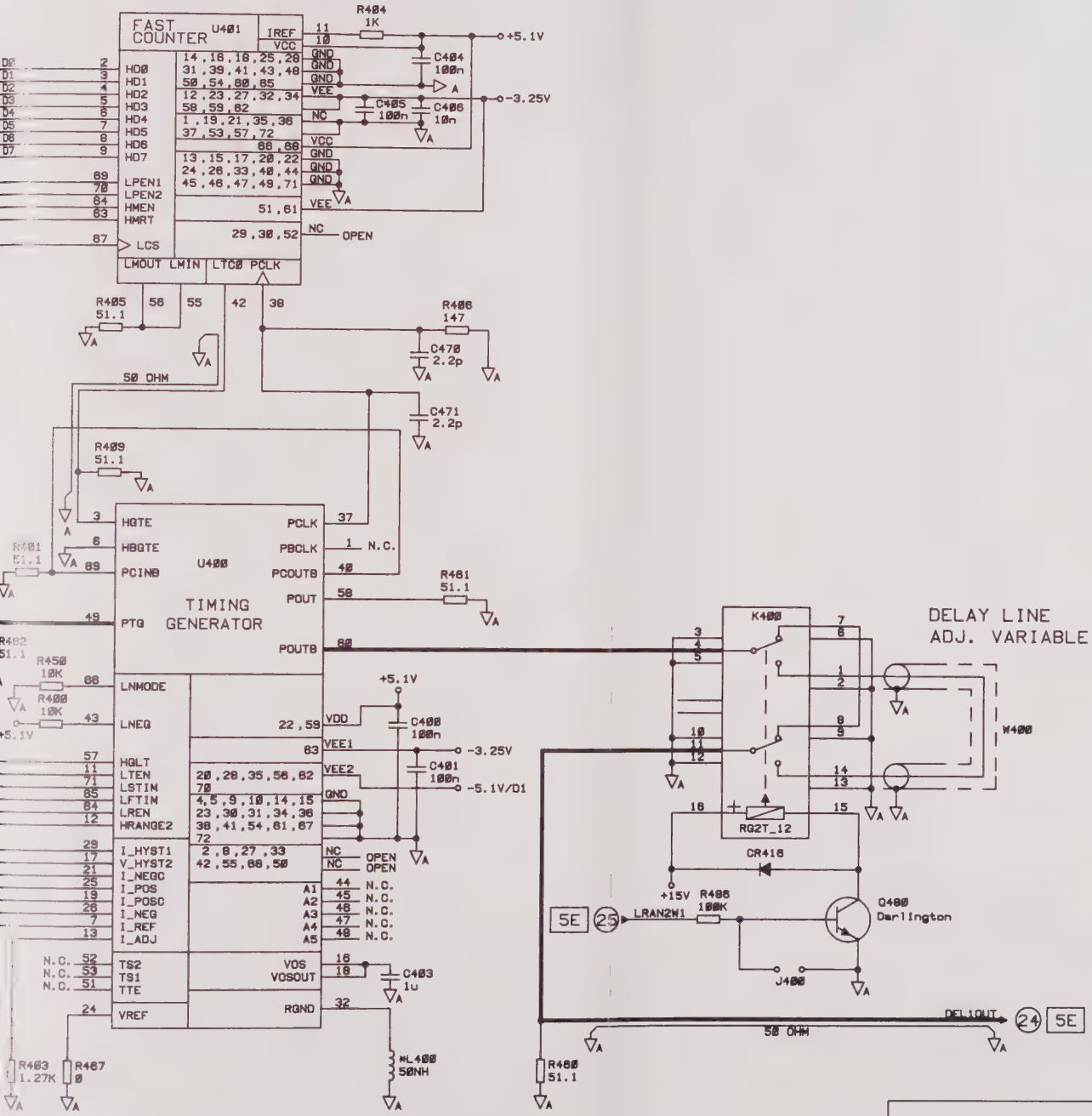

5D

MODEL HP8130A
FIGURE 6.4-14.
STANDARD TIMING BD SCHEMATICS
(SHEET 6 OF 8)

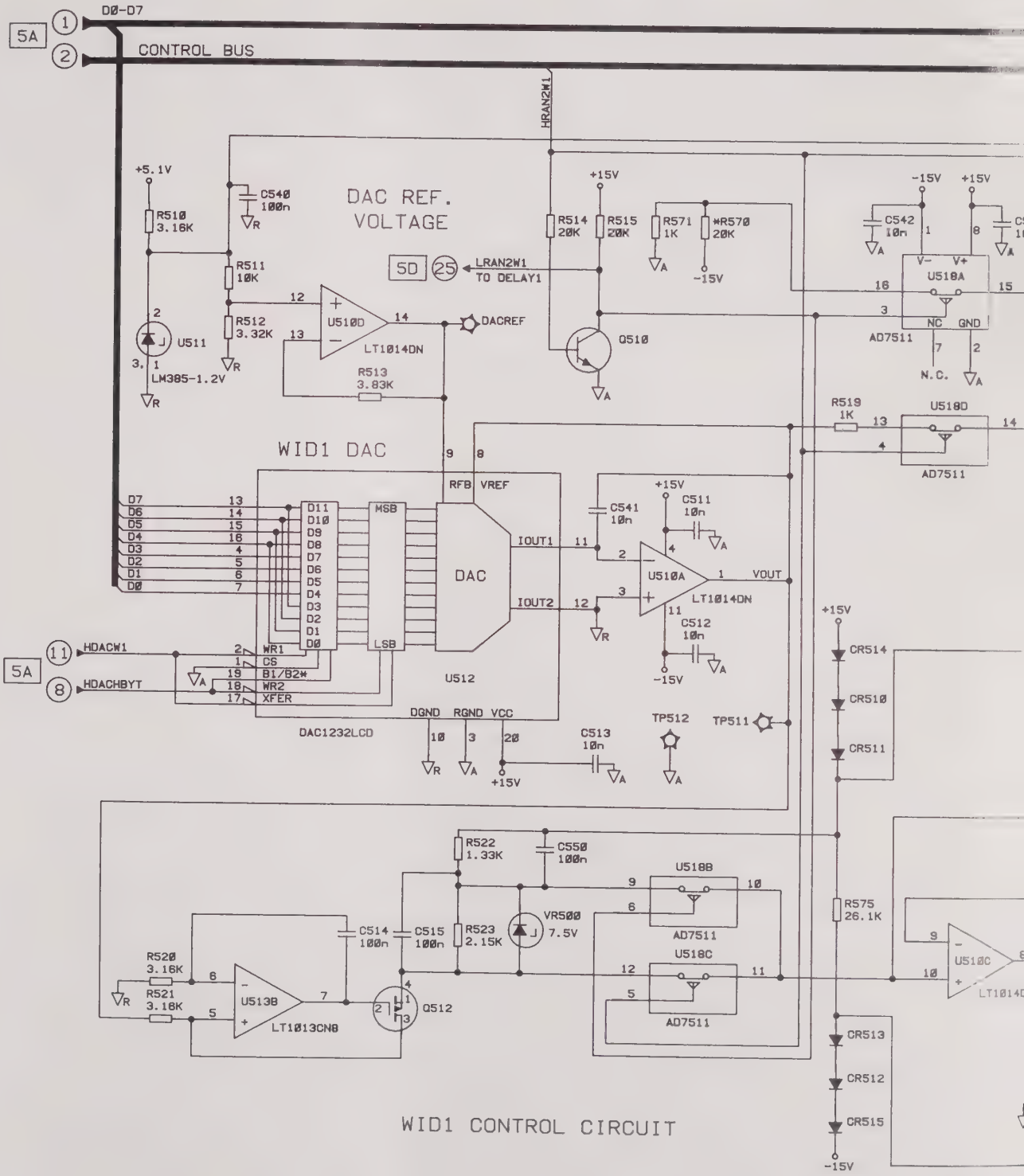
P/O A5 TIMING BOARD
D0-D7
CONTROL BUS
HRAN2W1
DAC REF. VOLTAGE
+5.1V
R510 3.16K
C540 100n
R511 10K
R512 3.32K
U511
LM385-1.2V
U510D
LT1014DN
R513 3.83K
DACREF
LRAN2W1 TO DELAY1
+15V
R514 20K
R515 20K
R571 1K
*R570 20K
-15V
Q510
C542 10n
U510A
AD7511
N.C.
R519 1K
U510D
WID1 DAC
RFB
VREF
DAC
IOUT1
IOUT2
C541 10n
C511 10n
C512 10n
U510A
LT1014DN
VOUT
U512
DAC1232LCD
HDACW1
HDACHBYT
WR1
CS
BI/B2#
WR2
XFER
DGND
RGND
VCC
C513 10n
TP512
TP511
CR514
CR510
CR511
R522 1.33K
C550 100n
U510B
R520 3.16K
R521 3.16K
U513B
LT1013CN8
C514 100n
C515 100n
R523 2.15K
VR500 7.5V
Q512
U510C
R575 26.1K
CR513
CR512
CR515
WID1 CONTROL CIRCUIT

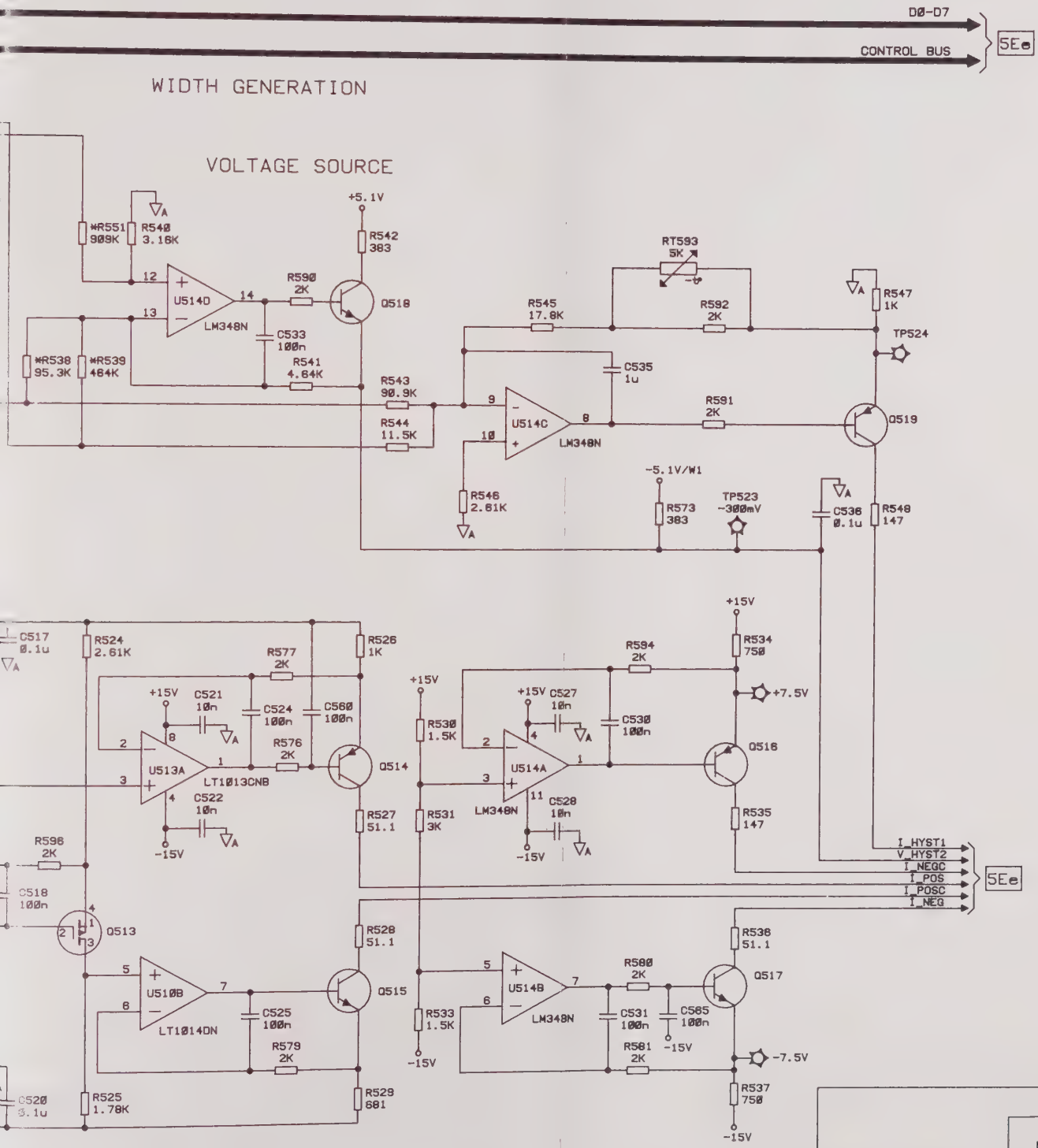

5E

MODEL HP8130A
FIGURE 6.4-14.
STANDARD TIMING BD SCHEMATICS
(SHEET 7 OF 8)

P/O A5 TIMING BOARD

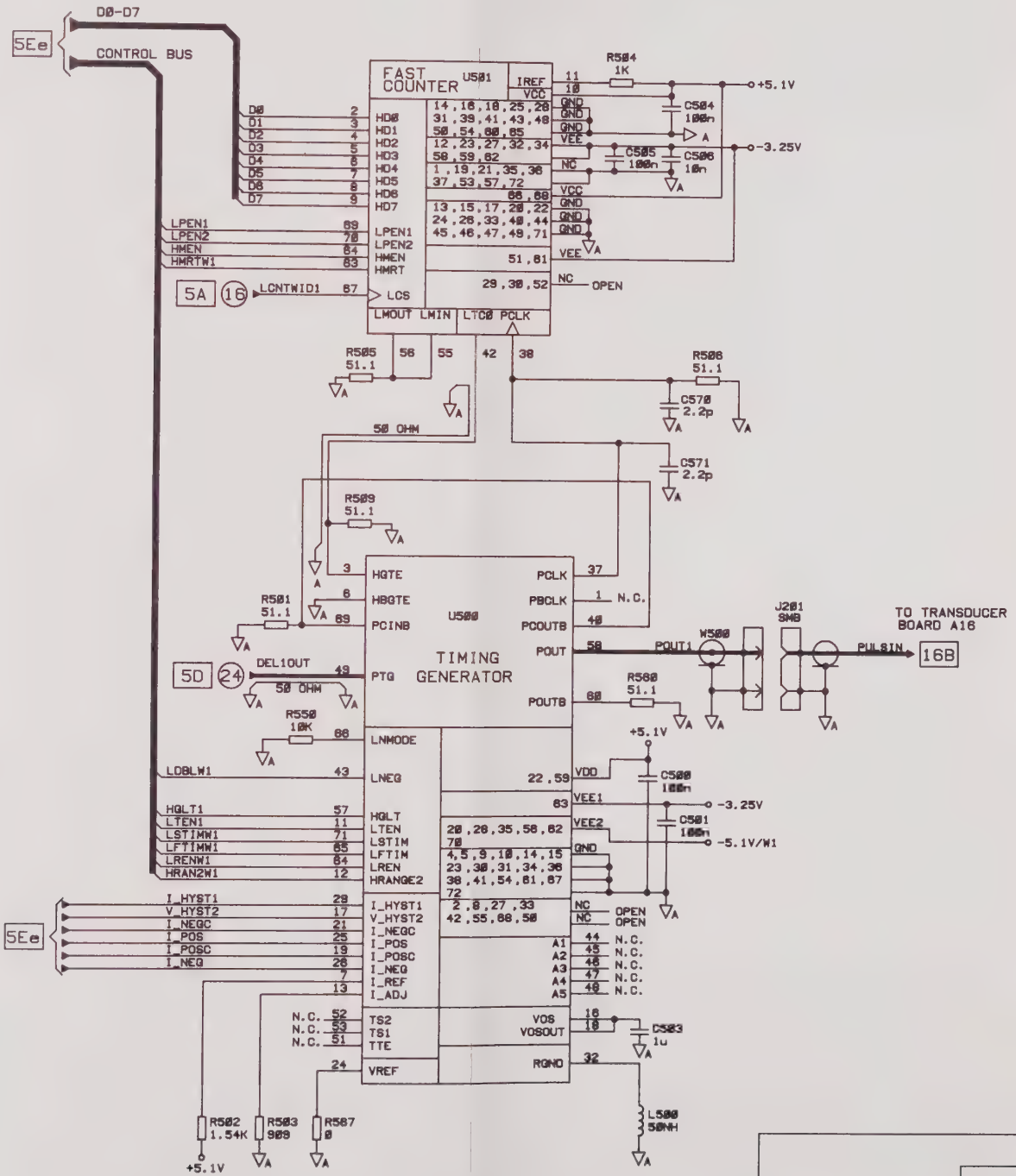

MODEL HP8130A
FIGURE 6.4-15.
STANDARD TIMING BD SCHEMATICS
(SHEET 8 OF 8)

5E

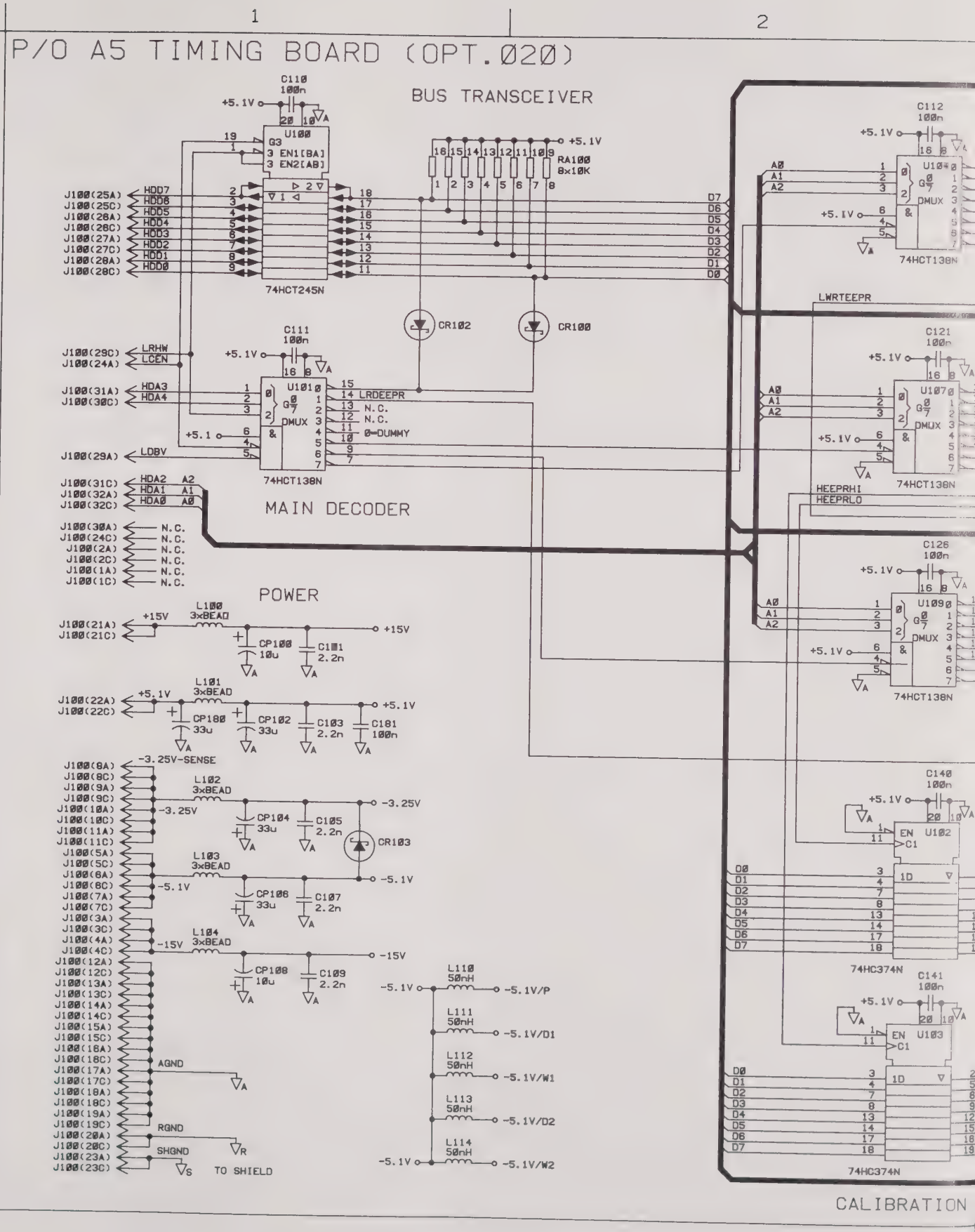
P/O A5 TIMING BOARD (OPT.020)
BUS TRANSCEIVER
MAIN DECODER
POWER
CALIBRATION
74HCT245N
74HCT138N
74HC374N
RA100 8x10K
CR102
CR100
CR103
LRDEEPR
LWRTEEPR
HEEPRHI
HEEPRLO
-3.25V-SENSE
AGND
RGND
SHGND
TO SHIELD
-5.1V/P
-5.1V/D1
-5.1V/W1
-5.1V/D2
-5.1V/W2

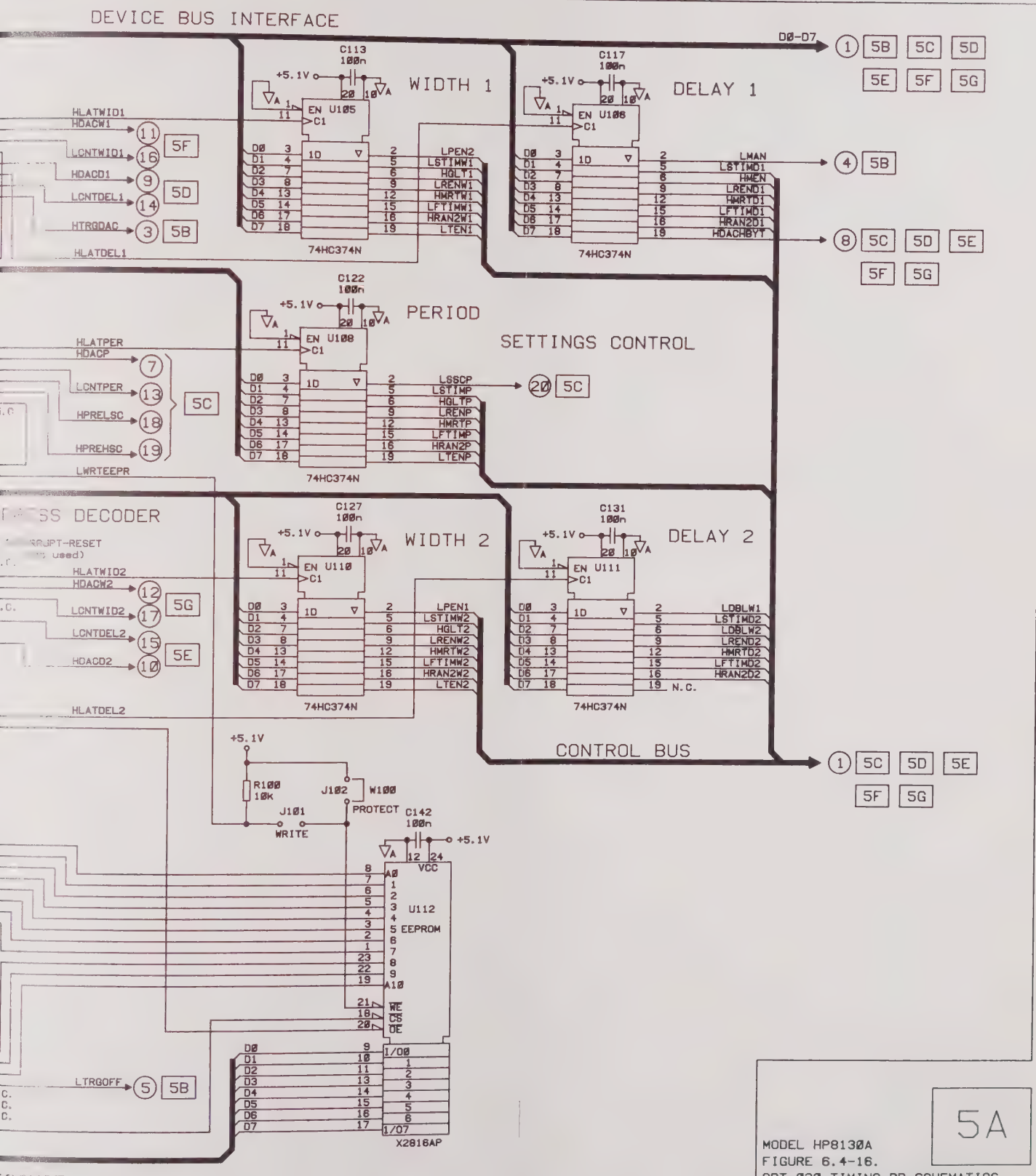

MODEL HP8130A
FIGURE 6.4-16.
OPT.020 TIMING BD SCHEMATICS
(SHEET 1 OF 12)

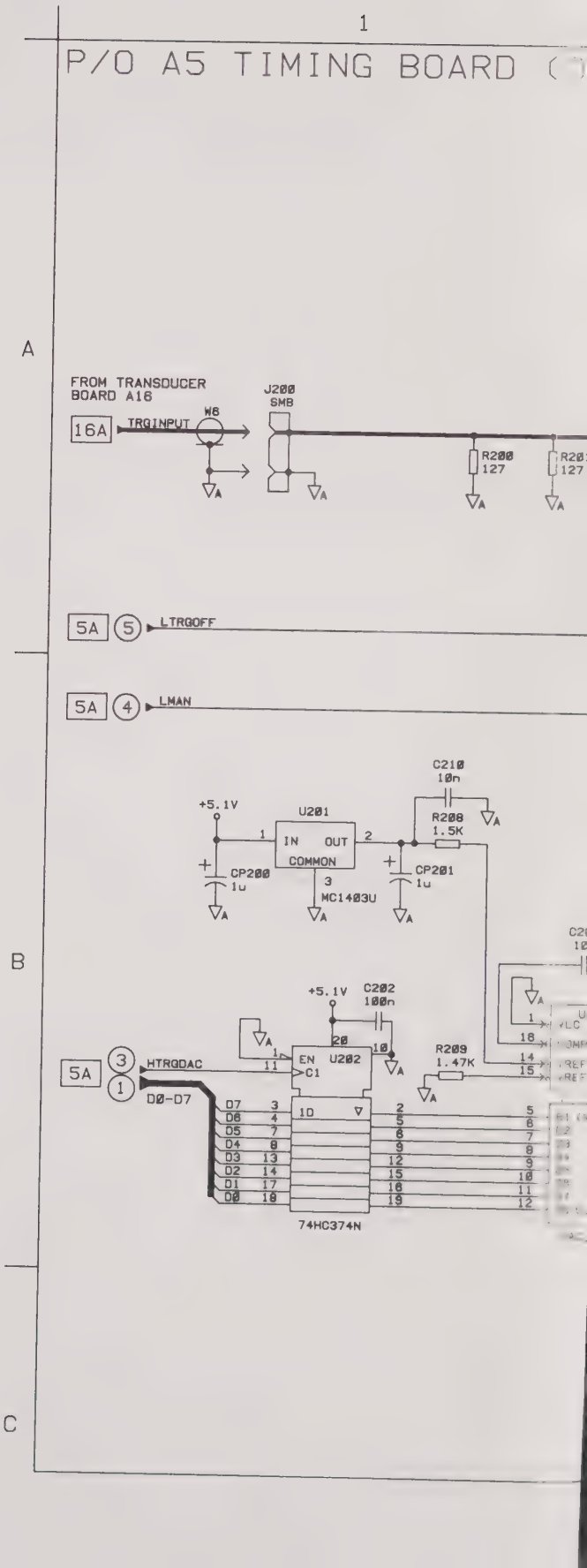
1
P/O A5 TIMING BOARD
A
B
C
FROM TRANSDUCER BOARD A16
16A
TRGINPUT
W8
J200 SMB
R200 127
5A 5 LTRGOFF
5A 4 LMAN
+5.1V
U201
IN
OUT
COMMON
MC1403U
CP200 1u
CP201 1u
C210 10n
R208 1.5K
C202 100n
R209 1.47K
5A 3 HTRGDAC
5A 1 D0-D7
EN C1
U202
1D
D7 D6 D5 D4 D3 D2 D1 D0
74HC374N

T.020)

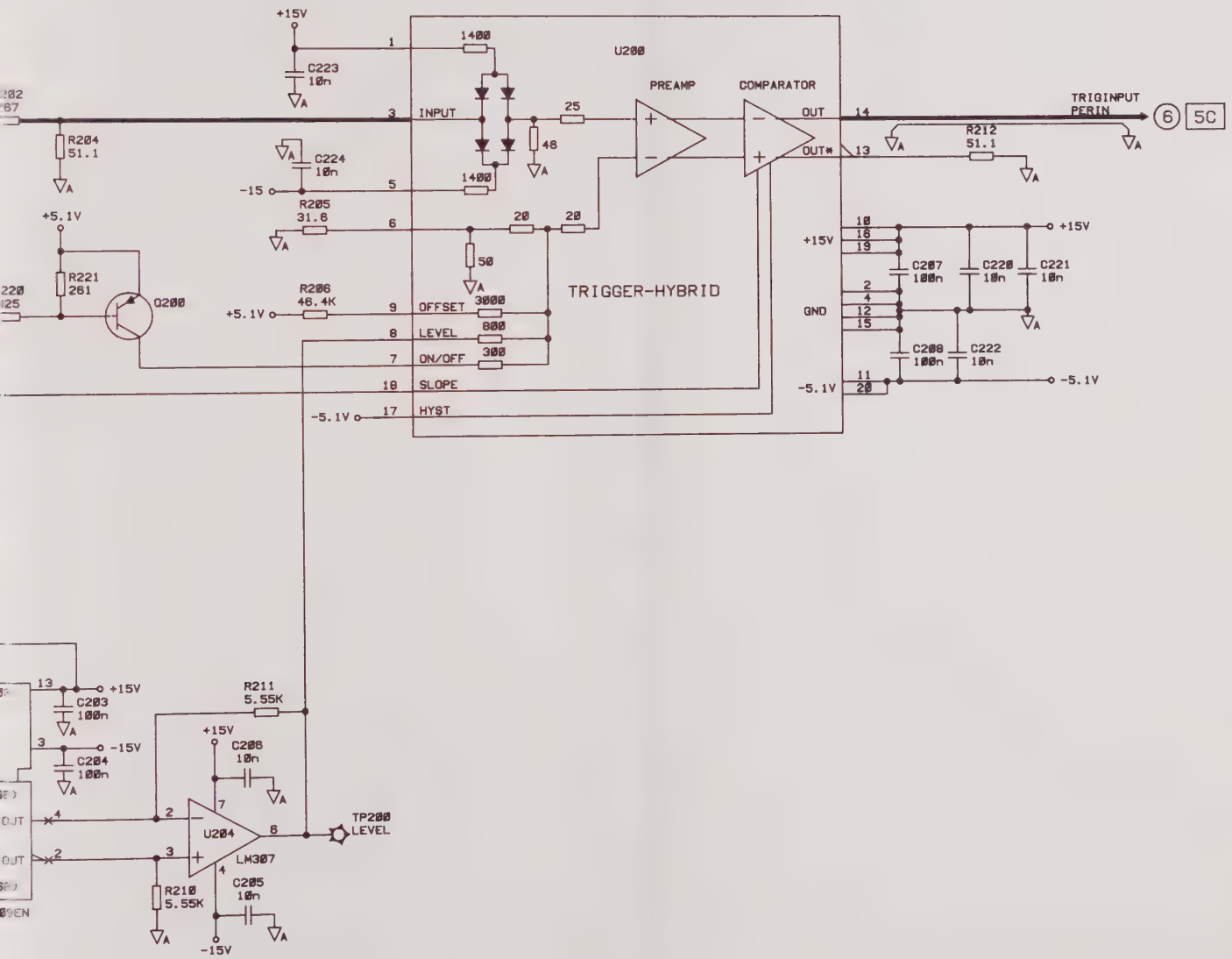

5B

MODEL HP8130A
FIGURE 6.4-17.
OPT.020 TIMING BD SCHEMATICS
(SHEET 2 OF 12)

P/O A5 TIMING BOARD (OPT.020)

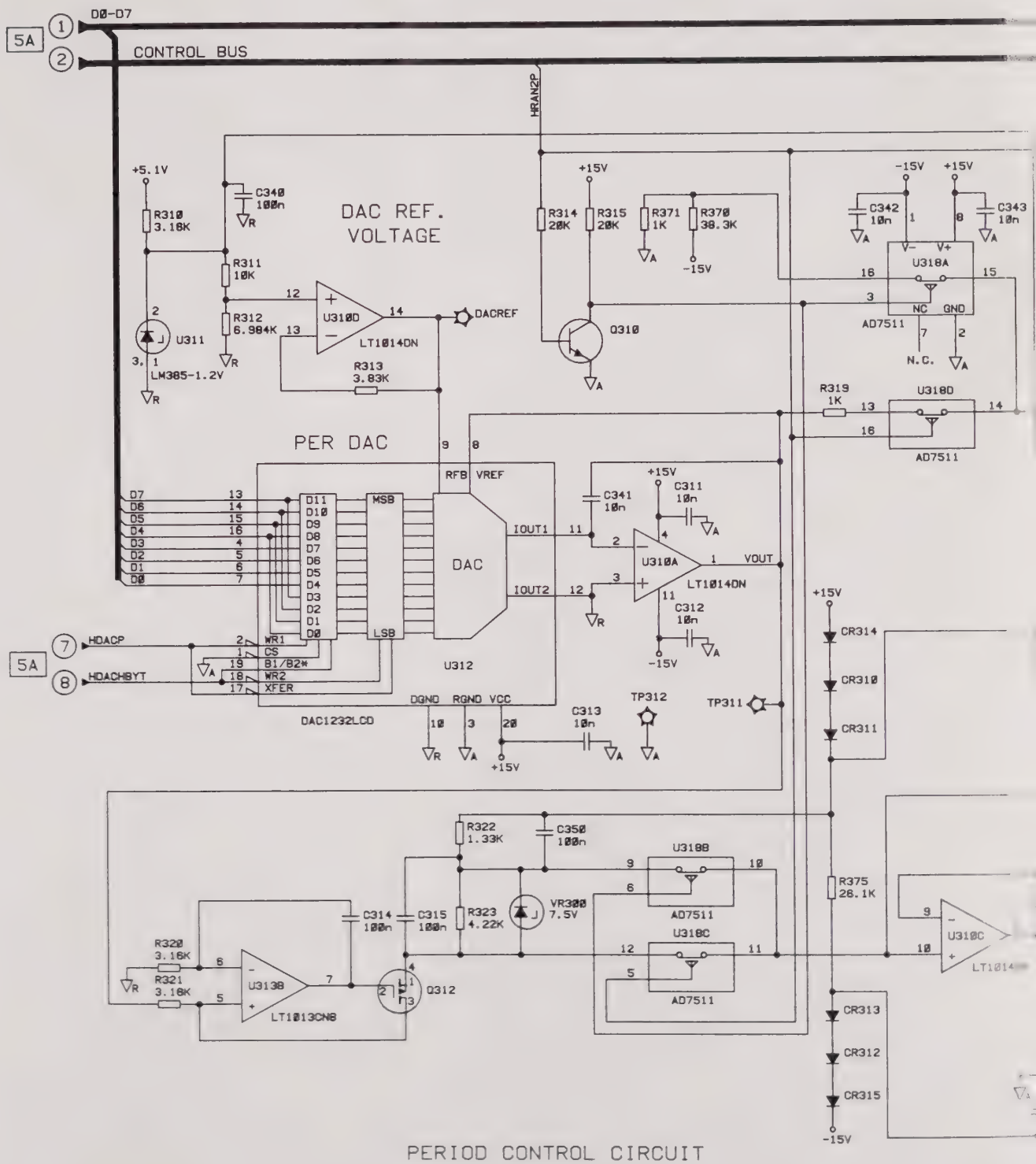

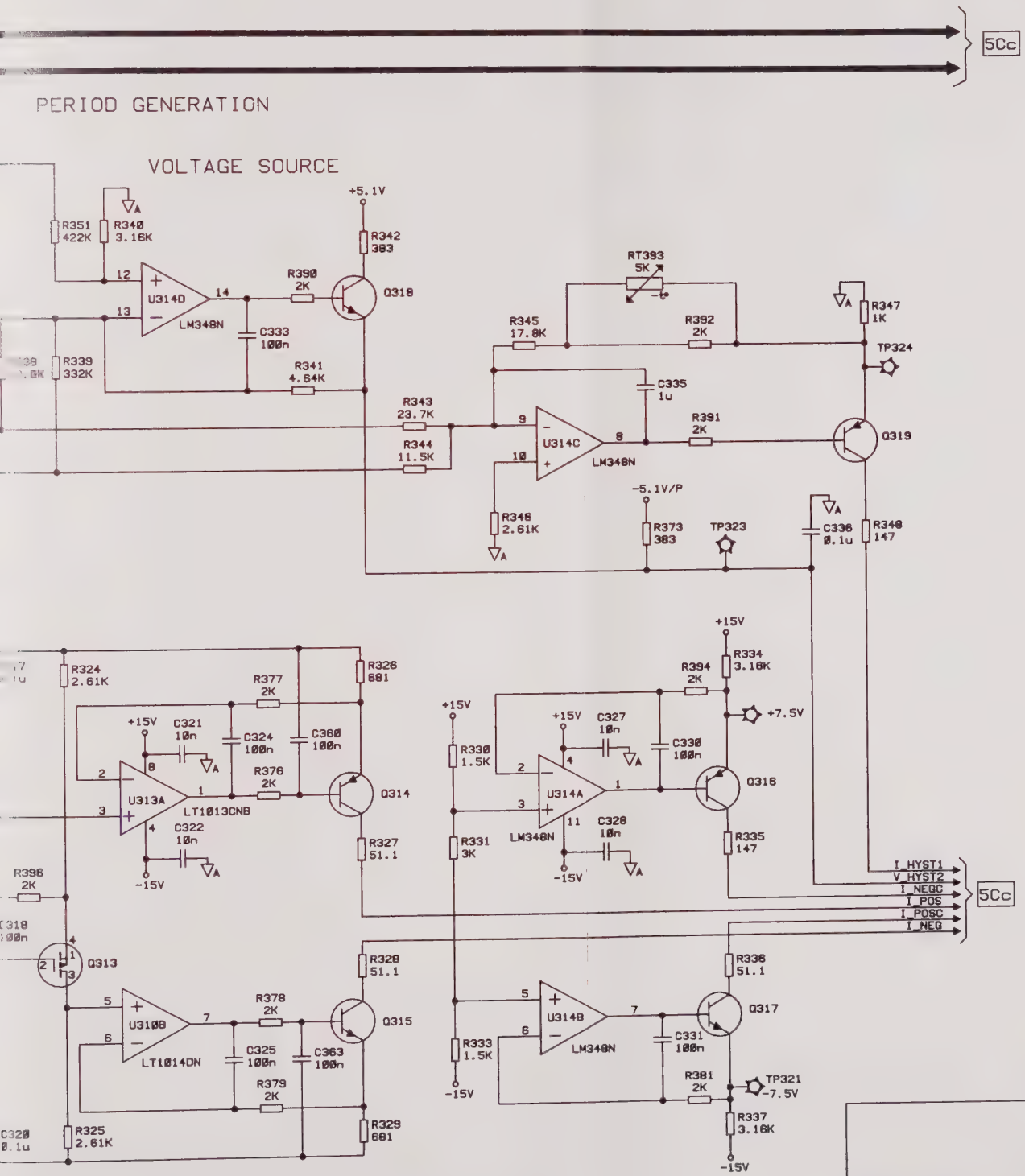

5C

MODEL HP8130A
FIGURE 6.4-18.
OPT.020 TIMING BD SCHEMATICS
(SHEET 3 OF 12)

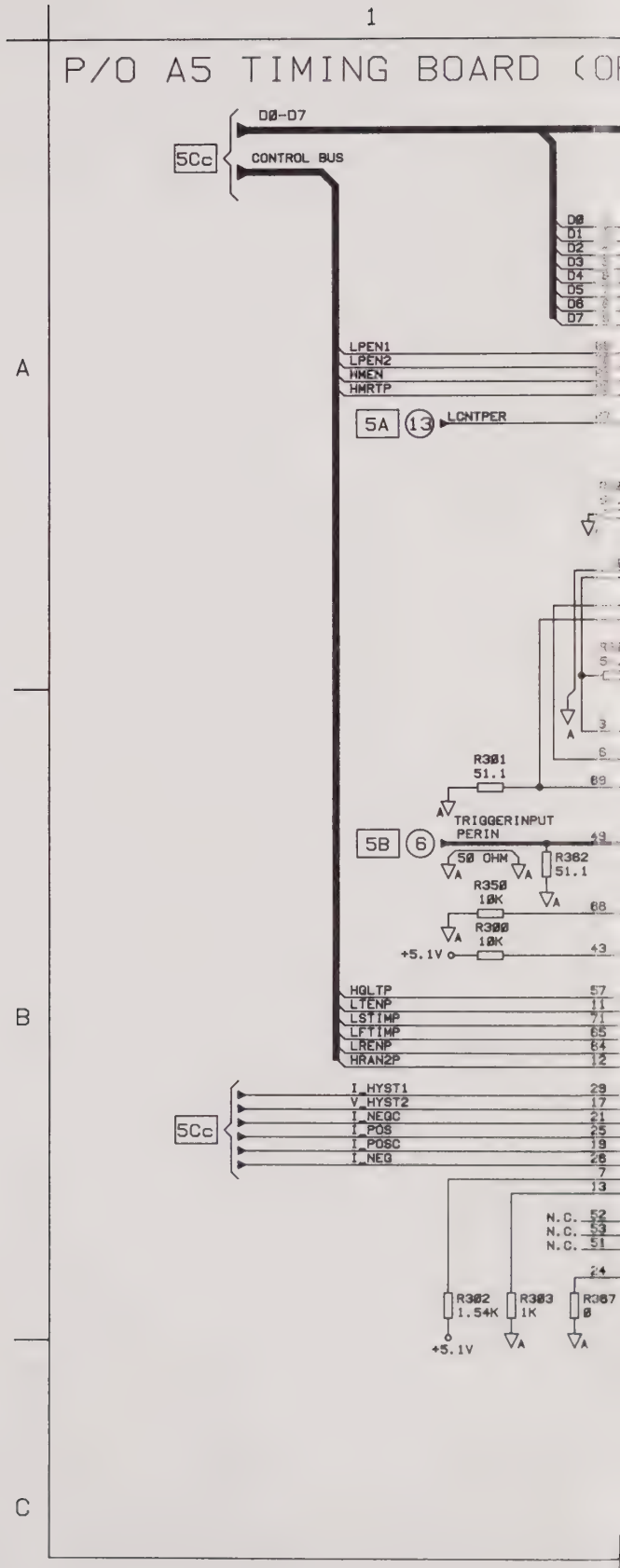
1
P/O A5 TIMING BOARD (OP
A
B
C
D0-D7
5Cc
CONTROL BUS
D0
D1
D2
D3
D4
D5
D6
D7
LPEN1
LPEN2
HMEN
HMRTP
5A
13
LCNTPER
R301
51.1
TRIGGERINPUT
PERIN
5B
6
50 OHM
R302
51.1
R350
10K
R300
10K
+5.1V
HQLTP
LTENP
LSTIMP
LFTIMP
LRENP
HRAN2P
I_HYST1
V_HYST2
I_NEGC
I_POS
I_POSC
I_NEG
5Cc
N.C.
N.C.
N.C.
R302
1.54K
R303
1K
R307
0
+5.1V

T.Ø2Ø)

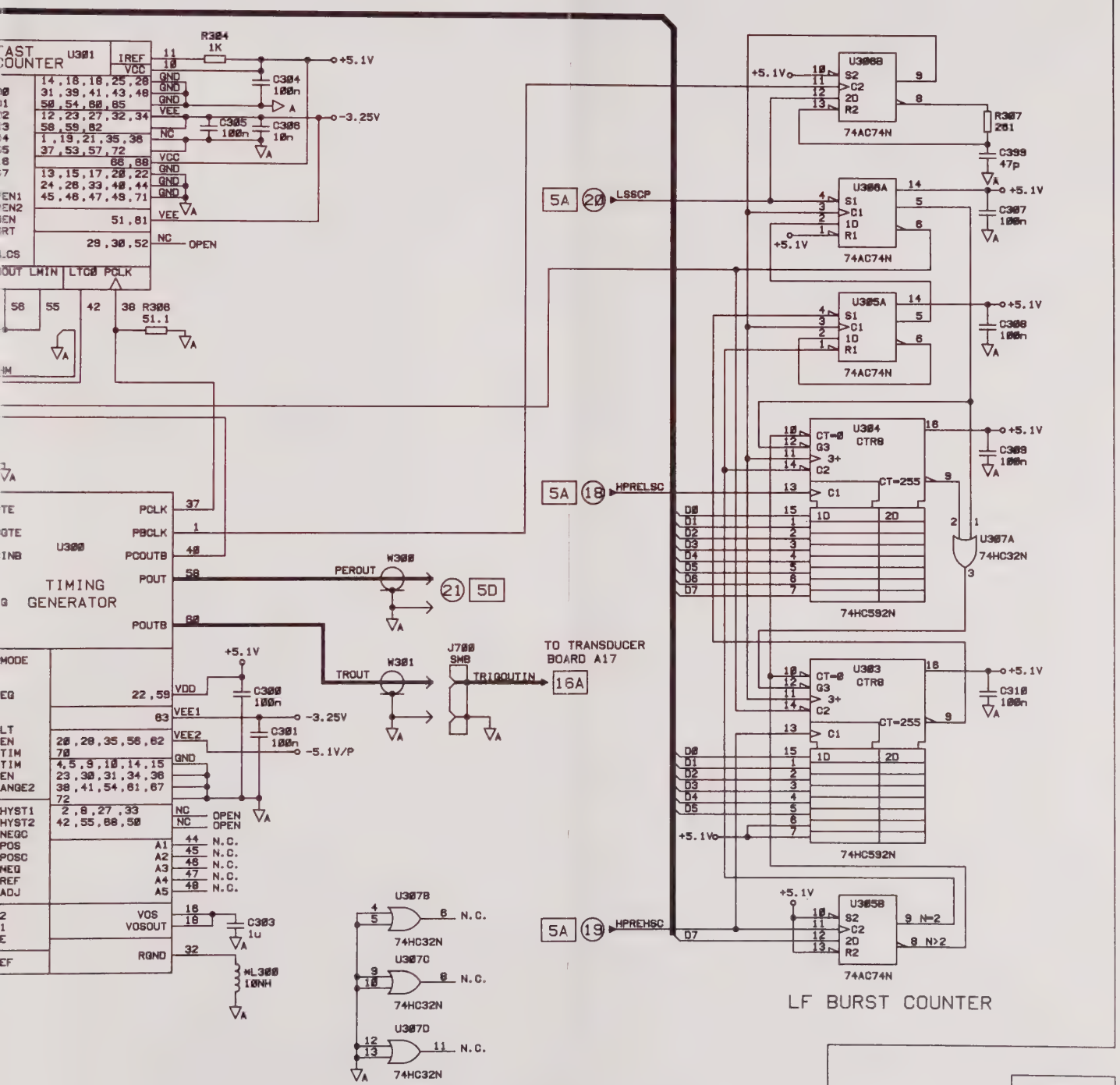

5C

MODEL HP8130A
FIGURE 6.4-19.
OPT.Ø2Ø TIMING BD SCHEMATICS
(SHEET 4 OF 12)

P/O A5 TIMING BOARD (OPT.020)

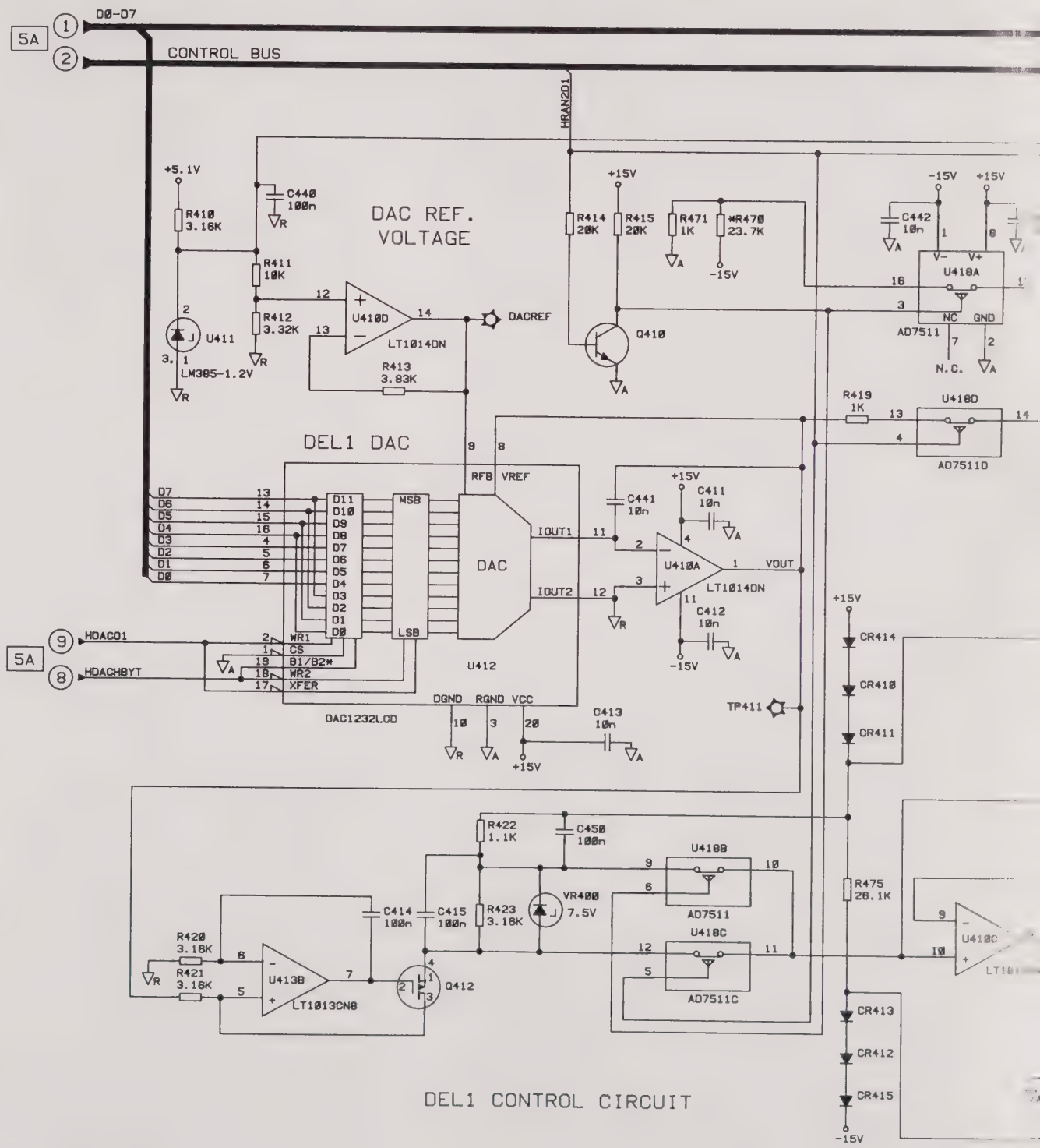

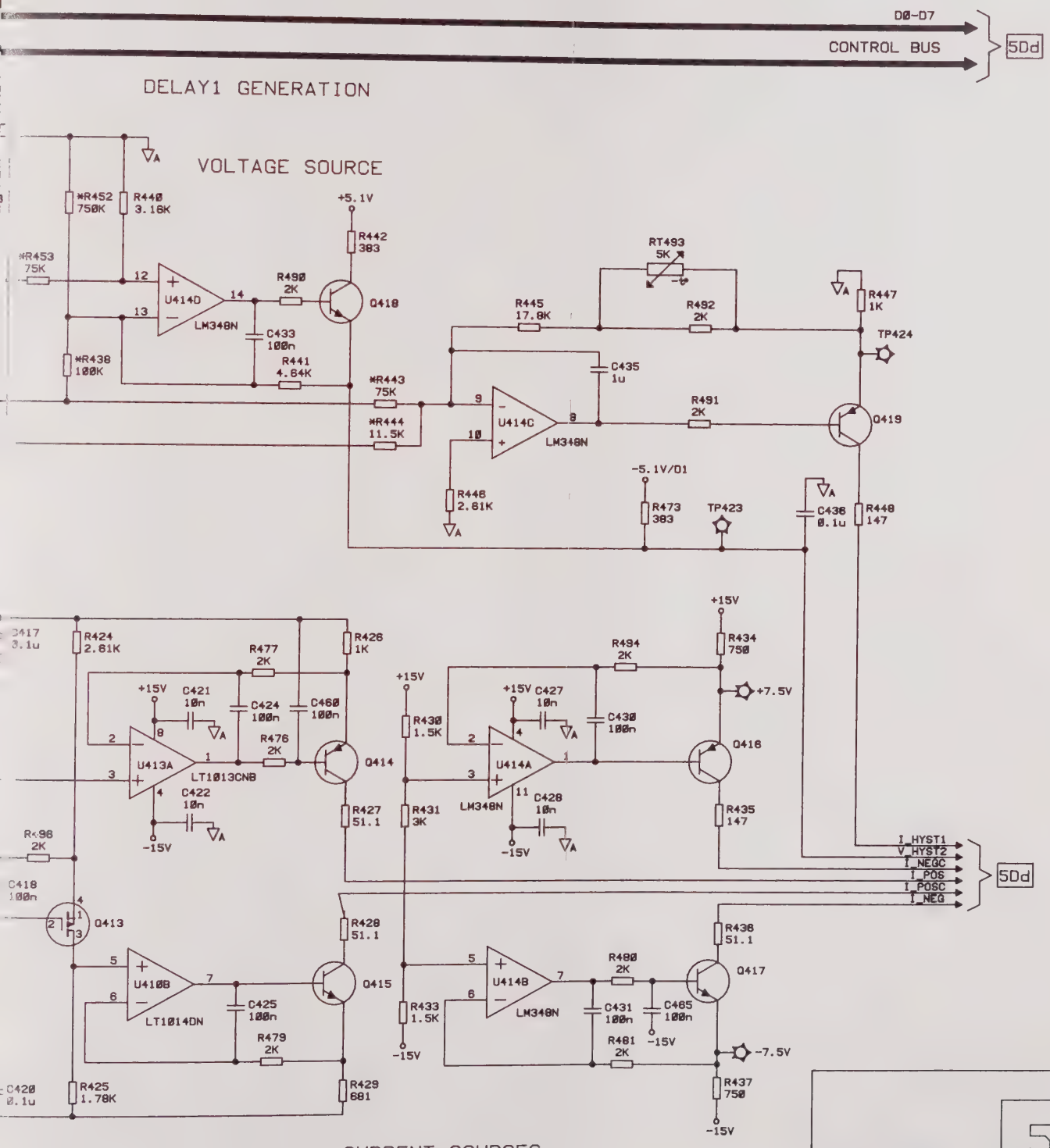

CURRENT SOURCES

MODEL HP8130A
FIGURE 6.4-20.
OPT.020 TIMING BD SCHEMATICS
(SHEET 5 OF 12)

5D

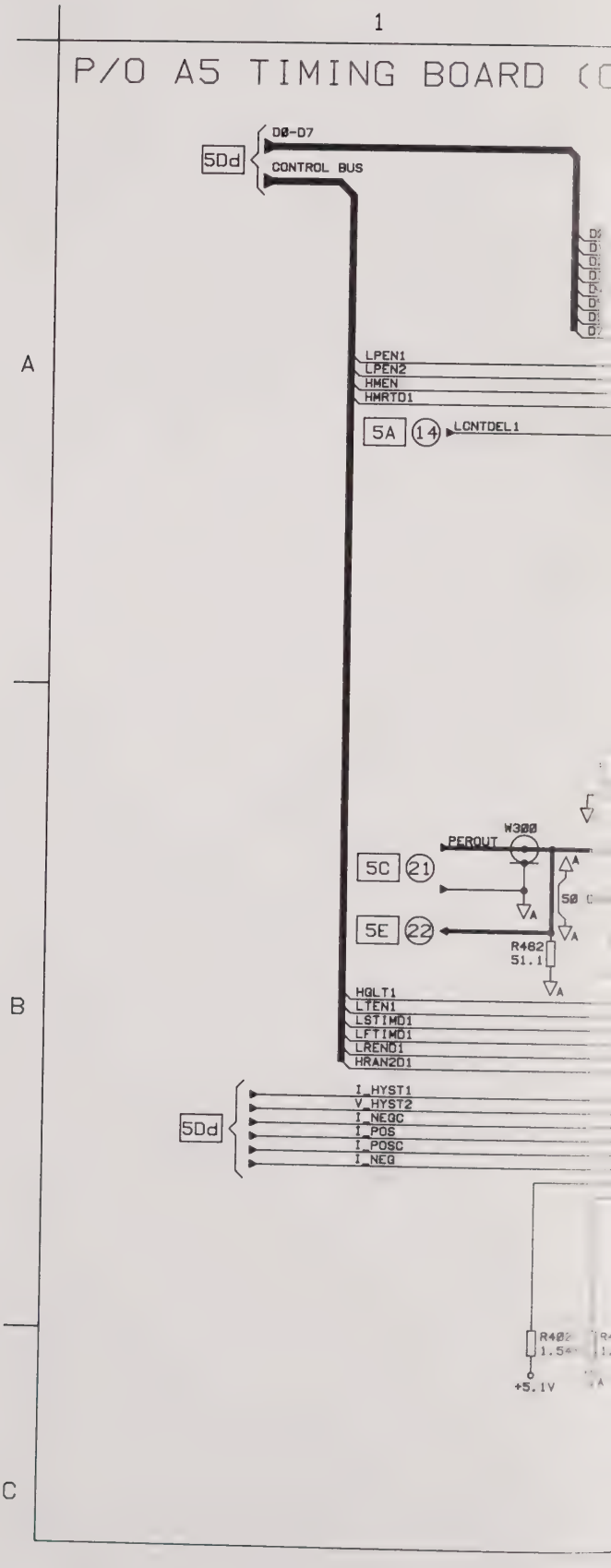
1
P/O A5 TIMING BOARD
A
B
C
D0-D7
5Dd
CONTROL BUS
LPEN1
LPEN2
HMEN
HMRTD1
5A
14
LCNTDEL1
W300
PEROUT
5C
21
5E
22
R402
51.1
HQLT1
LTEN1
LSTIMD1
LFTIMD1
LRENB1
HRAN2D1
I_HYST1
V_HYST2
I_NEGC
I_POS
I_POSC
I_NEG
5Dd
+5.1V

T.020)

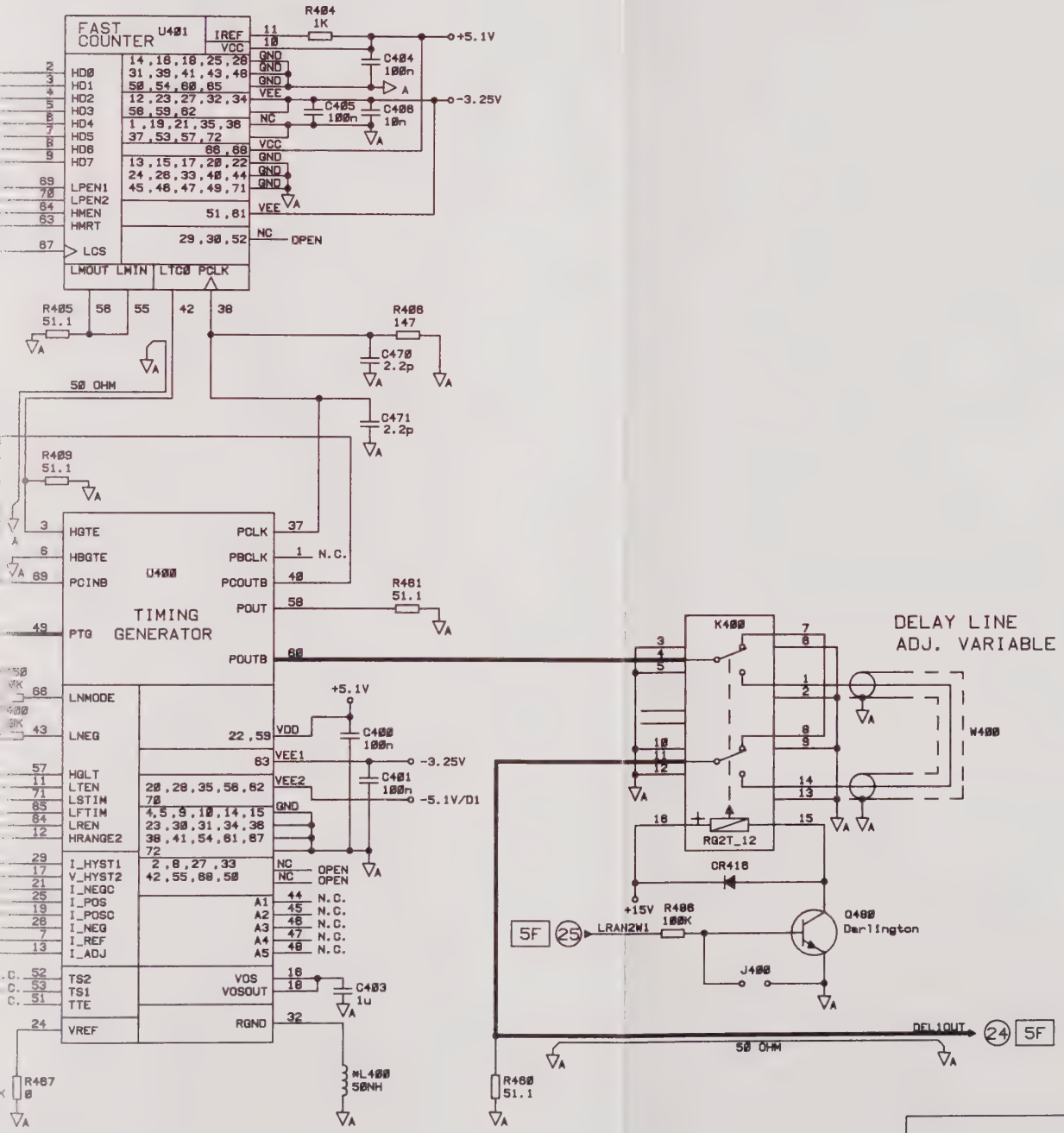

MODEL HP8130A
FIGURE 6.4-21
STANDARD TIMING BD SCHEMATICS
(SHEET 6 OF 12)

5D

P/O A5 TIMING BOARD (OPT.020)

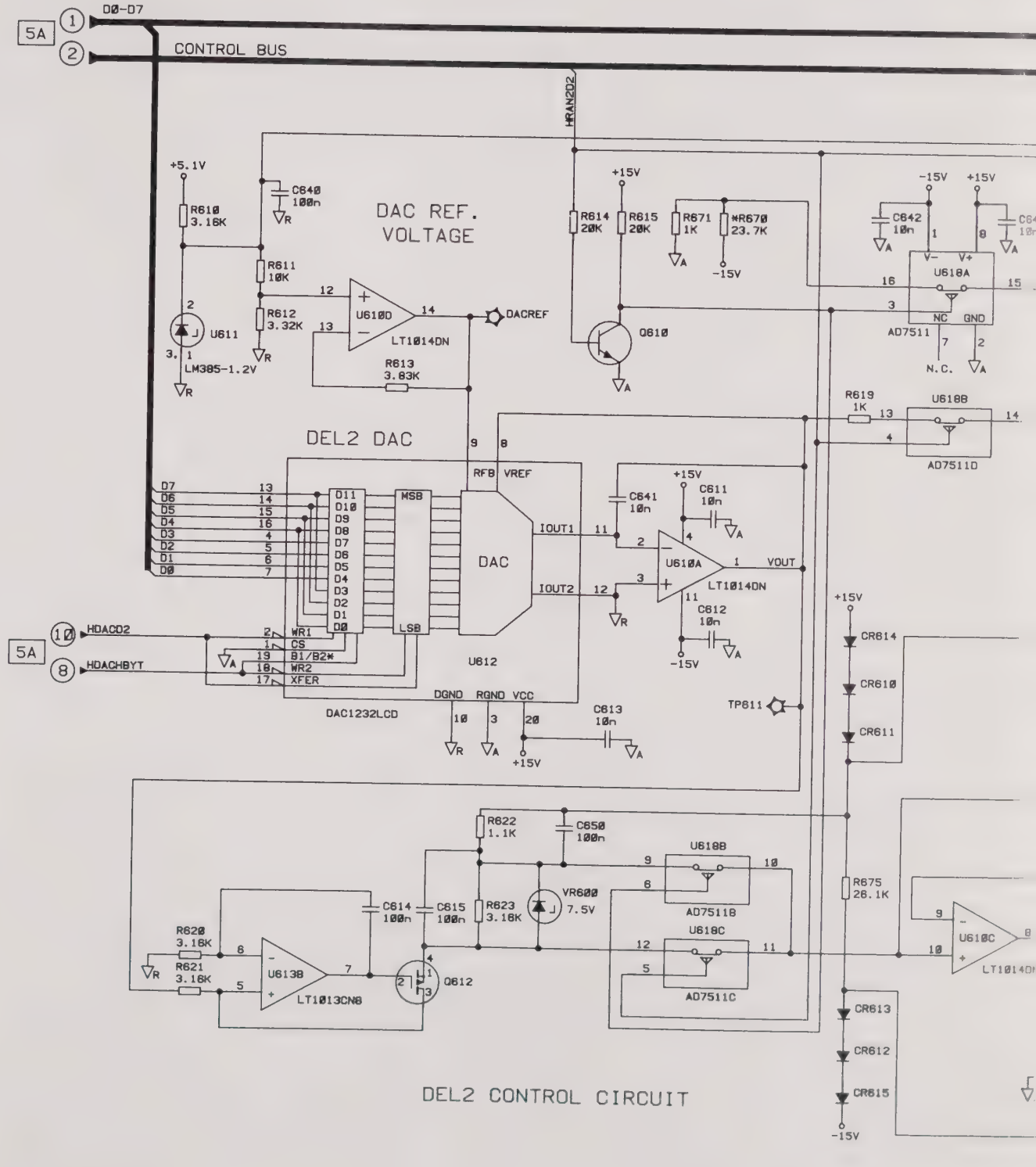

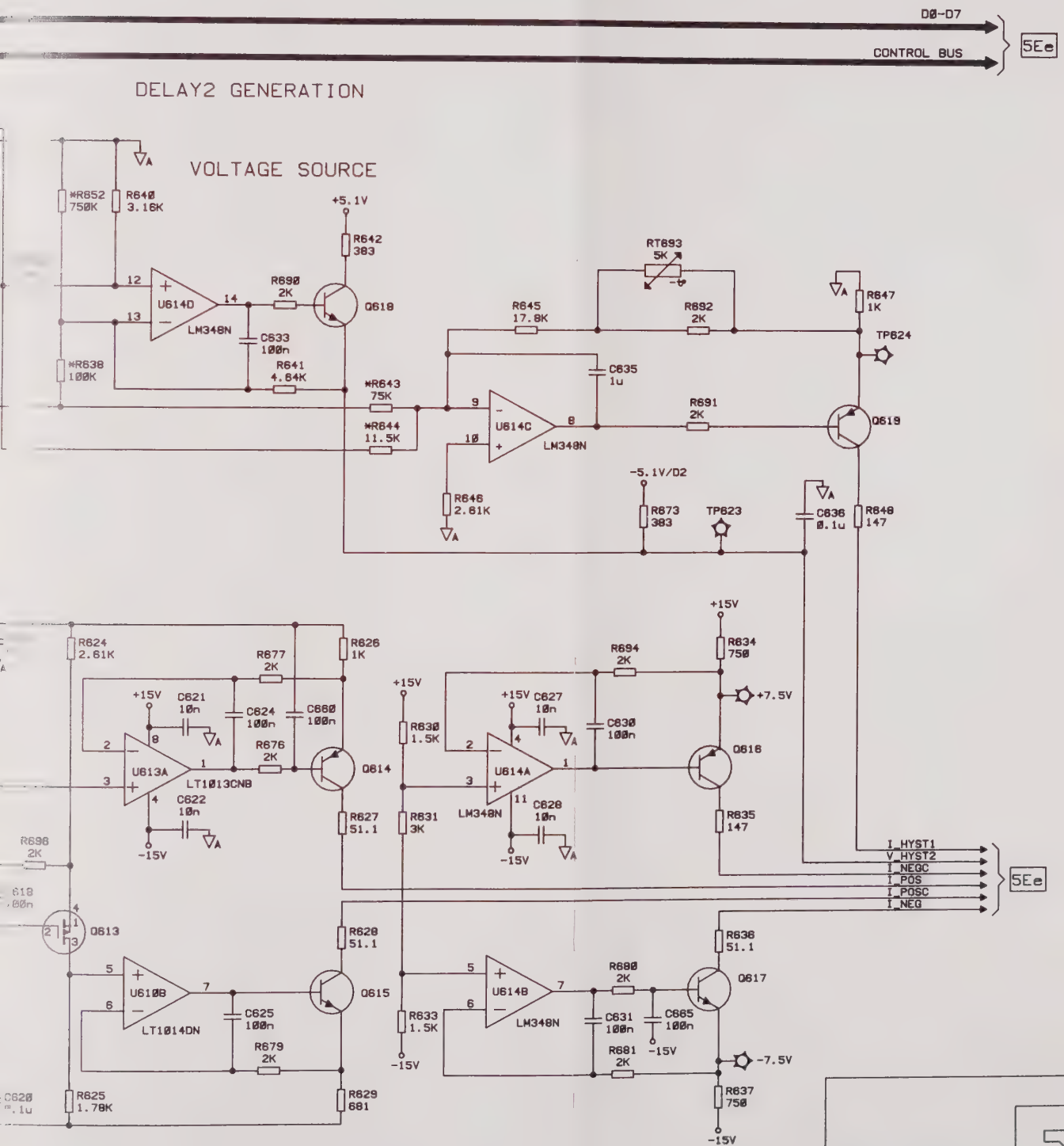

5E

MODEL HP8130A
FIGURE 6.4-22.
OPT.020 TIMING BD SCHEMATICS
(SHEET 7 OF 12)

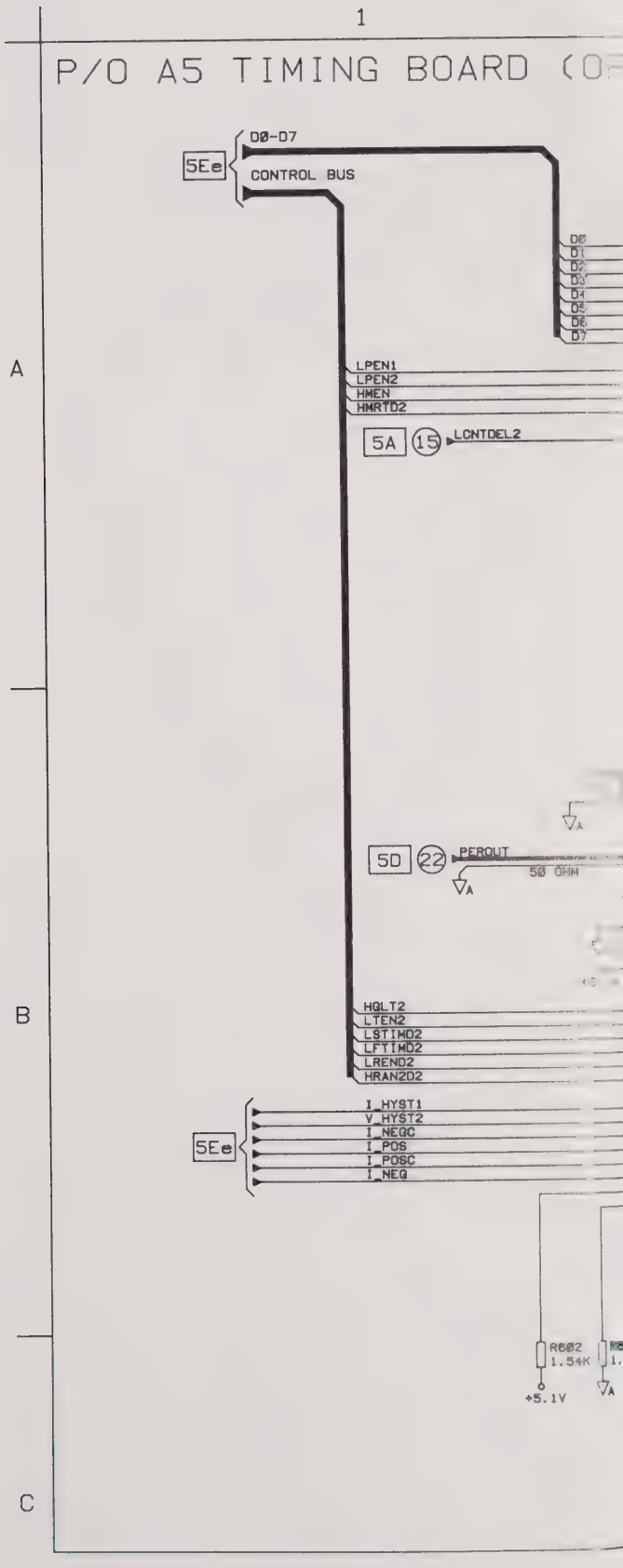
1
P/O A5 TIMING BOARD (O
A
B
C
5Ee
D0-D7
CONTROL BUS
D0
D1
D2
D3
D4
D5
D6
D7
LPEN1
LPEN2
HMEN
HMRTD2
5A
15
LCNTDEL2
5D
22
PEROUT
50 OHM
HBLT2
LTEN2
LSTIMD2
LFTIMD2
LREND2
HRAN2D2
I_HYST1
V_HYST2
I_NEGC
I_POS
I_POSC
I_NEG
R602
1.54K
+5.1V

T.020)

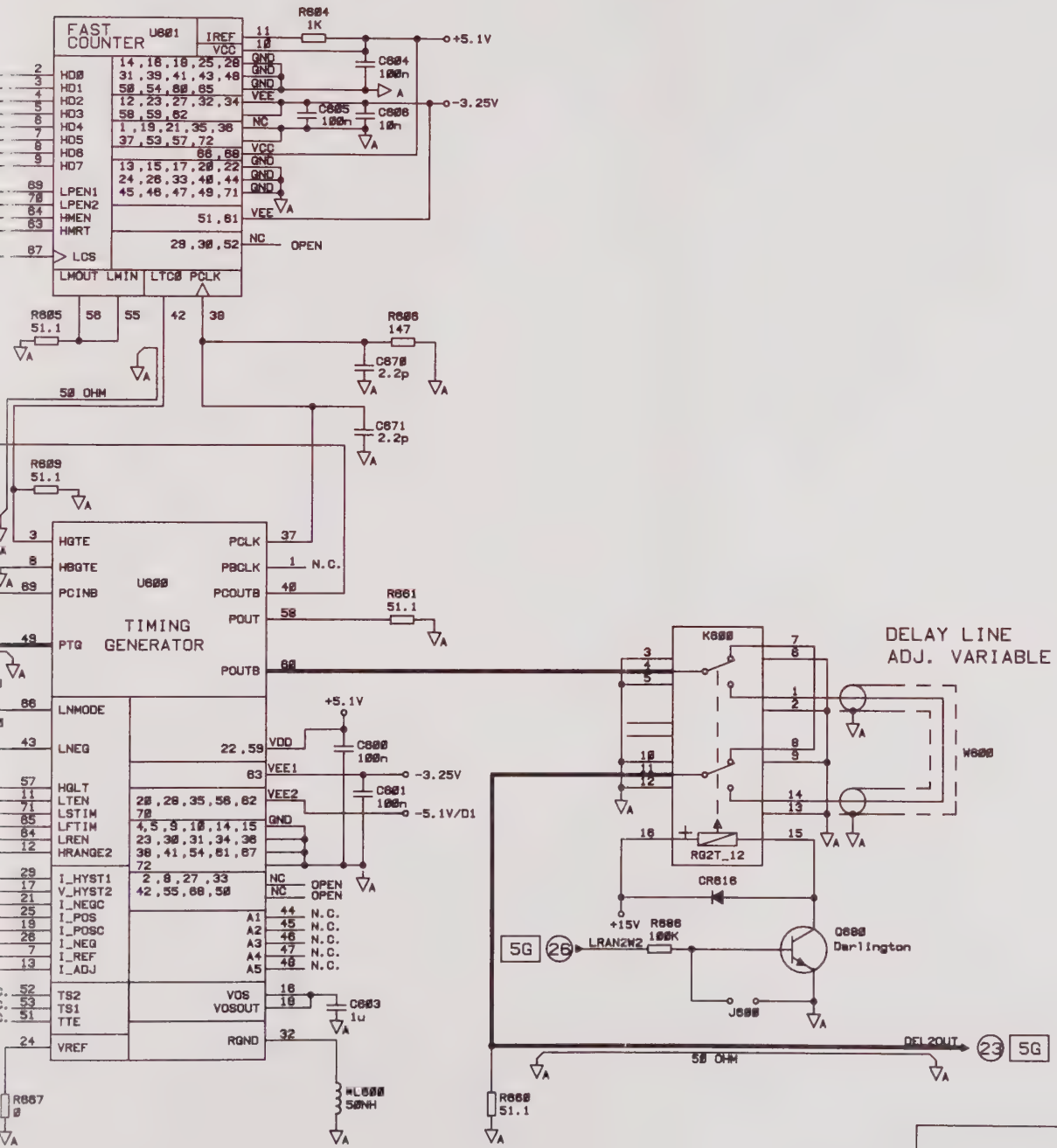

5E

MODEL HP8130A
FIGURE 6.4-23.
OPT.020 TIMING BD SCHEMATICS
(SHEET 9 OF 12)

P/O A5 TIMING BOARD (OPT.020)

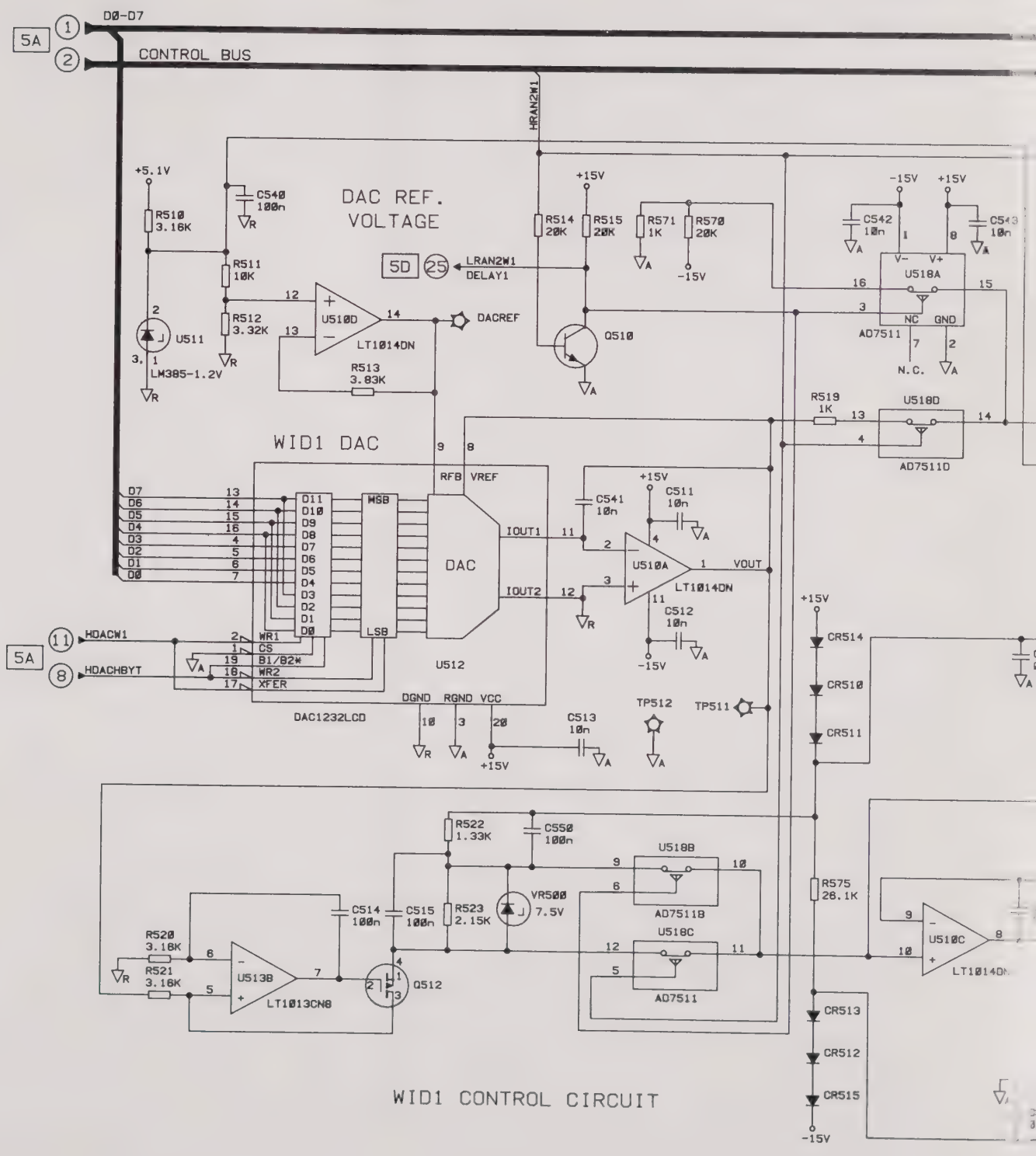

D0-D7
CONTROL BUS
5Ff

WIDTH1 GENERATION

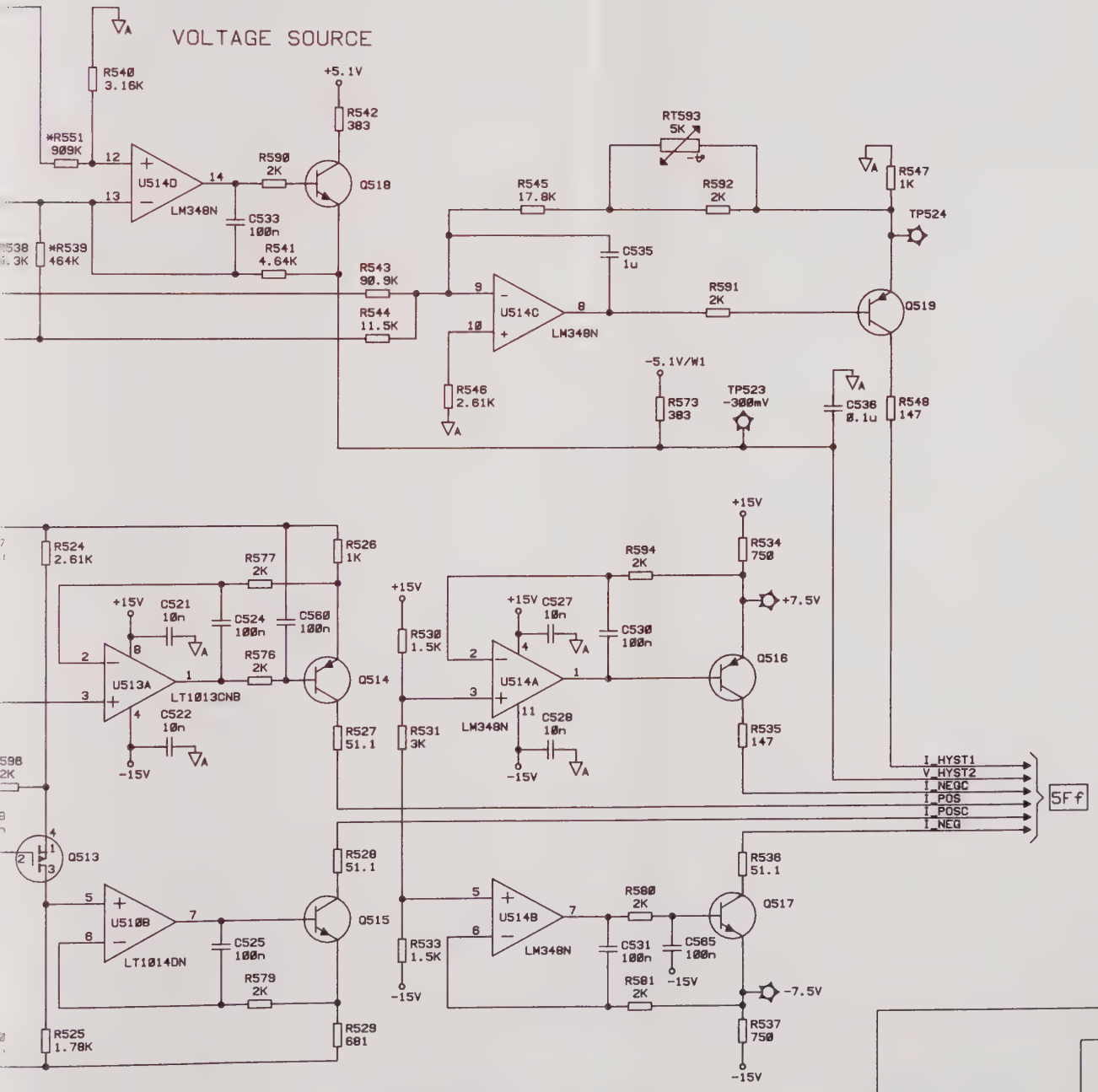

CURRENT SOURCES

5F

MODEL HP8130A
FIGURE 6.4-23.
OPT.020 TIMING BD SCHEMATICS
(SHEET 9 OF 12)
TIMING BOARD (A5)

P/O A5 TIMING BOARD (OPT.020)

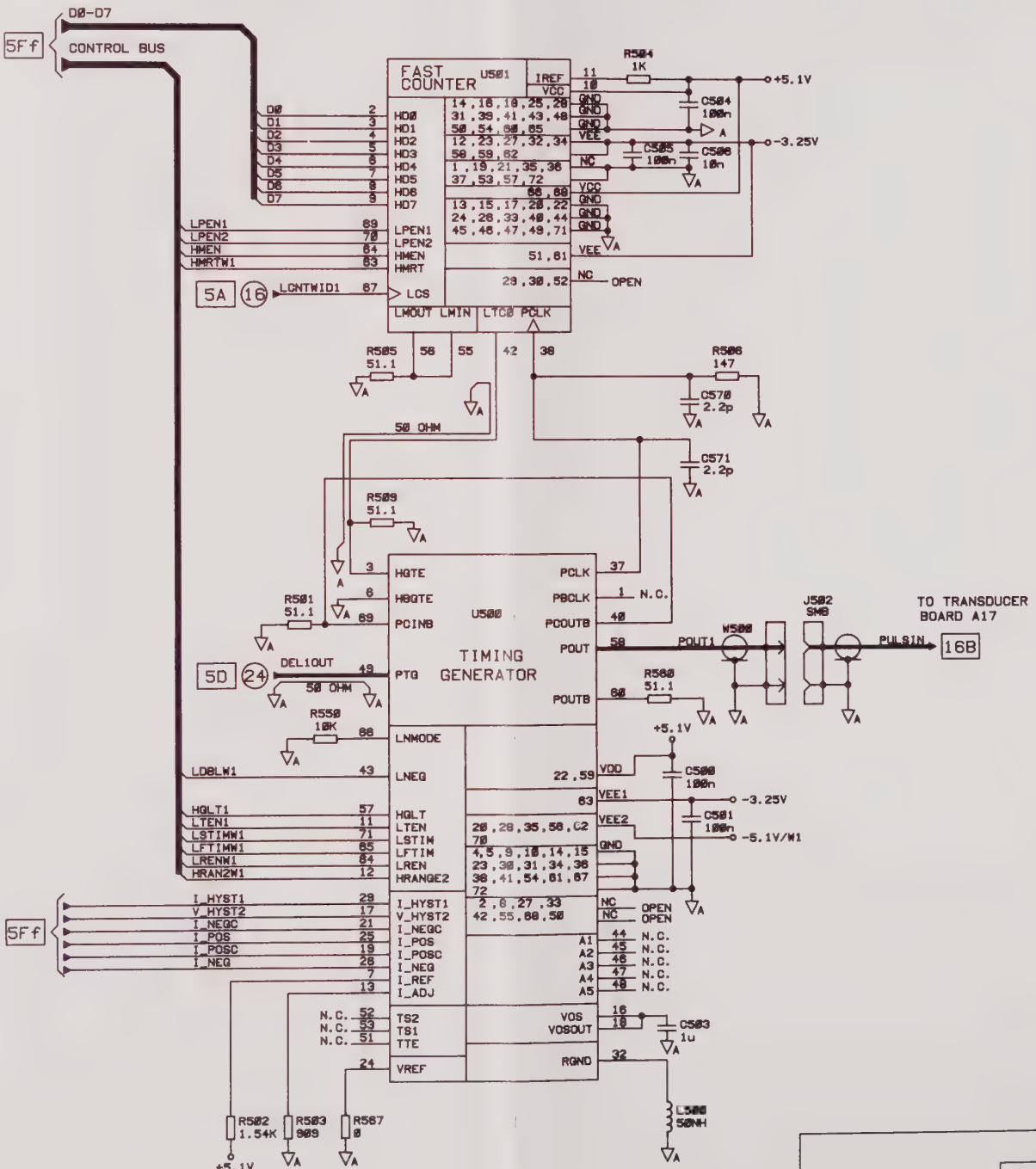

MODEL HP8130A
FIGURE 6.4-25.
OPT.020 TIMING BD SCHEMATICS
(SHEET 10 OF 12)

5F

P/O A5 TIMING BOARD (OPT.020)

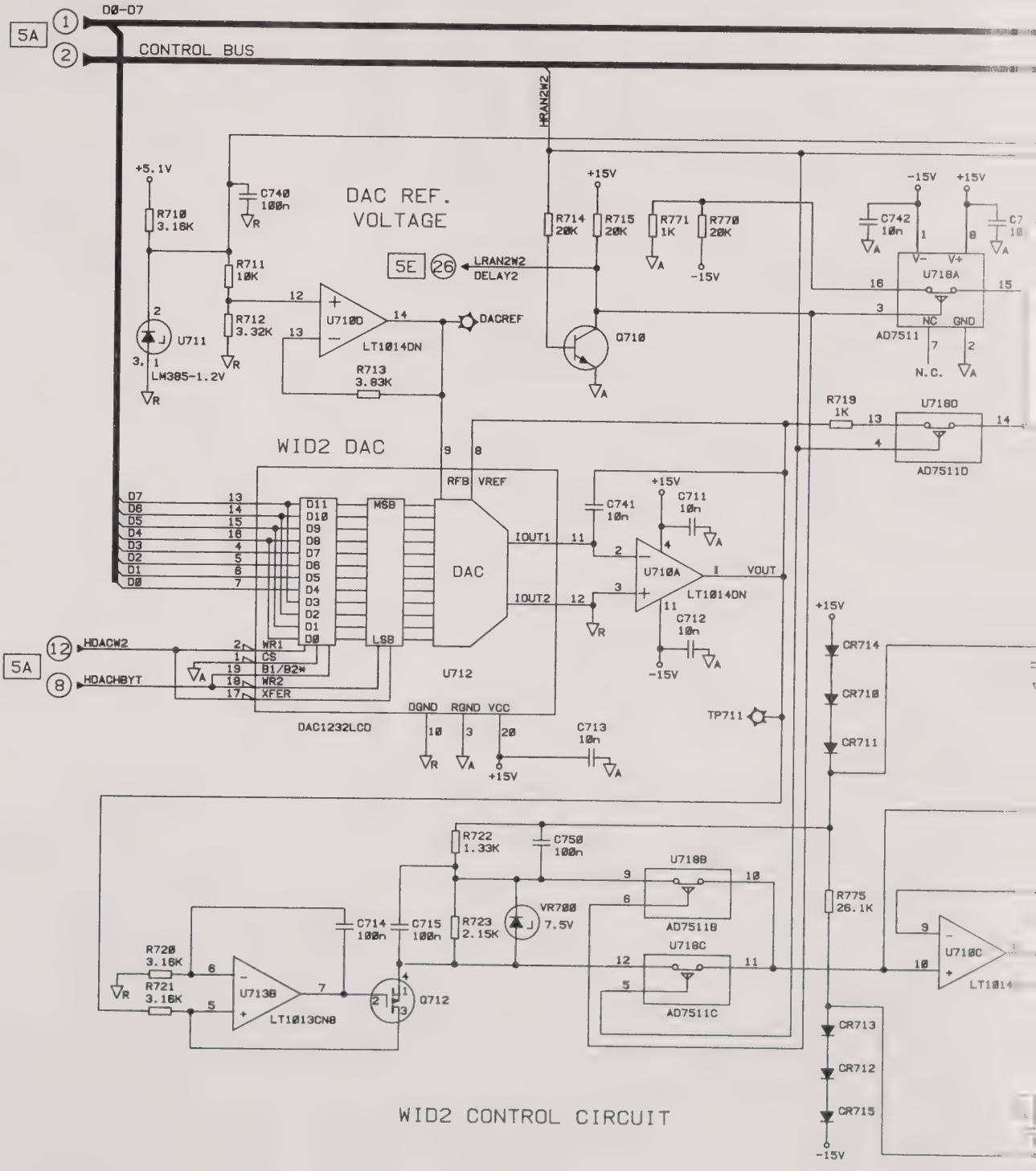

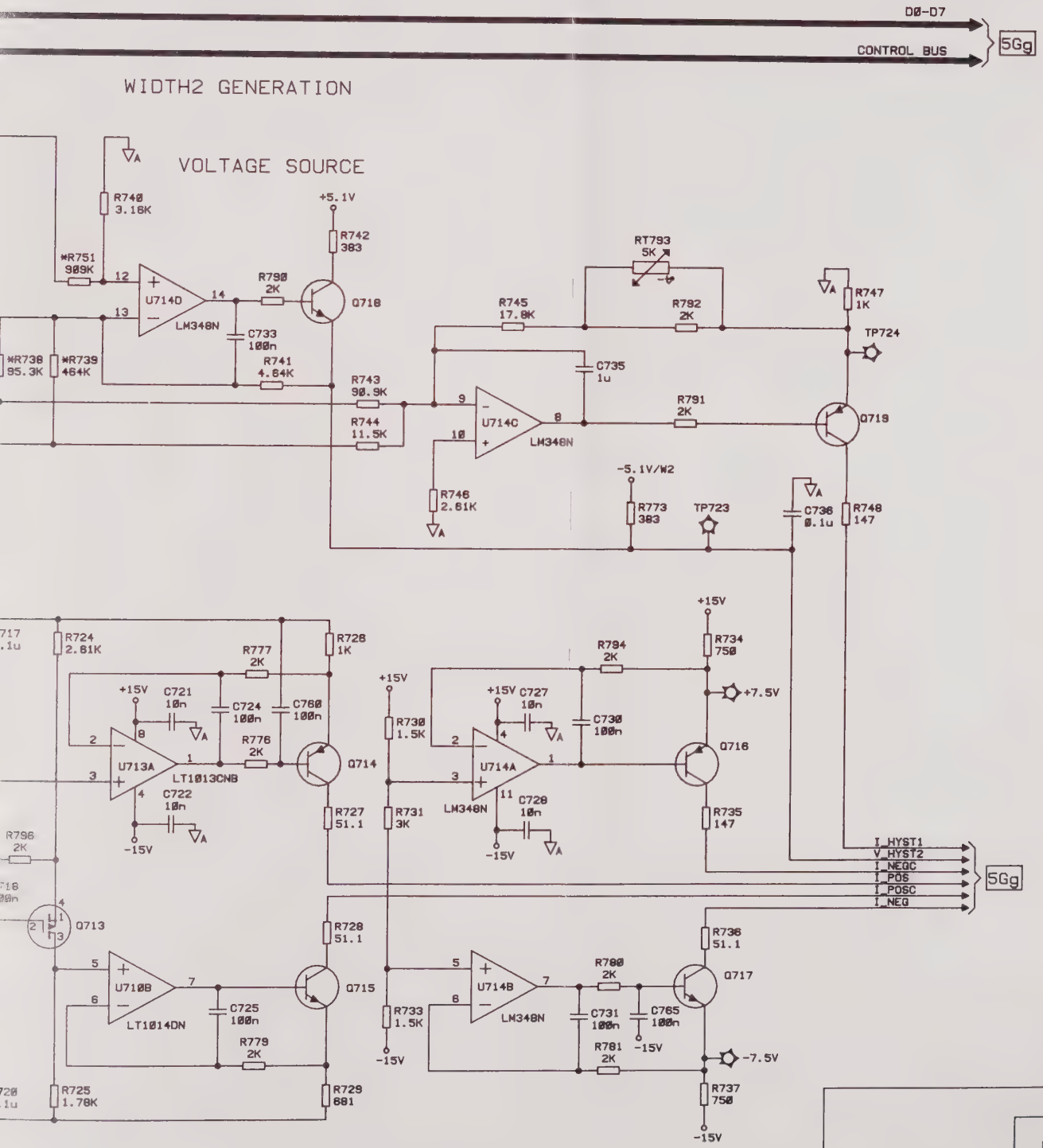

5G

MODEL HP8130A
FIGURE 6.4-26.
OPT.020 TIMING BD SCHEMATICS
(SHEET 11 OF 12)

?/O A5 TIMING BOARD (OPT.Ø2Ø)

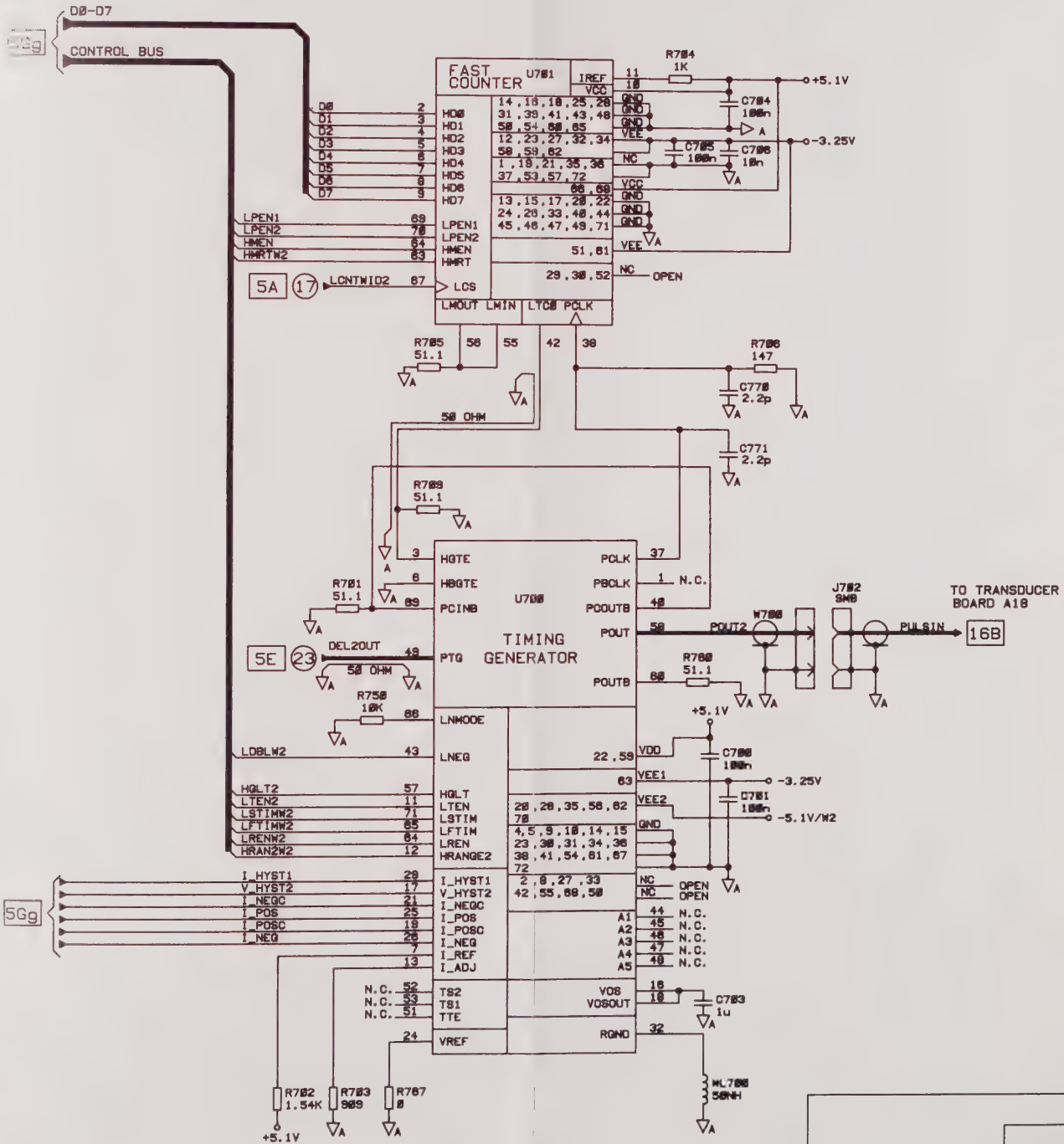

MODEL HP8130A
FIGURE 6.4-27.
OPT.Ø2Ø TIMING BD SCHEMATICS
(SHEET 12 OF 12)

5G

A5 BD AY TIMING

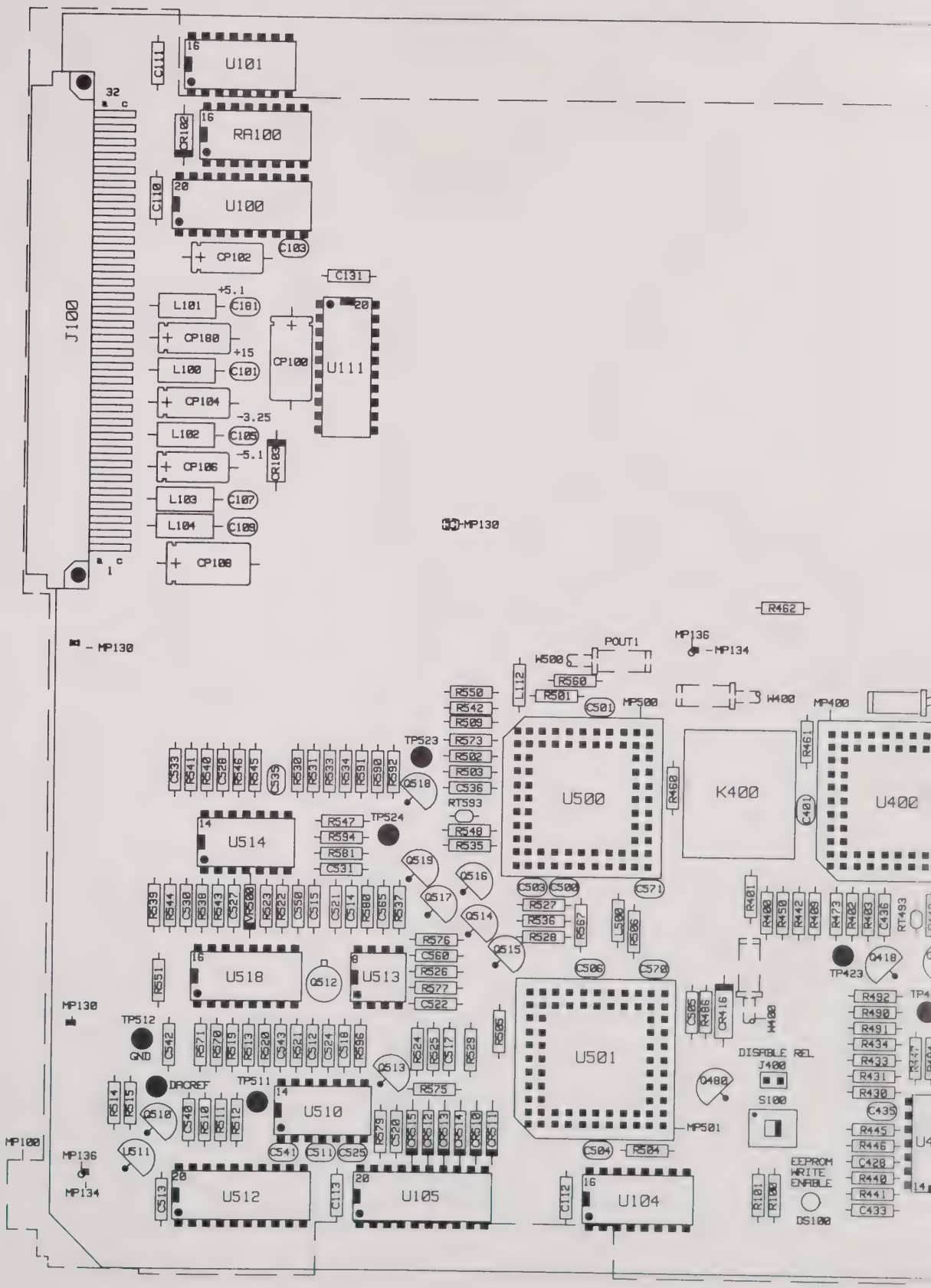

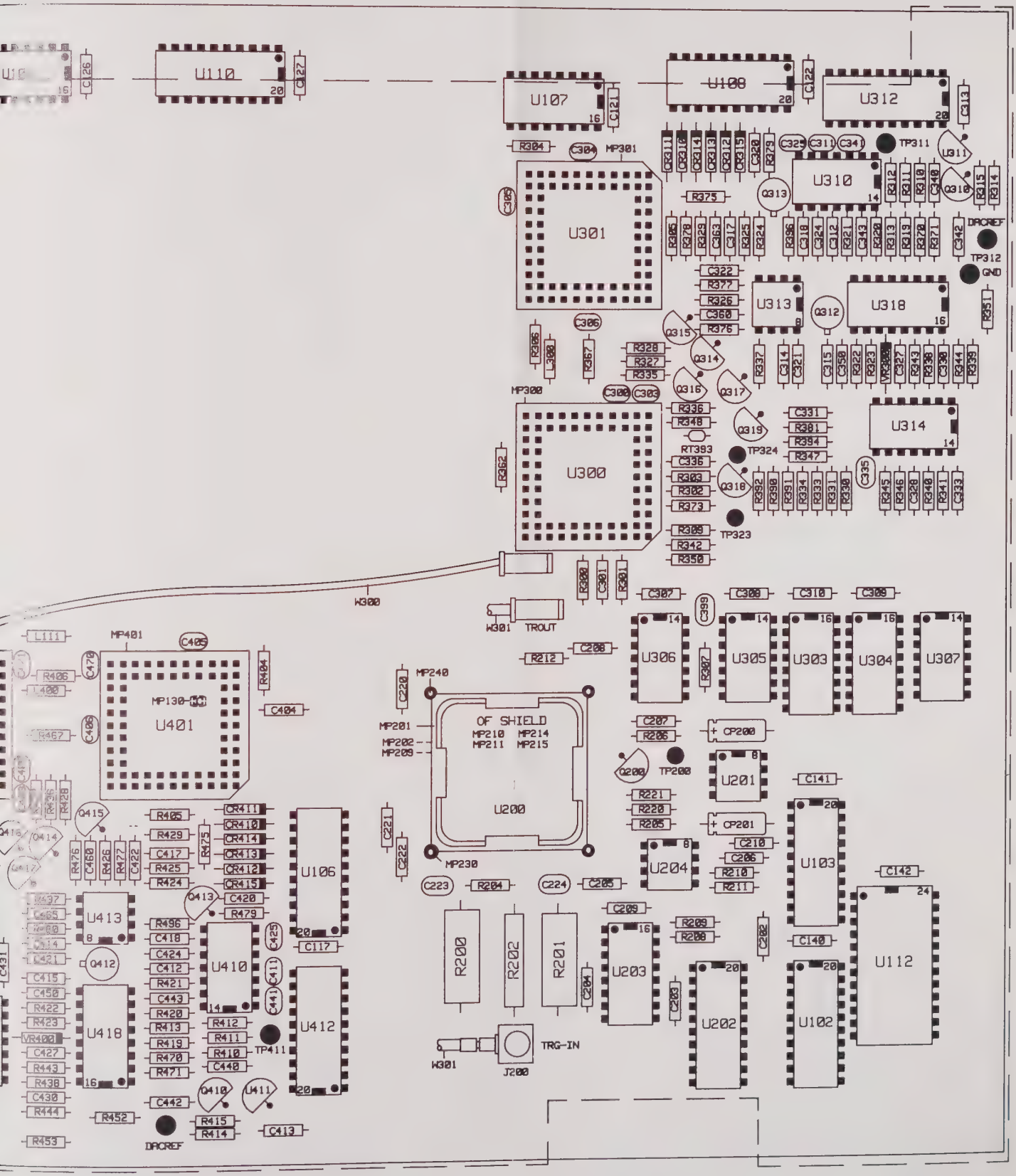

MODEL HP8131A
STANDARD TIMING BOARD
COMPONENT LAYOUT

FIGURE 6.4-28.

REF. DES.	GRID LOC.	REF. DES.	GRID LOC.
C101	A1	C324	D1
C103	A1	C325	D1
C105	A1	C327	D1
C107	A2	C328	D2
C109	A2	C330	D1
C110	A1	C331	D1
C111	A1	C333	D2
C112	B3	C335	D2
C113	A3	C336	D2
C117	C3	C340	D1
C121	C1	C341	D1
C122	D1	C342	D1
C126	B1	C343	D1
C127	C1	C350	D1
C131	A1	C360	D1
C140	D3	C363	D1
C141	D2	C399	D2
C142	D2	C400	B2
C181	A1	C401	B2
C202	D3	C403	B2
C203	D3	C404	C2
C204	C3	C405	C2
C205	C2	C406	B2
C206	D2	C411	C3
C207	D2	C412	C3
C208	C2	C413	C3
C209	C2	C414	B3
C210	D2	C415	B3
C220	C2	C417	C2
C221	C2	C418	C3
C222	C2	C420	C2
C223	C2	C421	B3
C224	C2	C422	C2
C300	C1	C424	C3
C301	C2	C425	C3
C303	C1	C427	B3
C304	C1	C428	B3
C305	C1	C430	B3
C306	C1	C431	B3
C307	D2	C433	B3
C308	D2	C435	B3
C309	D2	C436	B2
C310	D2	C440	C3
C311	D2	C441	C3
C312	D1	C442	C3
C313	D1	C443	C3
C314	D1	C450	B3
C315	D1	C460	B2
C317	D1	C465	B2
C318	D1	C470	B2
C320	D1	C471	B2
C321	D1	C500	B2
C322	D1	C501	B2

REF. DES.	GRID LOC.
503	B2
504	B3
505	B2
506	B2
511	A3
512	A3
513	A3
514	A2
515	A2
517	A3
518	A3
520	A3
521	A2
522	A2
524	A3
525	A3
527	A2
528	A2
530	A2
531	A2
533	A2
535	A2
536	A2
540	A3
541	A3
542	A3
543	A3
550	A2
560	A2
565	A2
570	B2
571	B2
P100	A1
P102	A1
P104	A1
P106	A2
P108	A2
P180	A1
P200	D2
P201	D2
R102	A1
R103	A1
R310	D1
R311	D1
R312	D1
R313	D1
R314	D1
R315	D1
R410	C2
R411	C2
R412	C2
R413	C2
R414	C2
R415	C2
R416	B2

REF. DES.	GRID LOC.
CR510	A3
CR511	A3
CR512	A3
CR513	A3
CR514	A3
CR515	A3
DS100	B3
J100	A1
J200	C3
J400	B3
K400	B2
L100	A1
L101	A1
L102	A1
L103	A2
L104	A2
L110	C2
L111	B2
L112	B2
L300	C1
L400	B2
L500	B2
MP100	A3
MP130	A2
MP134	B2
MP136	B2
MP201	C2
MP202	C2
MP209	C2
MP210	C2
MP211	C2
MP214	C2
MP215	C2
MP230	C2
MP240	C2
MP300	C1
MP301	C1
MP400	B2
MP401	B2
MP500	B2
MP501	B3
Q200	C2
Q310	D1
Q312	D1
Q313	D1
Q314	D1
Q315	D1
Q316	D1
Q318	D2
Q319	D2
Q410	C3
Q412	B3
Q413	C2
Q414	B2
Q415	B2
Q416	B2

REF. DES.	GRID LOC.
Q417	B2
Q418	B2
Q419	B2
Q480	B3
Q510	A3
Q512	A2
Q513	A3
Q514	A2
Q515	A2
Q516	A2
Q517	A2
Q518	A2
Q519	A2
R100	B3
R101	B3
R200	C3
R201	C3
R202	C3
R204	C2
R205	D2
R206	D2
R208	D3
R209	D3
R210	D2
R211	D2
R212	C2
R220	D2
R221	D2
R300	C2
R301	C2
R302	D2
R303	D2
R304	C1
R305	D1
R306	C1
R307	D2
R309	D2
R310	D1
R311	D1
R312	D1
R313	D1
R314	D1
R315	D1
R319	D1
R320	D1
R321	D1
R322	D1
R323	D1
R324	D1
R325	D1
R326	D1
R327	C1
R328	C1
R329	D1
R330	D2
R331	D2

REF. DES.	GRID LOC.
R333	D2
R334	D2
R335	C1
R336	D1
R337	D1
R338	D1
R339	D1
R340	D2
R341	D2
R342	D2
R343	D1
R344	D1
R345	D2
R346	D2
R347	D2
R348	D2
R350	D2
R351	D1
R362	C2
R367	C1
R370	D1
R371	D1
R373	D2
R375	D1
R376	D1
R377	D1
R378	D1
R379	D1
R381	D2
R390	D2
R391	D2
R392	D2
R394	D2
R396	D1
R400	B2
R401	B2
R402	B2
R403	B2
R404	C2
R405	C2
R406	B2
R409	B2
R410	C3
R411	C3
R412	C3
R413	C3
R414	C3
R415	C3
R419	C3
R420	C3
R421	C3
R422	B3
R423	B3
R424	C2
R425	C2
R426	B2
R427	B2
R428	B2

REF. DES.	GRID LOC.
R429	C2
R430	B3
R431	B3
R433	B3
R434	B3
R435	B2
R436	B2
R437	B2
R438	B3
R440	B3
R441	B3
R442	B2
R443	B3
R444	B3
R445	B3
R446	B3
R447	B3
R448	B2
R450	B2
R452	B3
R453	B3
R460	B2
R461	B2
R462	B2
R467	B2
R470	C3
R471	C3
R473	B2
R475	B2
R476	B2
R477	B2
R479	C2
R480	B3
R481	B3
R486	B2
R490	B2
R491	B3
R492	B2
R494	B3
R496	C2
R501	B2
R502	A2
R503	A2
R504	B3
R505	A3
R506	B2
R509	A2
R510	A3
R511	A3
R512	A3
R513	A3
R514	A3
R515	A3
R519	A3
R520	A3
R521	A3
R522	A2
R523	A2
R524	A3
R525	A3

REF. DES.	GRID LOC.
R526	A2
R527	B2
R528	B2
R529	A3
R530	A2
R531	A2
R533	A2
R534	A2
R535	A2
R536	B2
R537	A2
R538	A2
R539	A2
R540	A2
R541	A2
R542	A2
R543	A2
R544	A2
R545	A2
R546	A2
R547	A2
R548	A2
R550	A2
R551	A2
R560	B2
R567	B2
R570	A3
R571	A3
R573	A2
R575	A3
R576	A2
R577	A2
R579	A3
R580	A2
R581	A2
R590	A2
R591	A2
R592	A2
R594	A2
R596	A3
RA100	A1
RT393	D2
RT493	B2
RT593	A2
RT693	B1
RT793	C2
S100	B3
TP200	D2
TP311	D1
TP312	D1
TP323	D2
TP324	D2
TP411	C3
TP423	B2
TP424	B2
TP511	A3
TP512	A3

REF. DES.	GRID LOC.
TP523	A2
TP524	A2
U100	A1
U101	A1
U102	D3
U103	D2
U104	B3
U105	A3
U106	C2
U107	C1
U108	C1
U109	B1
U110	C1
U111	A1
U112	D3
U200	C2
U201	D2
U202	D3
U203	C3
U204	D2
U300	C2
U301	C1
U303	D2
U304	D2
U305	D2
U306	D2
U307	D2
U310	D1
U311	D1
U312	D1
U313	D1
U314	D2
U318	D1
U400	B2
U401	C2
U410	C3
U411	C3
U412	C3
U413	B2
U414	B3
U418	B3
U500	B2
U501	B3
U510	A3
U511	A3
U512	A3
U513	A2
U514	A2
U518	A2
VR300	D1
VR400	B3
VR500	A2
W300	C2
W301	C2
W400	B2
W500	B2

MODEL HP8131A
STANDARD TIMING BOARD
COMPONENT LOCATION CHART

FIGURE 6.4-29.

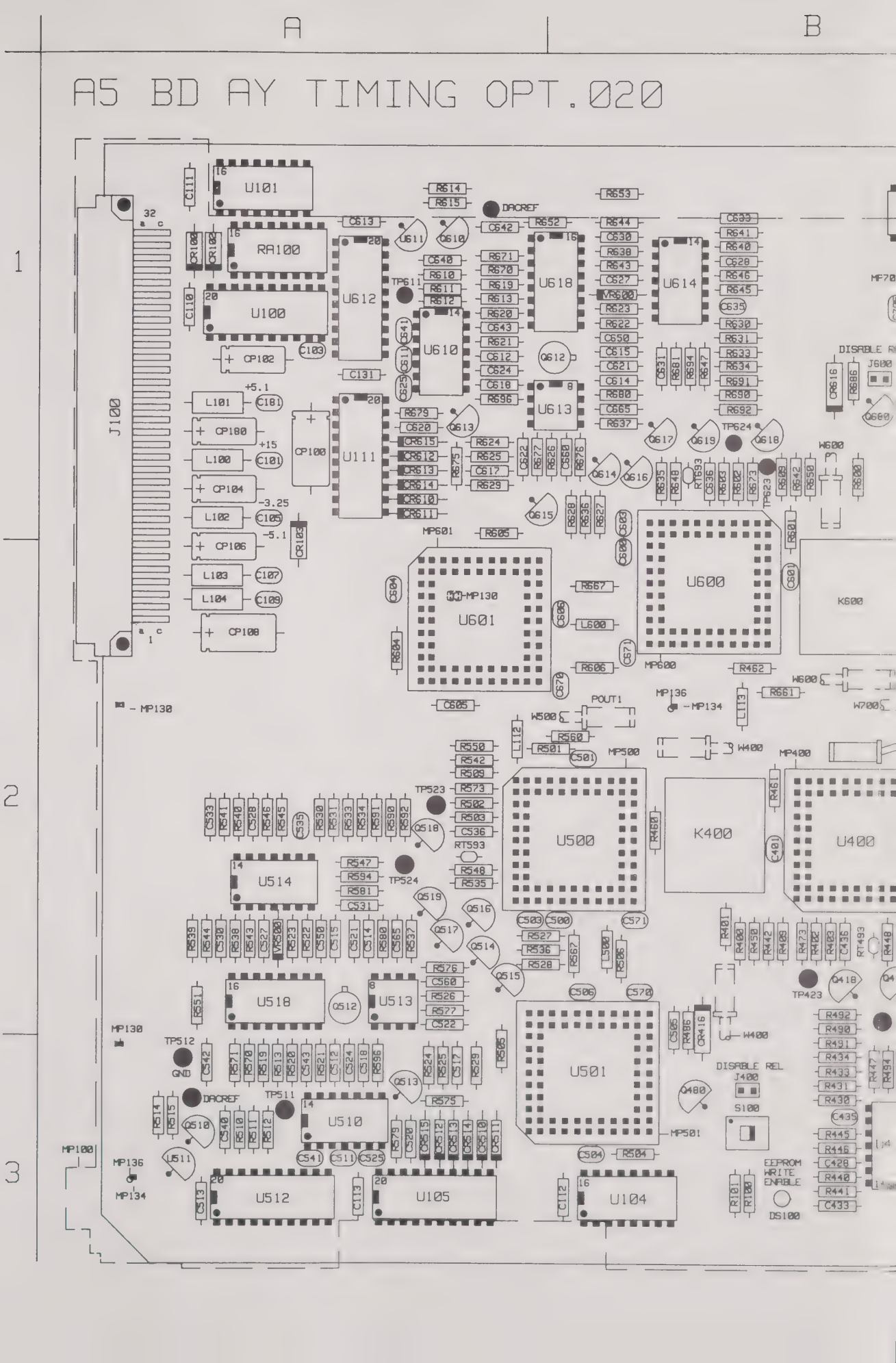
A
B
1
2
3
A5 BD AY TIMING OPT.020
U101
RA100
U100
U612
U610
U618
U614
U613
U111
U601
U600
U500
K400
U400
U514
U518
U513
U501
U510
U512
U105
U104
J100
J400
J600
S100
K600
DS100
TP611
TP624
TP623
TP523
TP524
TP512
TP511
TP423
DACREF
GND
+5.1
+15
-3.25
-5.1
POUT1
DISABLE REL
EEPROM WRITE ENABLE

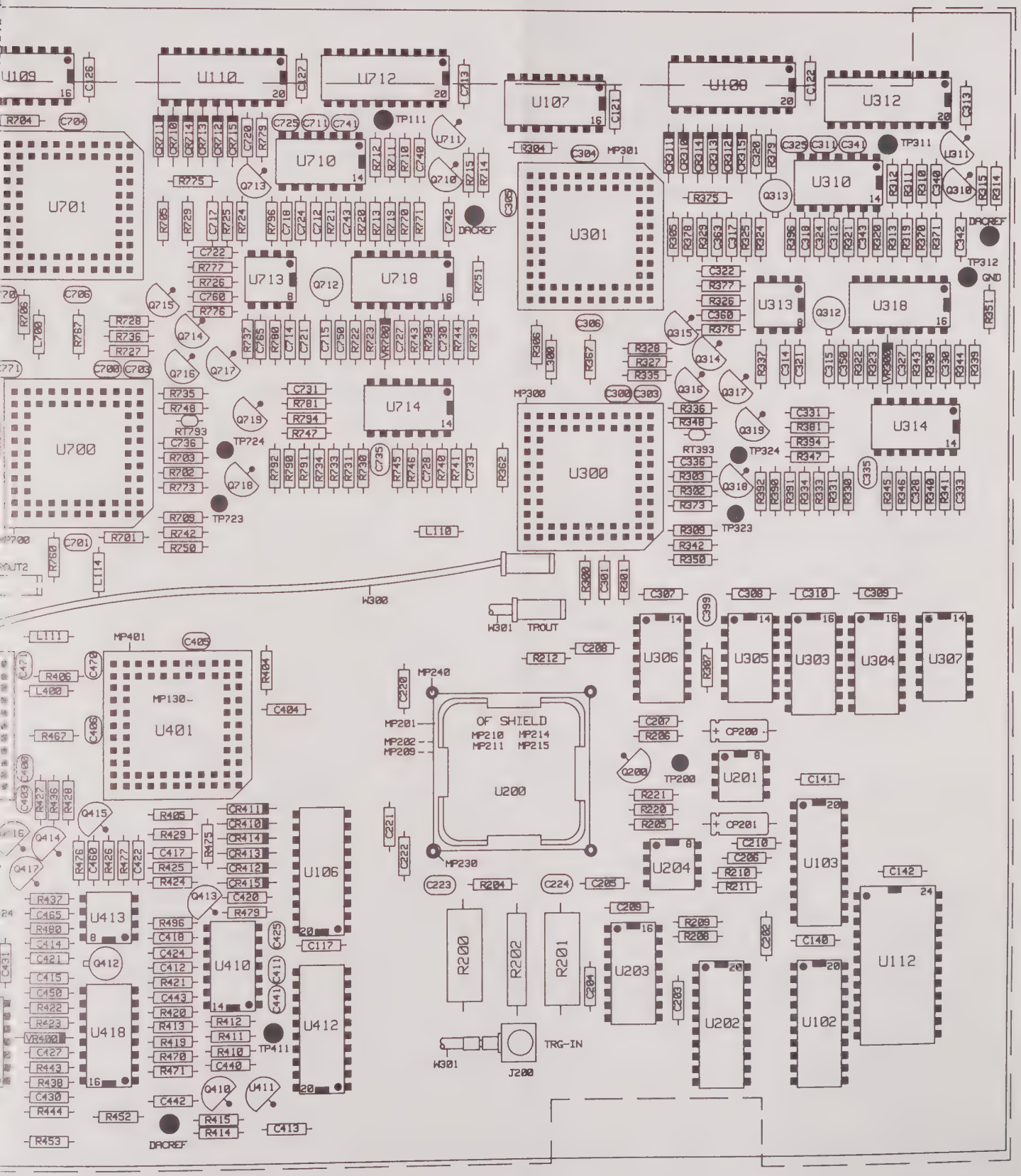

MODEL HP8131A
OPT.020 TIMING BOARD
COMPONENT LAYOUT

FIGURE 6.4-30.

REF. DES.	GRID LOC.	REF. DES.	GRID LOC.	REF. DES.	GRID LOC.	REF. DES.	GRID LOC.	REF. DES.	GRID LOC.	REF. DES.	GRID LOC.	REF. DES.	GRID LOC.	REF DES
C101	A1	C324	D1	C503	B2	C631	B1	CP200	D2	L113	B2	Q517	A2	R32
C103	A1	C325	D1	C504	B3	C633	B1	CP201	D2	L114	B2	Q518	A2	R32
C105	A1	C327	D1	C505	B2	C635	B1	CR100	A1	L300	C1	Q519	A2	R32
C107	A2	C328	D2	C506	B2	C636	B1	CR102	A1	L400	B2	Q610	A1	R32
C109	A2	C330	D1	C511	A3	C640	A1	CR103	A1	L500	B2	Q612	B1	R32
C110	A1	C331	D1	C512	A3	C641	A1	CR310	D1	L600	B2	Q613	A1	R32
C111	A1	C333	D2	C513	A3	C642	A1	CR311	D1	L700	B1	Q614	B1	R32
C112	B3	C335	D2	C514	A2	C643	A1	CR312	D1	MP100	A3	Q615	B1	R3
C113	A3	C336	D2	C515	A2	C650	B1	CR313	D1	MP130	A2	Q616	B1	R3.
C117	C3	C340	D1	C517	A3	C660	B1	CR314	D1	MP134	B2	Q617	B1	R33
C121	C1	C341	D1	C518	A3	C665	B1	CR315	D1	MP136	B2	Q618	B1	R33
C122	D1	C342	D1	C520	A3	C670	B2	CR410	C2	MP201	C2	Q619	B1	R33
C126	B1	C343	D1	C521	A2	C671	B2	CR411	C2	MP202	C2	Q680	B1	R3
C127	C1	C350	D1	C522	A2	C700	B1	CR412	C2	MP209	C2	Q710	C1	R3
C131	A1	C360	D1	C524	A3	C701	B2	CR413	C2	MP210	C2	Q712	C1	R33
C140	D3	C363	D1	C525	A3	C703	C1	CR414	C2	MP211	C2	Q713	C1	R3
C141	D2	C399	D2	C527	A2	C704	B1	CR415	C2	MP214	C2	Q714	C1	R3
C142	D2	C400	B2	C528	A2	C705	B1	CR416	B2	MP215	C2	Q715	C1	R33
C181	A1	C401	B2	C530	A2	C706	B1	CR510	A3	MP230	C2	Q716	C1	R34
C202	D3	C403	B2	C531	A2	C711	C1	CR511	A3	MP240	C2	Q717	C1	R34
C203	D3	C404	C2	C533	A2	C712	C1	CR512	A3	MP300	C1	Q718	C2	R34
C204	C3	C405	C2	C535	A2	C713	C1	CR513	A3	MP301	C1	Q719	C1	R34
C205	C2	C406	B2	C536	A2	C714	C1	CR514	A3	MP400	B2	R100	B3	R34
C206	D2	C411	C3	C540	A3	C715	C1	CR515	A3	MP401	B2	R101	B3	R3
C207	D2	C412	C3	C541	A3	C717	C1	CR610	A1	MP500	B2	R200	C3	R34
C208	C2	C413	C3	C542	A3	C718	C1	CR611	A1	MP501	B3	R201	C3	R34
C209	C2	C414	B3	C543	A3	C720	C1	CR612	A1	MP600	B2	R202	C3	R34
C210	D2	C415	B3	C550	A2	C721	C1	CR613	A1	MP601	A2	R204	C2	R34
C220	C2	C417	C2	C560	A2	C722	C1	CR614	A1	MP700	B2	R205	D2	R35
C221	C2	C418	C3	C565	A2	C724	C1	CR615	A1	MP701	B1	R206	D2	R36
C222	C2	C420	C2	C570	B2	C725	C1	CR616	B1	Q200	C2	R208	D3	R36
C223	C2	C421	B3	C571	B2	C727	C1	CR710	C1	Q310	D1	R209	D3	R37
C224	C2	C422	C2	C600	B2	C728	C2	CR711	C1	Q312	D1	R210	D2	R37
C300	C1	C424	C3	C601	B2	C730	C1	CR712	C1	Q313	D1	R211	D2	R37
C301	C2	C425	C3	C603	B1	C731	C1	CR713	C1	Q314	D1	R212	C2	R37
C303	C1	C427	B3	C604	A2	C733	C2	CR714	C1	Q315	D1	R220	D2	R37
C304	C1	C428	B3	C605	A2	C735	C2	CR715	C1	Q316	D1	R221	D2	R37
C305	C1	C430	B3	C606	B2	C736	C2	DS100	B3	Q318	D2	R300	C2	R37
C306	C1	C431	B3	C611	A1	C740	C1	J100	A1	Q319	D2	R301	C2	R37
C307	D2	C433	B3	C612	A1	C741	C1	J200	C3	Q410	C3	R302	D2	R38
C308	D2	C435	B3	C613	A1	C742	C1	J400	B3	Q412	B3	R303	D2	R39
C309	D2	C436	B2	C614	B1	C743	C1	J600	B1	Q413	C2	R304	C1	R39
C310	D2	C440	C3	C615	B1	C750	C1	K400	B2	Q414	B2	R305	D1	R39
C311	D2	C441	C3	C617	A1	C760	C1	K600	B2	Q415	B2	R306	C1	R39
C312	D1	C442	C3	C618	A1	C765	C1	L100	A1	Q416	B2	R307	D2	R39
C313	D1	C443	C3	C620	A1	C770	B1	L101	A1	Q417	B2	R309	D2	R39
C314	D1	C450	B3	C621	B1	C771	B1	L102	A1	Q418	B2	R310	D1	R40
C315	D1	C460	B2	C622	B1	CP100	A1	L103	A2	Q419	B2	R311	D1	R40
C317	D1	C465	B2	C624	A1	CP102	A1	L104	A2	Q480	B3	R312	D1	R40
C318	D1	C470	B2	C625	A1	CP104	A1	L110	C2	Q510	A3	R313	D1	R40
C320	D1	C471	B2	C627	B1	CP106	A2	L111	B2	Q512	A2	R314	D1	R40
C321	D1	C500	B2	C628	B1	CP108	A2	L112	B2	Q513	A3	R315	D1	R40
C322	D1	C501	B2	C630	B1	CP180	A1			Q514	A2	R319	D1	R40
										Q515	A2	R320	D1	
										Q516	A2			

GRID LOC.	REF. DES.	GRID LOC.	REF. DES.	GRID LOC.	REF. DES.	GRID LOC.	REF. DES.	GRID LOC.	REF. DES.	GRID LOC.	REF. DES.	GRID LOC.	REF. DES.	GRID LOC.
D1	R410	C3	R492	B2	R576	A2	R652	B1	R741	C2	U100	A1	U614	B1
D1	R411	C3	R494	B3	R577	A2	R653	B1	R742	C2	U101	A1	U618	B1
D1	R412	C3	R496	C2	R579	A3	R660	B2	R743	C1	U102	D3	U700	B2
D1	R413	C3	R501	B2	R580	A2	R661	B2	R744	C1	U103	D2	U701	B1
D1	R414	C3	R502	A2	R581	A2	R667	B2	R745	C2	U104	B3	U710	C1
D1	R415	C3												
C1	R419	C3	R503	A2	R590	A2	R670	A1	R746	C2	U105	A3	U711	C1
C1	R420	C3	R504	B3	R591	A2	R671	A1	R747	C2	U106	C2	U712	C1
D1	R421	C3	R505	A3	R592	A2	R673	B1	R748	C1	U107	C1	U713	C1
D2	R422	B3	R506	B2	R594	A2	R675	A1	R750	C2	U108	C1	U714	C1
			R509	A2	R596	A3	R676	B1	R751	C1	U109	B1	U718	C1
D2	R423	B3	R510	A3	R600	B1	R677	B1	R760	B2	U110	C1	VR300	D1
D2	R424	C2	R511	A3	R601	B1	R679	A1	R767	B1	U111	A1	VR400	B3
D2	R425	C2	R512	A3	R602	B1	R680	B1	R770	C1	U112	D3	VR500	A2
C1	R426	B2	R513	A3	R603	B1	R681	B1	R771	C1	U200	C2	VR600	B1
D1	R427	B2	R514	A3	R604	A2	R686	B1	R773	C2	U201	D2	VR700	C1
D1	R428	B2	R515	A3	R605	A1	R690	B1	R775	C1	U202	D3	W300	C2
D1	R429	C2	R519	A3	R606	B2	R691	B1	R776	C1	U203	C3	W301	C2
D1	R430	B3	R520	A3	R609	B1	R692	B1	R777	C1	U204	D2	W400	B2
D2	R431	B3	R521	A3	R610	A1	R694	B1	R779	C1	U300	C2	W500	B2
D2	R433	B3	R522	A2	R611	A1	R696	A1	R780	C1	U301	C1	W600	B1
													W700	B2
D2	R434	B3	R523	A2	R612	A1	R701	B2	R781	C1	U303	D2		
D1	R435	B2	R524	A3	R613	A1	R702	C2	R790	C2	U304	D2		
D1	R436	B2	R525	A3	R614	A1	R703	C2	R791	C2	U305	D2		
D2	R437	B2	R526	A2	R615	A1	R704	B1	R792	C2	U306	D2		
D2	R438	B3	R527	B2	R619	A1	R705	C1	R794	C2	U307	D2		
									R796	C1				
D2	R440	B3	R528	B2	R620	A1	R706	B1			U310	D1		
D2	R441	B3	R529	A3	R621	A1	R709	C2	RA100	A1	U311	D1		
D2	R442	B2	R530	A2	R622	B1	R710	C1			U312	D1		
D1	R443	B3	R531	A2	R623	B1	R711	C1	RT393	D2	U313	D1		
C2	R444	B3	R533	A2	R624	A1	R712	C1	RT493	B2	U314	D2		
									RT593	A2				
C1	R445	B3	R534	A2	R625	A1	R713	C1	RT693	B1	U318	D1		
D1	R446	B3	R535	A2	R626	B1	R714	C1	RT793	C2	U400	B2		
D1	R447	B3	R536	B2	R627	B1	R719	C1			U401	C2		
D2	R448	B2	R537	A2	R628	B1	R720	C1	S100	B3	U410	C3		
D1	R450	B2	R538	A2	R629	A1	R721	C1			U411	C3		
									TP200	D2				
D1	R452	B3	R539	A2	R630	B1	R722	C1	TP311	D1				
D1	R453	B3	R540	A2	R631	B1	R723	C1	TP312	D1	U412	C3		
D1	R460	B2	R541	A2	R633	B1	R724	C1	TP323	D2	U413	B2		
D1	R461	B2	R542	A2	R634	B1	R725	C1	TP324	D2	U414	B3		
D2	R462	B2	R543	A2	R635	B1	R726	C1			U418	B3		
									TP411	C3	U500	B2		
D2	R467	B2	R544	A2	R636	B1	R727	C1	TP423	B2				
D2	R470	C3	R545	A2	R637	B1	R728	C1	TP424	B2	U501	B3		
D2	R471	C3	R546	A2	R638	B1	R729	C1	TP511	A3	U510	A3		
D2	R473	B2	R547	A2	R640	B1	R730	C2	TP512	A3	U511	A3		
D1	R475	B2	R548	A2	R641	B1	R731	C2			U512	A3		
									TP523	A2	U513	A2		
B2	R476	B2	R550	A2	R642	B1	R733	C2	TP524	A2				
B2	R477	B2	R551	A2	R643	B1	R734	C2	TP611	A1	U514	A2		
B2	R479	C2	R560	B2	R644	B1	R735	C1	TP623	B1	U518	A2		
B2	R480	B3	R567	B2	R645	B1	R736	C1	TP624	B1	U600	B2		
C2	R481	B3	R570	A3	R646	B1	R737	C1			U601	A2		
									TP711	C1	U610	A1		
C2	R486	B2	R571	A3	R647	B1	R738	C1	TP723	C2				
B2	R490	B2	R573	A2	R648	B1	R739	C1	TP724	C2	U611	A1		
B2	R491	B3	R575	A3	R650	B1	R740	C2			U612	A1		
											U613	B1		

MODEL HP8131A
OPT.020 TIMING BOARD
COMPONENT LOCATION CHART

FIGURE 6.4-31.

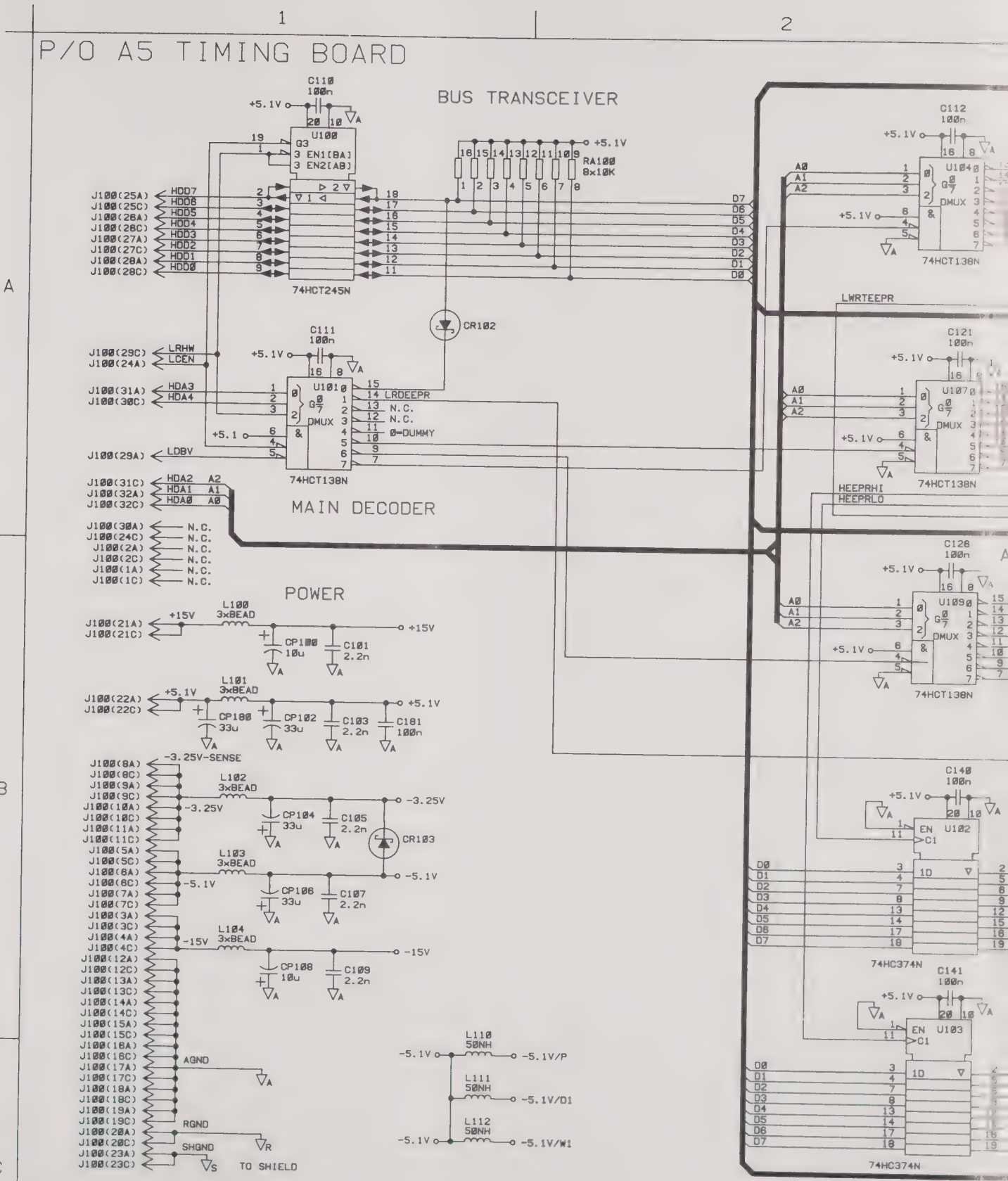
P/O A5 TIMING BOARD
BUS TRANSCEIVER
MAIN DECODER
POWER
CALIBRATION
74HCT245N
74HCT138N
74HC374N
RA100
8x10K
CR102
CR103
LWRTEEPR
HEEPRHI
HEEPRLO
LRDEEPR
N.C.
Ø=DUMMY
AGND
RGND
SHGND
TO SHIELD
-5.1V/P
-5.1V/D1
-5.1V/W1

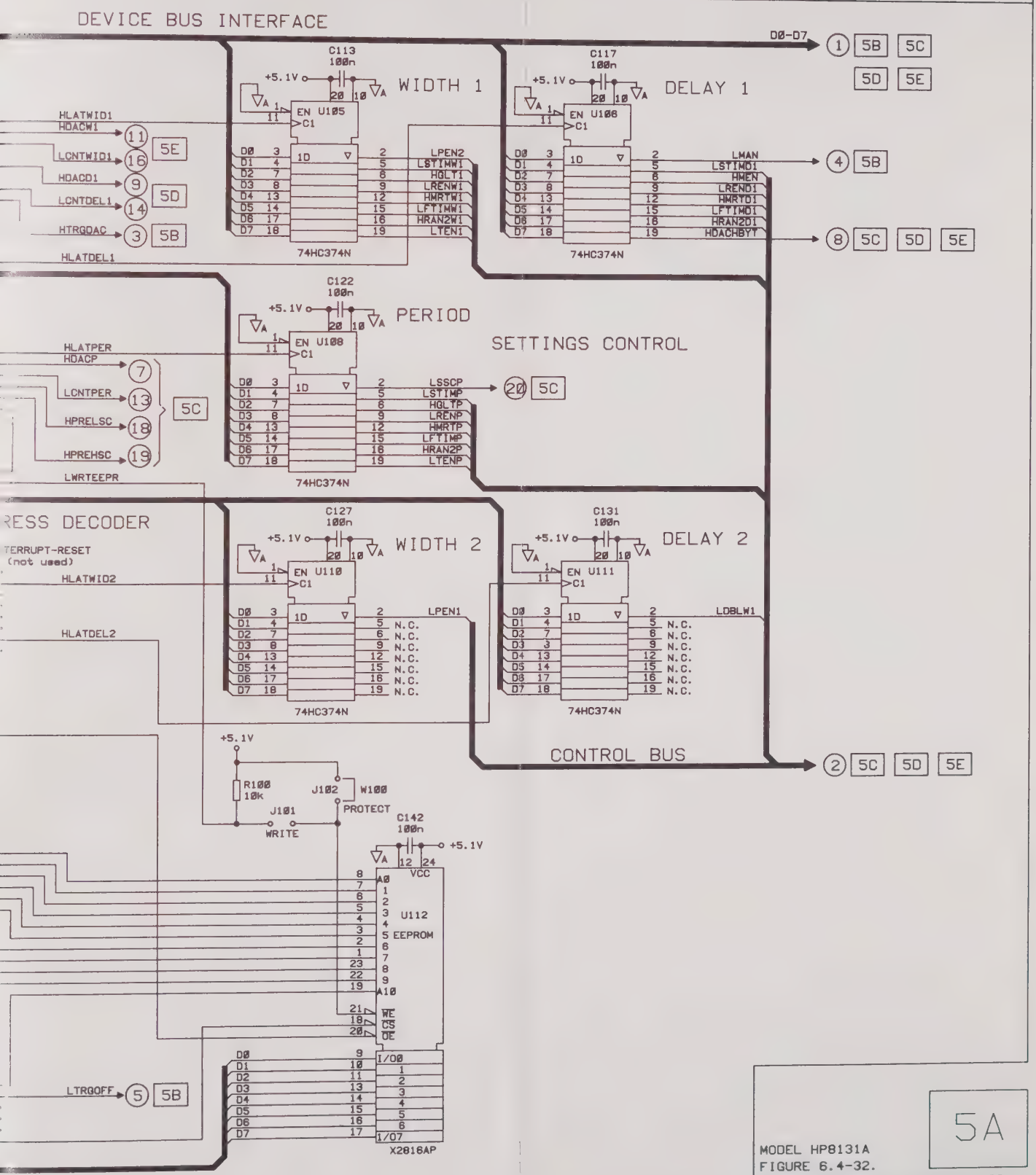

MODEL HP8131A
FIGURE 6.4-32.
STANDARD TIMING BD SCHEMATICS
(SHEET 1 OF 8)

5A

TIMING BOARD (A5)

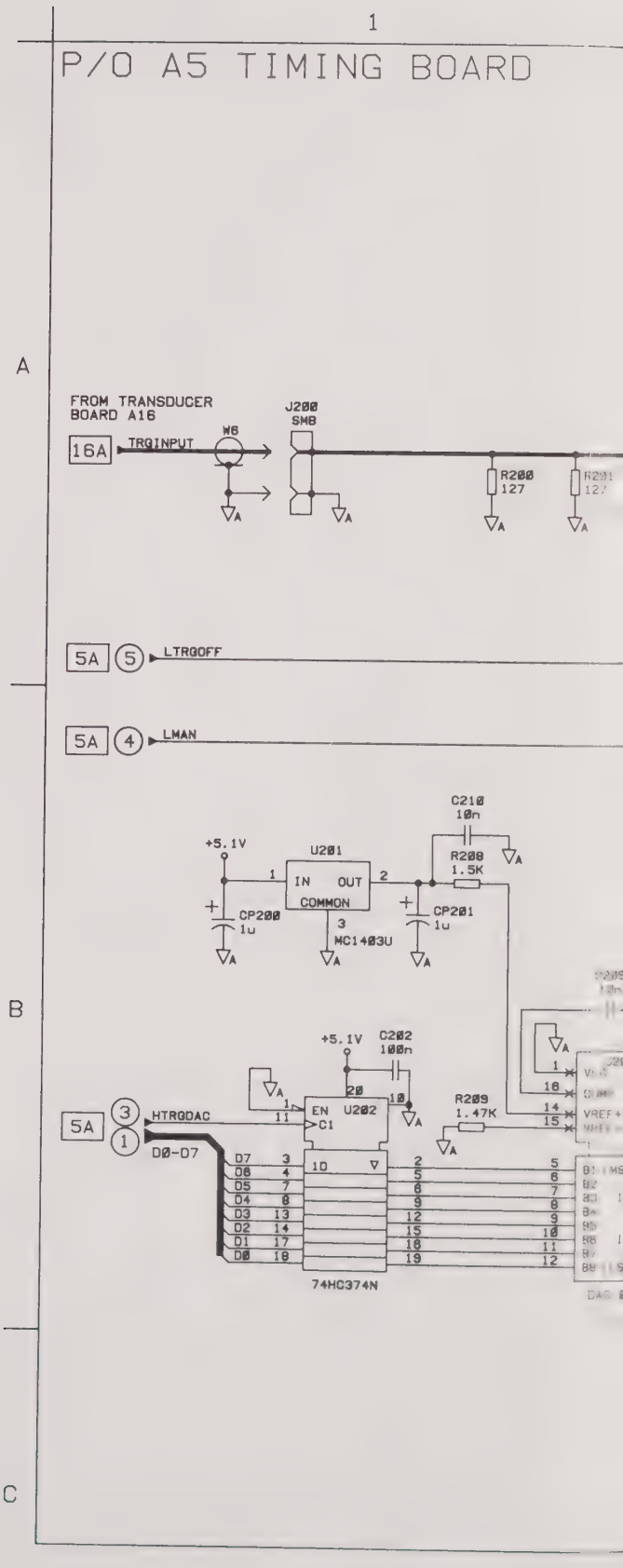
1
P/O A5 TIMING BOARD
A
B
C
FROM TRANSDUCER BOARD A16
16A
TRGINPUT
W6
J200 SMB
R200 127
5A 5 LTRGOFF
5A 4 LMAN
C210 10n
+5.1V
U201
IN
OUT
COMMON
MC1403U
CP200 1u
CP201 1u
R208 1.5K
C202 100n
U202
EN
C1
1D
5A 3 HTRGDAC
5A 1 D0-D7
D7 D6 D5 D4 D3 D2 D1 D0
R209 1.47K
74HC374N

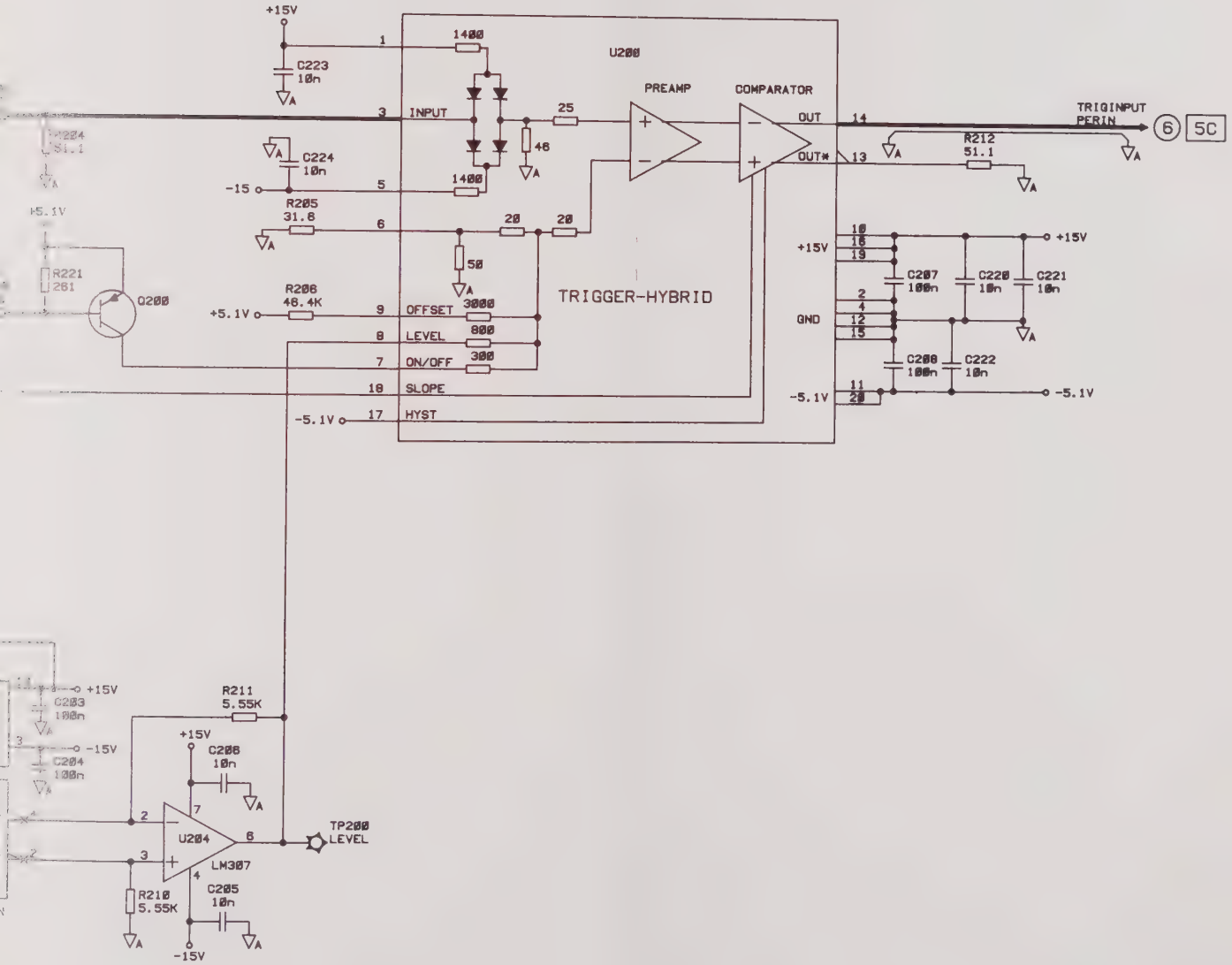

5B

MODEL HP8131A
FIGURE 6.4-33.
STANDARD TIMING BD SCHEMATICS
(SHEET 2 OF 8)

P/O A5 TIMING BOARD

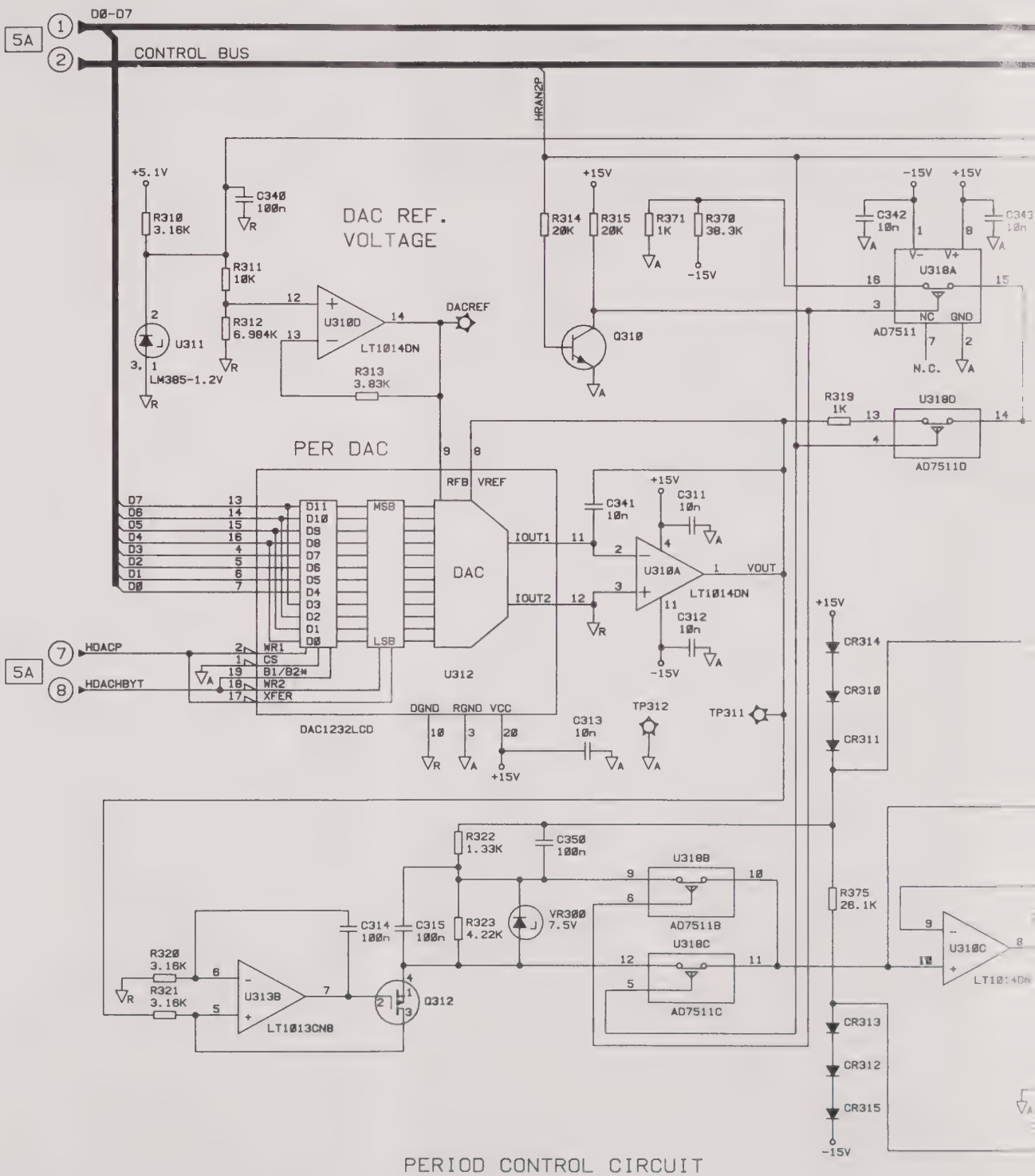

PERIOD CONTROL CIRCUIT

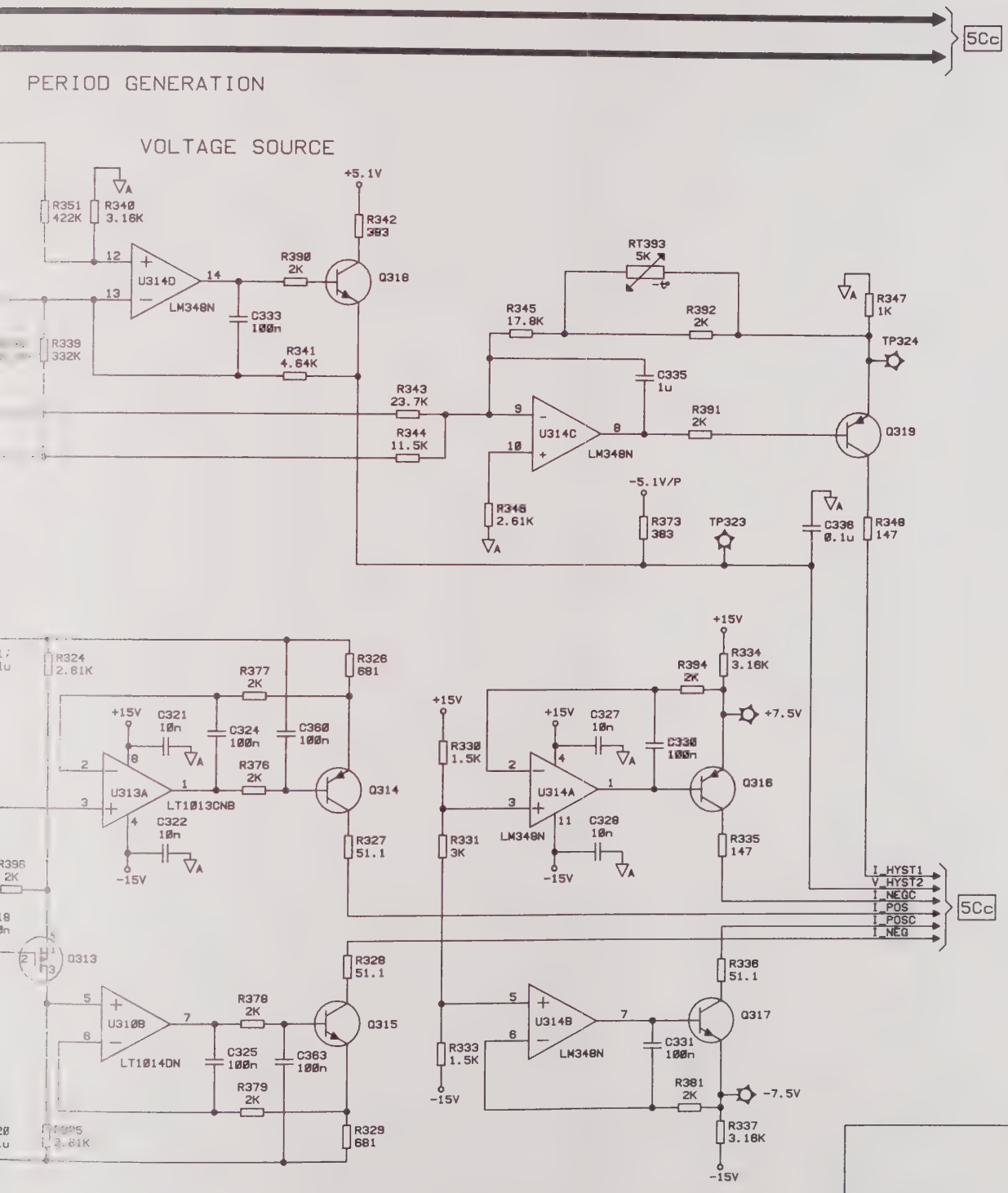

5C

MODEL HP8131A
FIGURE 6.4-34.
STANDARD TIMING BD SCHEMATICS
(SHEET 3 OF 8)

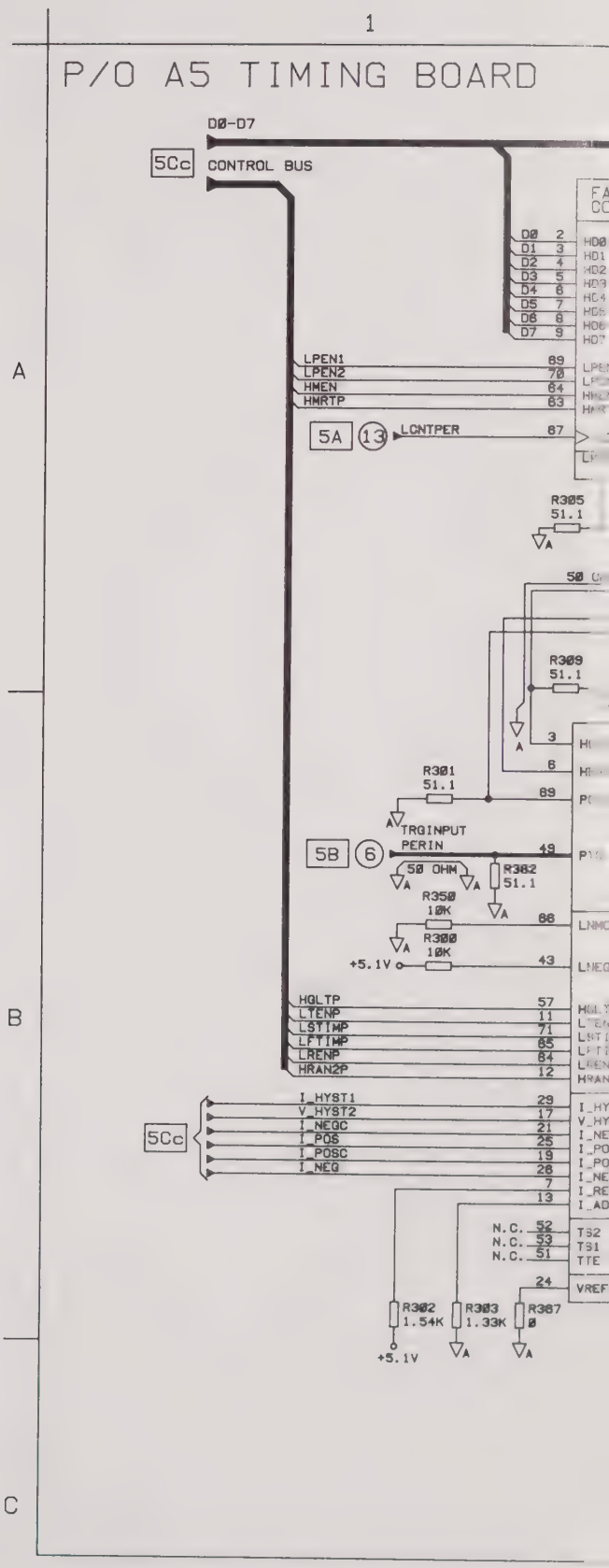
1
P/O A5 TIMING BOARD
A
B
C
D0-D7
5Cc
CONTROL BUS
D0 2
D1 3
D2 4
D3 5
D4 6
D5 7
D6 8
D7 9
LPEN1 89
LPEN2 70
HMEN 84
HMRTP 83
5A 13 LCNTPER 67
R305 51.1
R309 51.1
R301 51.1
TRGINPUT
PERIN 49
5B 6
50 OHM
R302 51.1
R350 10K
R300 10K
+5.1V
86
43
HQLTP 57
LTENP 11
LSTTMP 71
LFTTMP 65
LRENP 84
HRAN2P 12
I_HYST1 29
V_HYST2 17
I_NEGC 21
I_POS 25
I_POSC 19
I_NEG 28
7
13
N.C. 52
N.C. 53
N.C. 51
24
R302 1.54K
R303 1.33K
R307 0
+5.1V

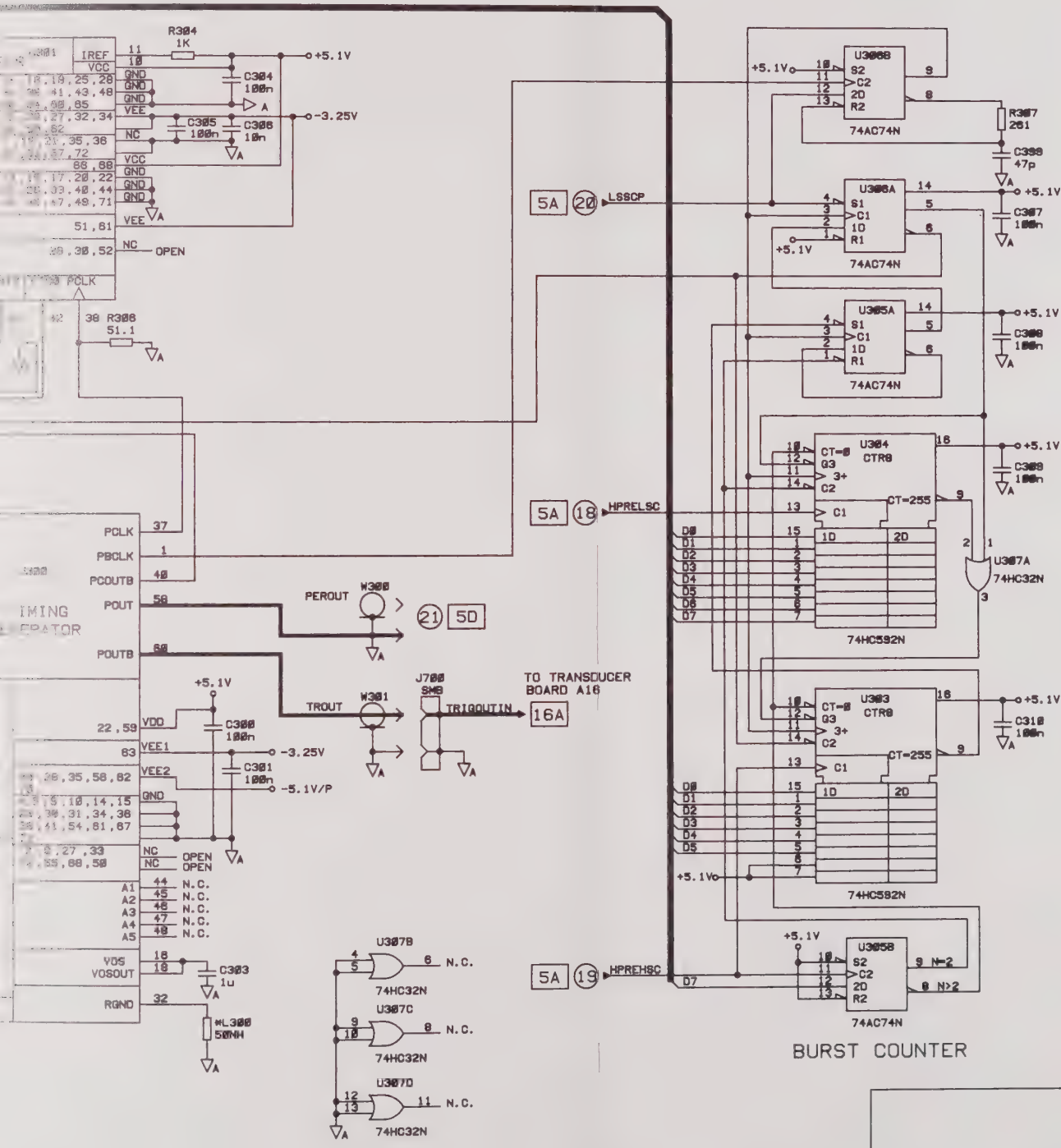

5C

MODEL HP8131A
FIGURE 6.4-35.
STANDARD TIMING BD SCHEMATICS
(SHEET 4 OF 8)

P/O A5 TIMING BOARD

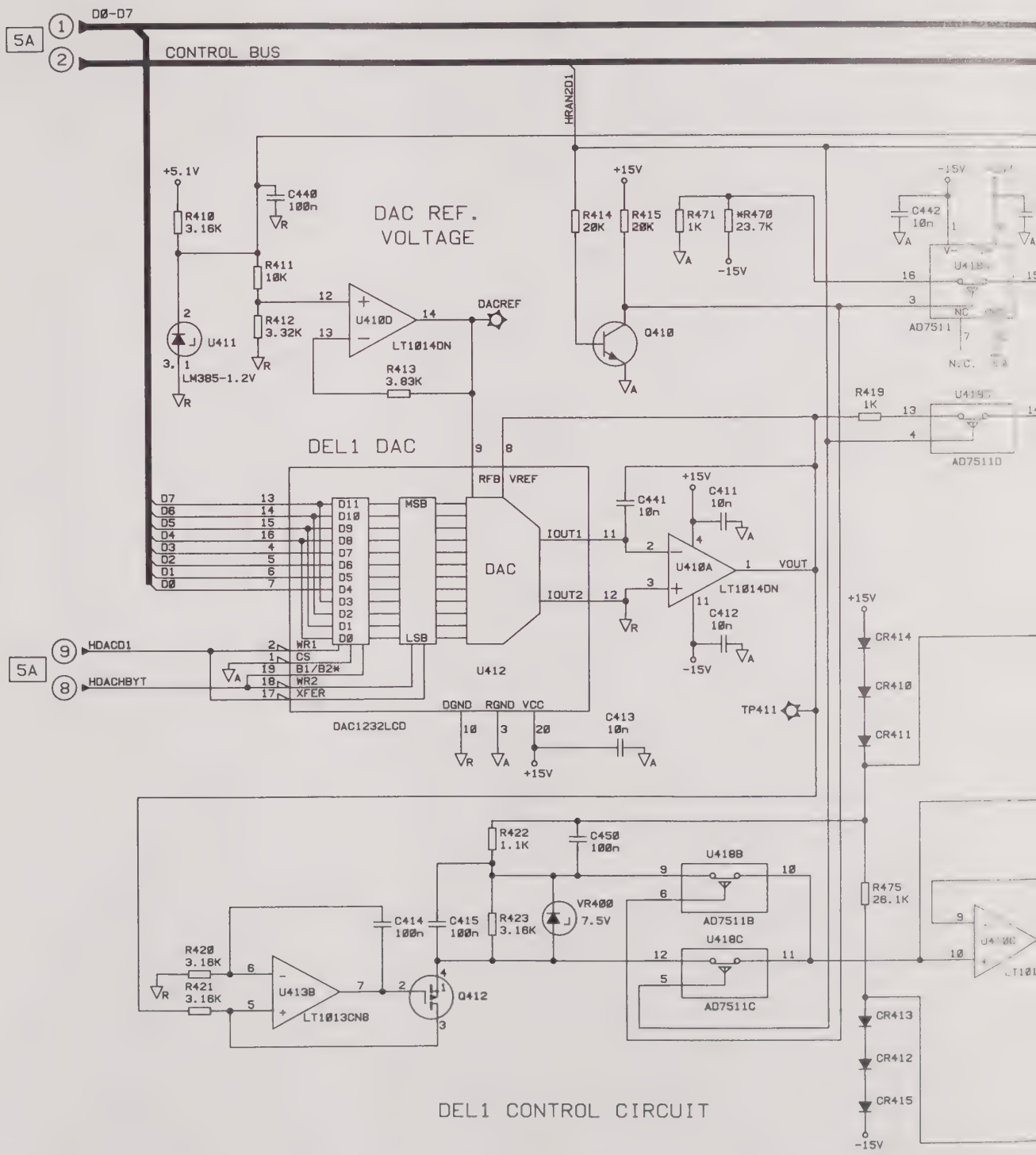

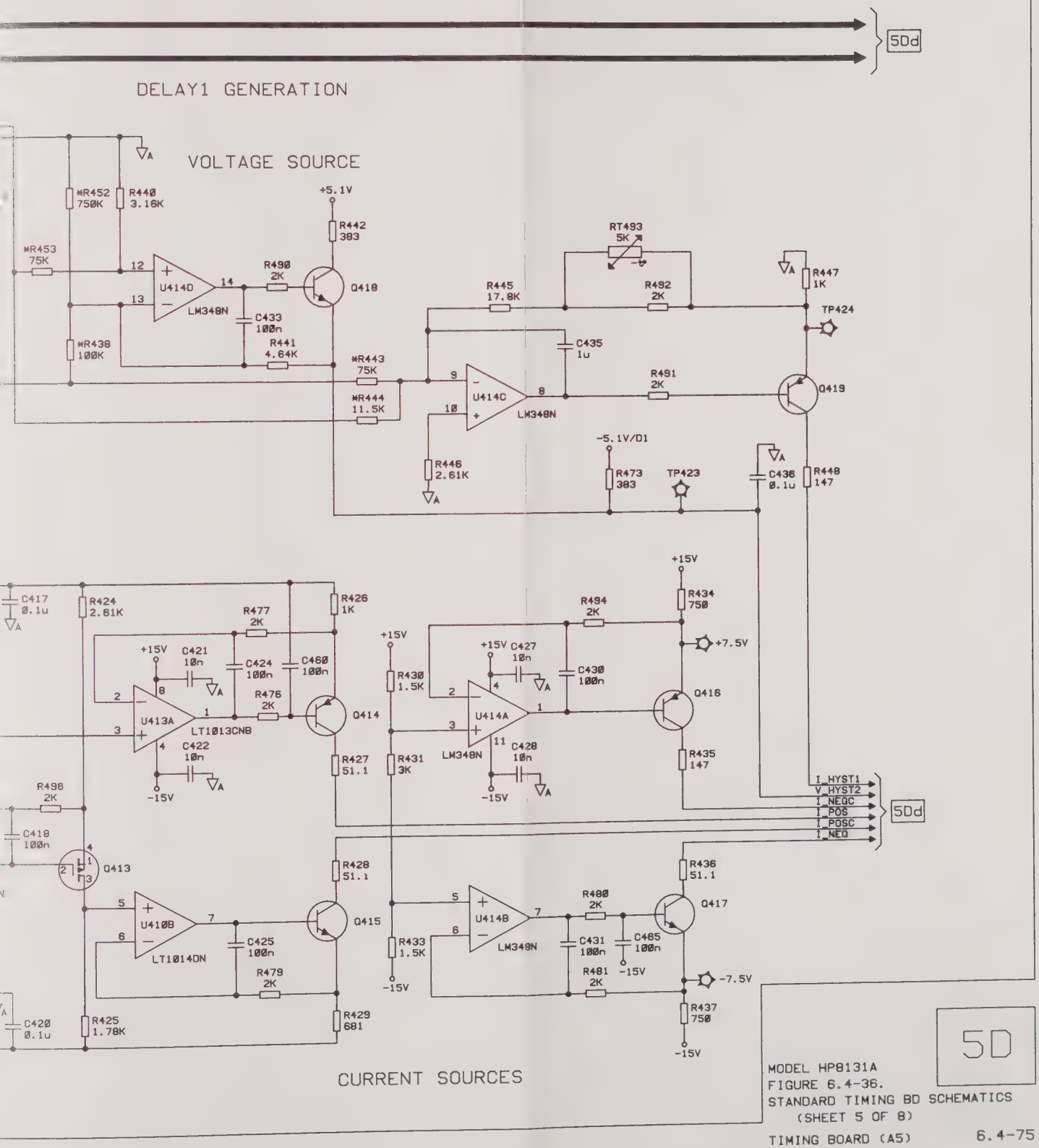

5D

MODEL HP8131A
FIGURE 6.4-36.
STANDARD TIMING BD SCHEMATICS
(SHEET 5 OF 8)

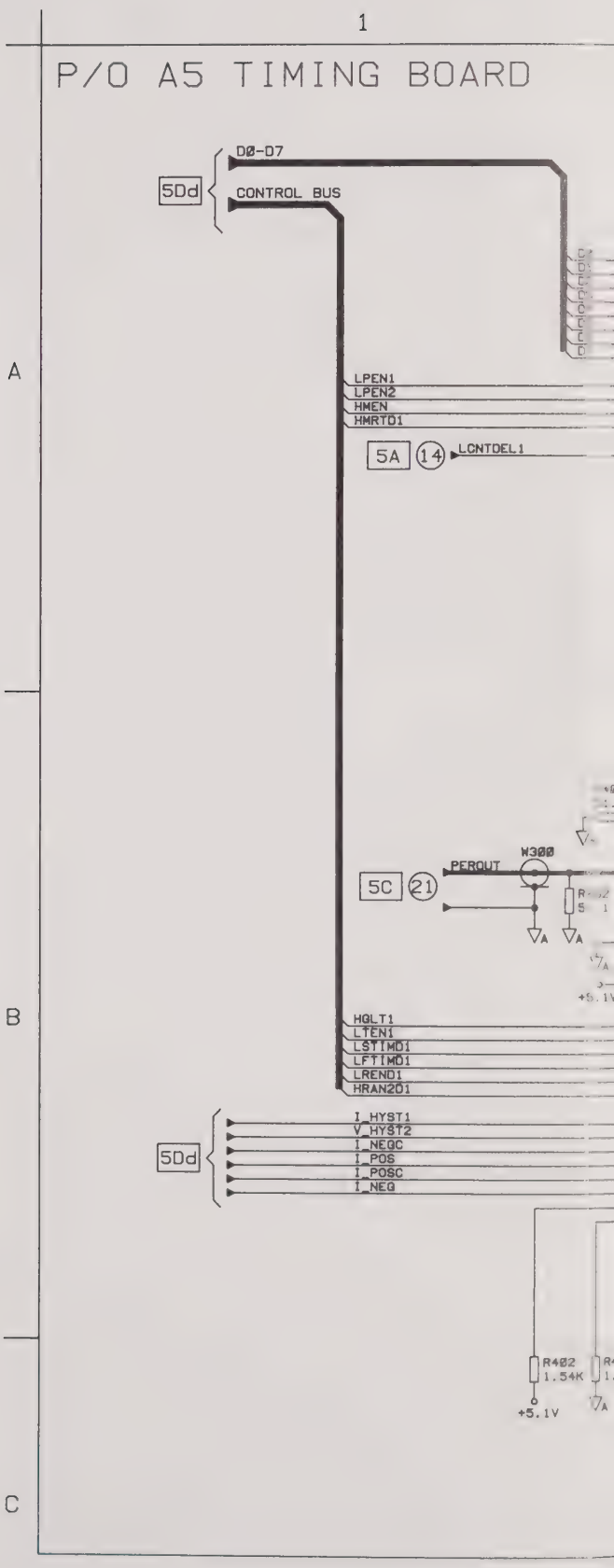
1
P/O A5 TIMING BOARD
A
B
C
D0-D7
5Dd
CONTROL BUS
LPEN1
LPEN2
HMEN
HMRTD1
5A
14
LCNTDEL1
W300
PEROUT
5C
21
+5.1V
HBLT1
LTEN1
LSTIMD1
LFTIMD1
LREND1
HRAN2D1
I_HYST1
V_HYST2
I_NEGC
I_POS
I_POSC
I_NEG
5Dd
R402
1.54K
+5.1V

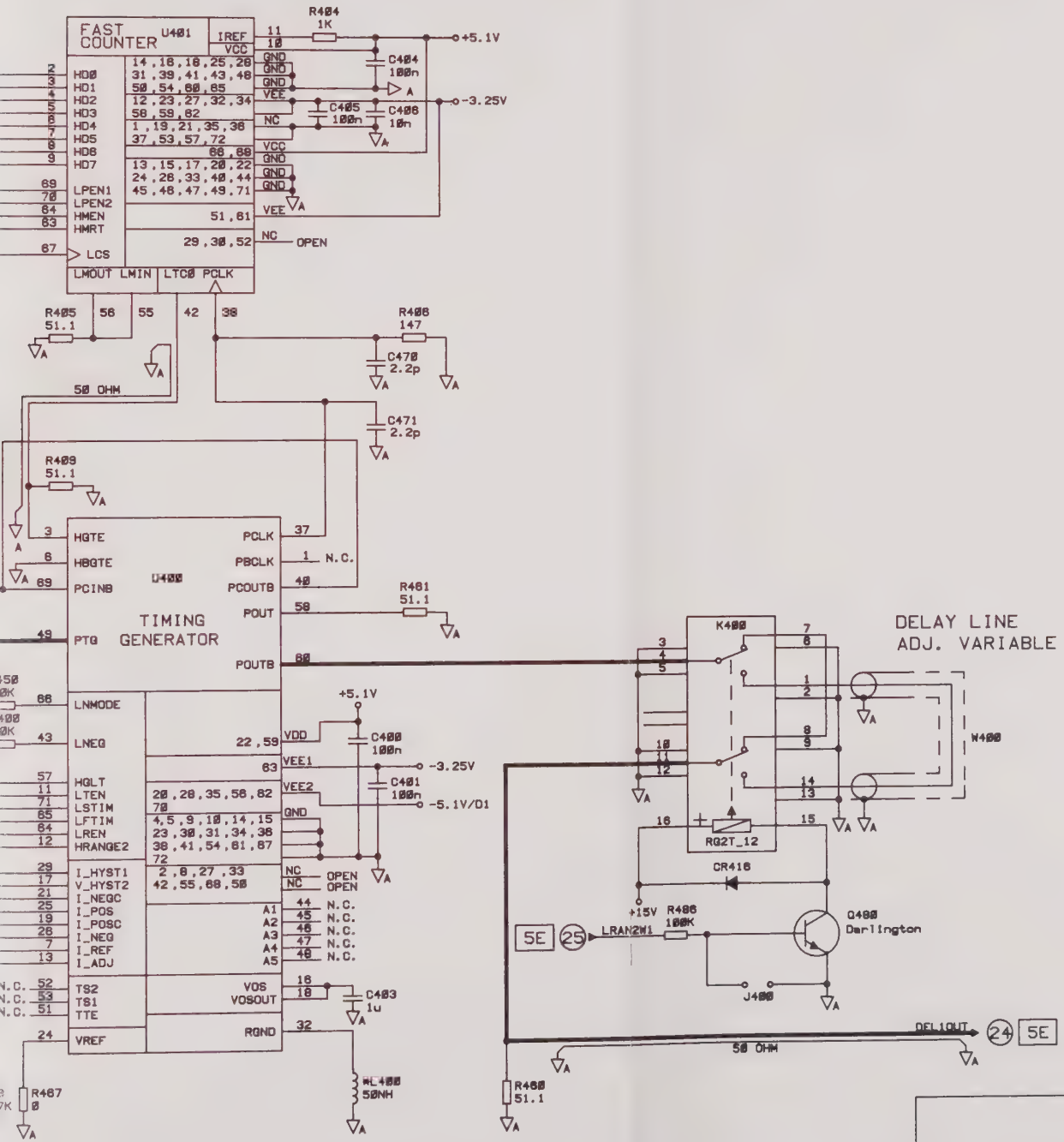

MODEL HP8131A
FIGURE 6.4-37.
STANDARD TIMING BD SCHEMATICS
(SHEET 6 OF 8)

5D

P/O A5 TIMING BOARD

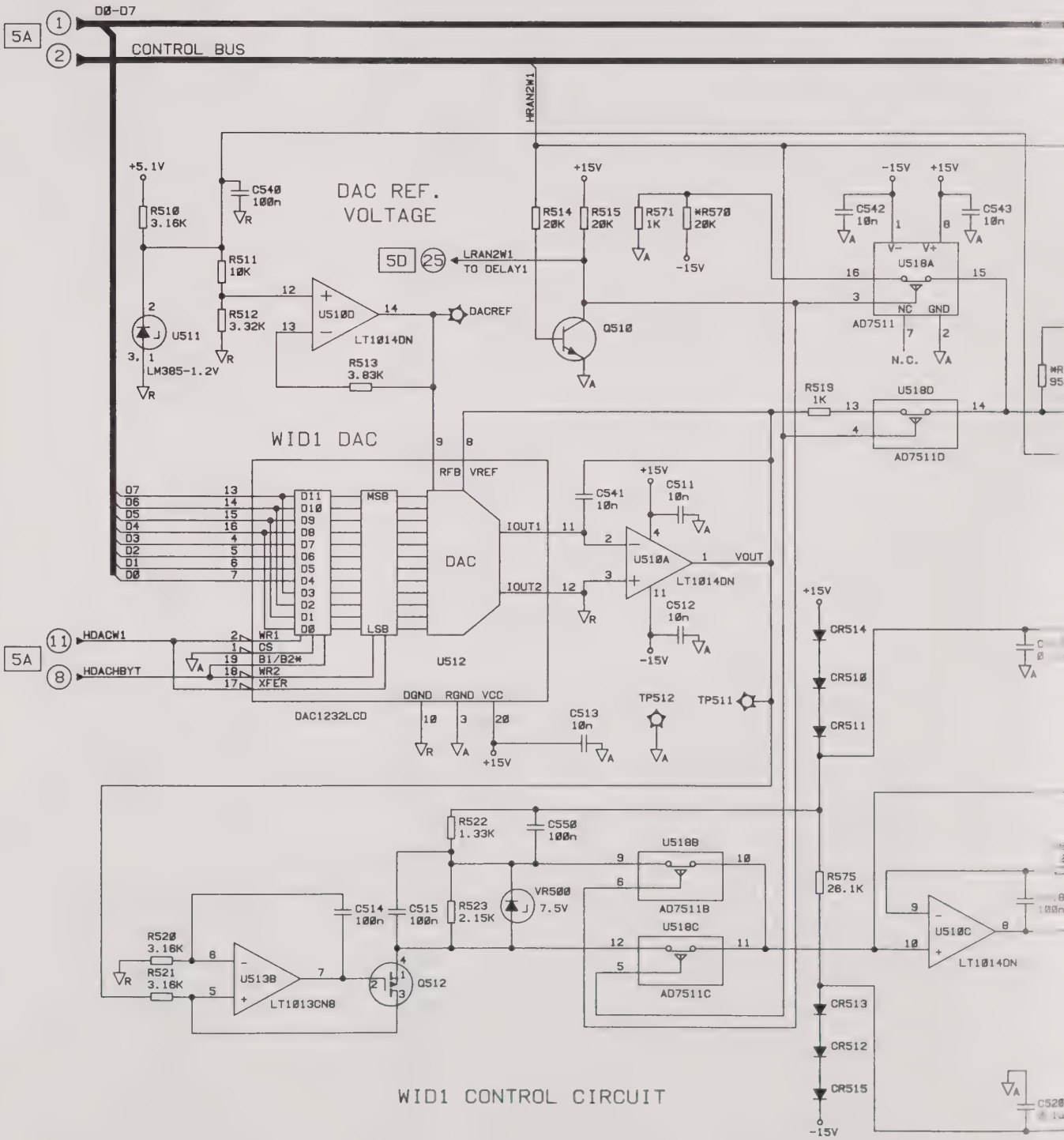

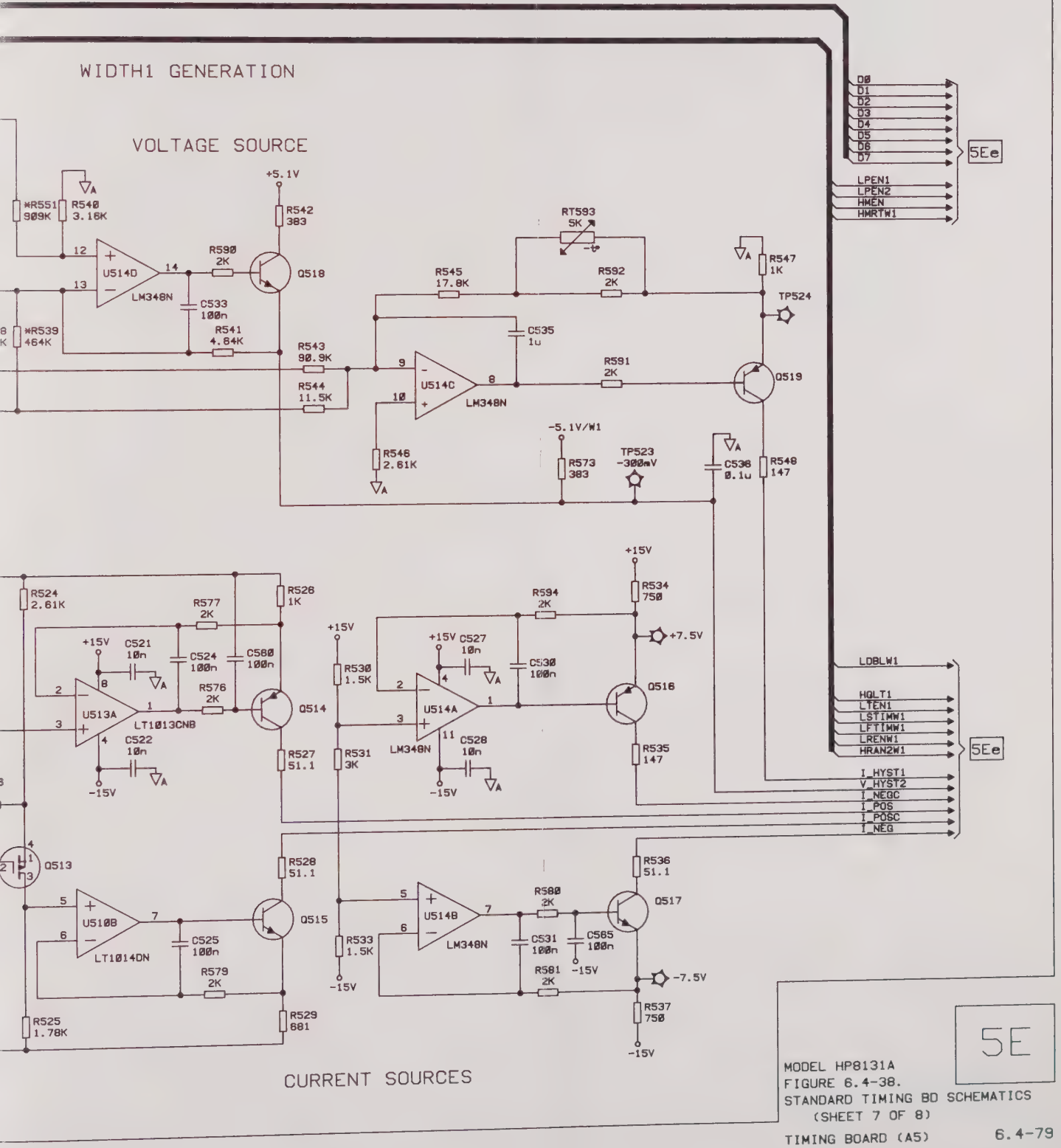

MODEL HP8131A
FIGURE 6.4-38.
STANDARD TIMING BD SCHEMATICS
(SHEET 7 OF 8)

5E

P/O A5 TIMING BOARD

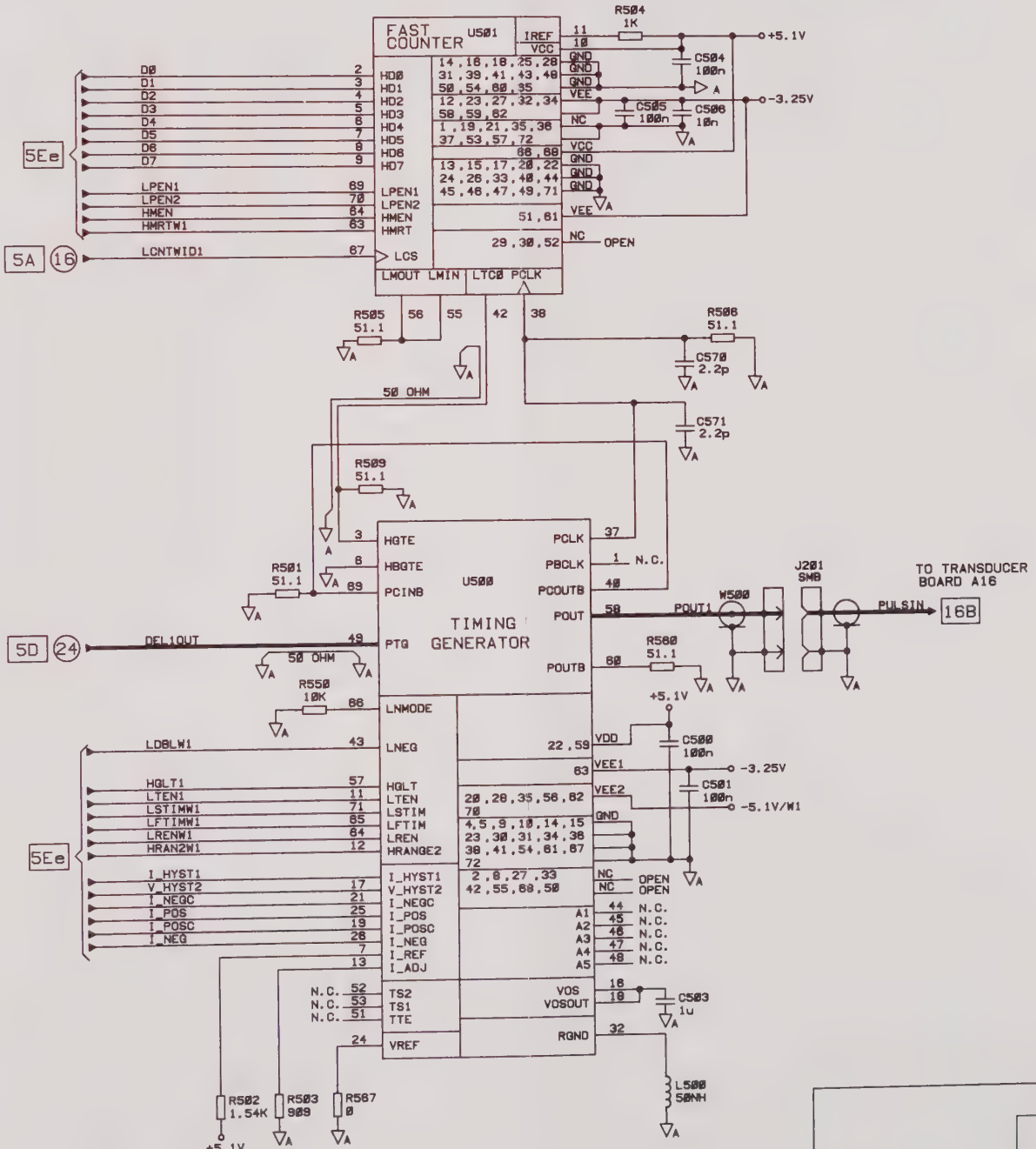

5E

MODEL HP8131A
FIGURE 6.4-39.
STANDARD TIMING BD SCHEMATICS
(SHEET 8 OF 8)

TIMING BOARD (A5) 6.4-81

P/O A5 TIMING BOARD (OPT.020)

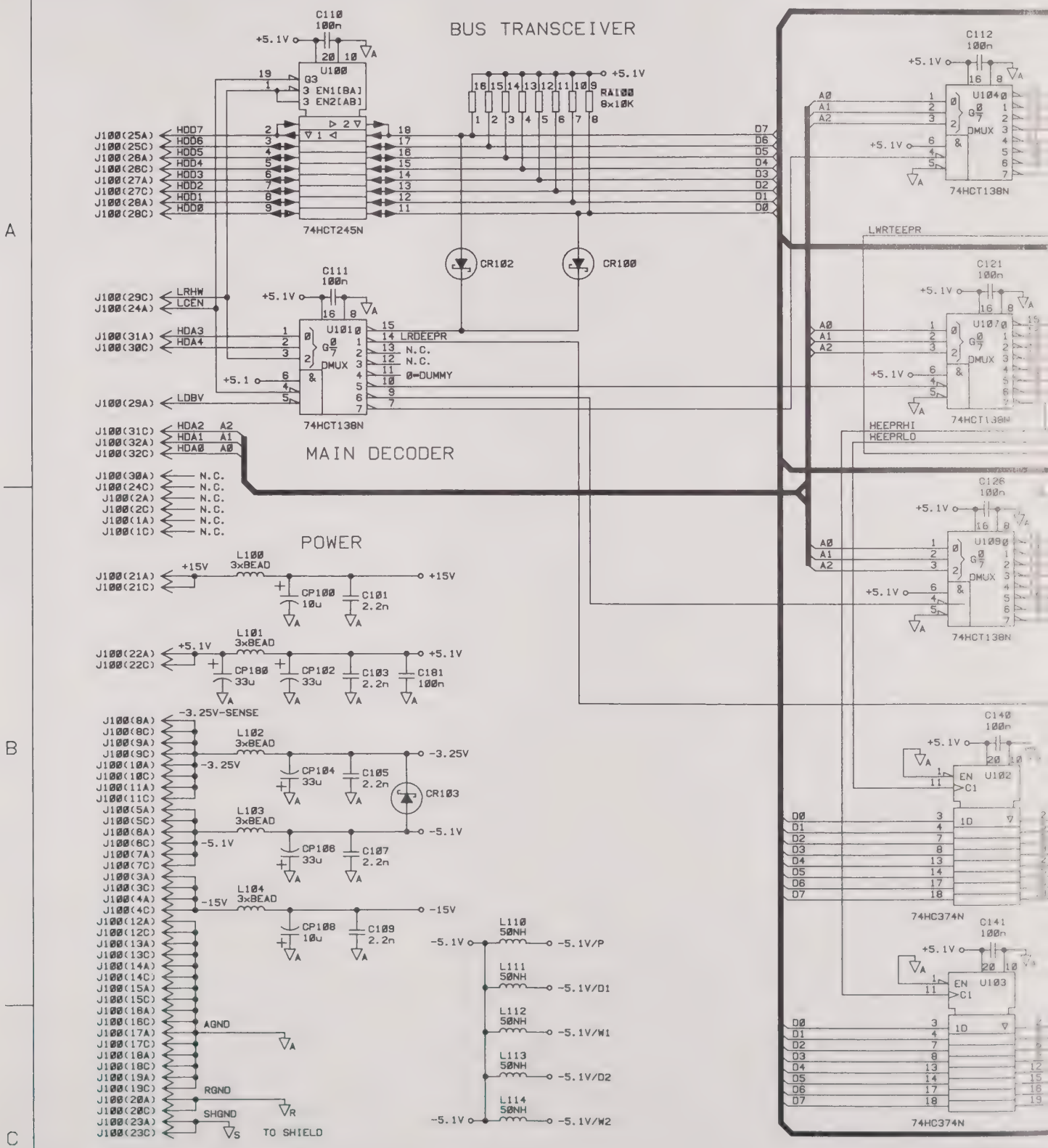

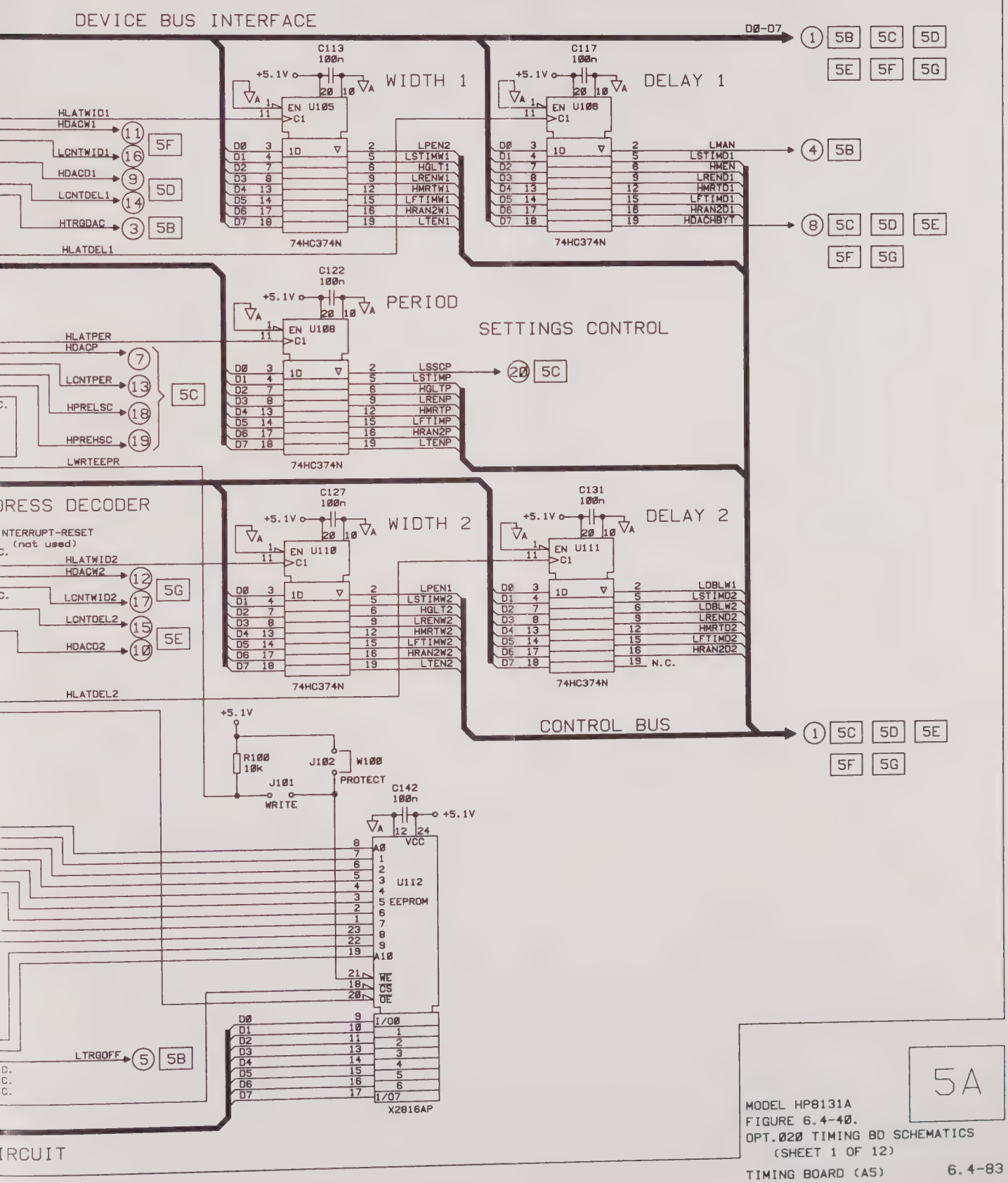

MODEL HP8131A
FIGURE 6.4-40.
OPT.020 TIMING BD SCHEMATICS
(SHEET 1 OF 12)
TIMING BOARD (A5)

6.4-83

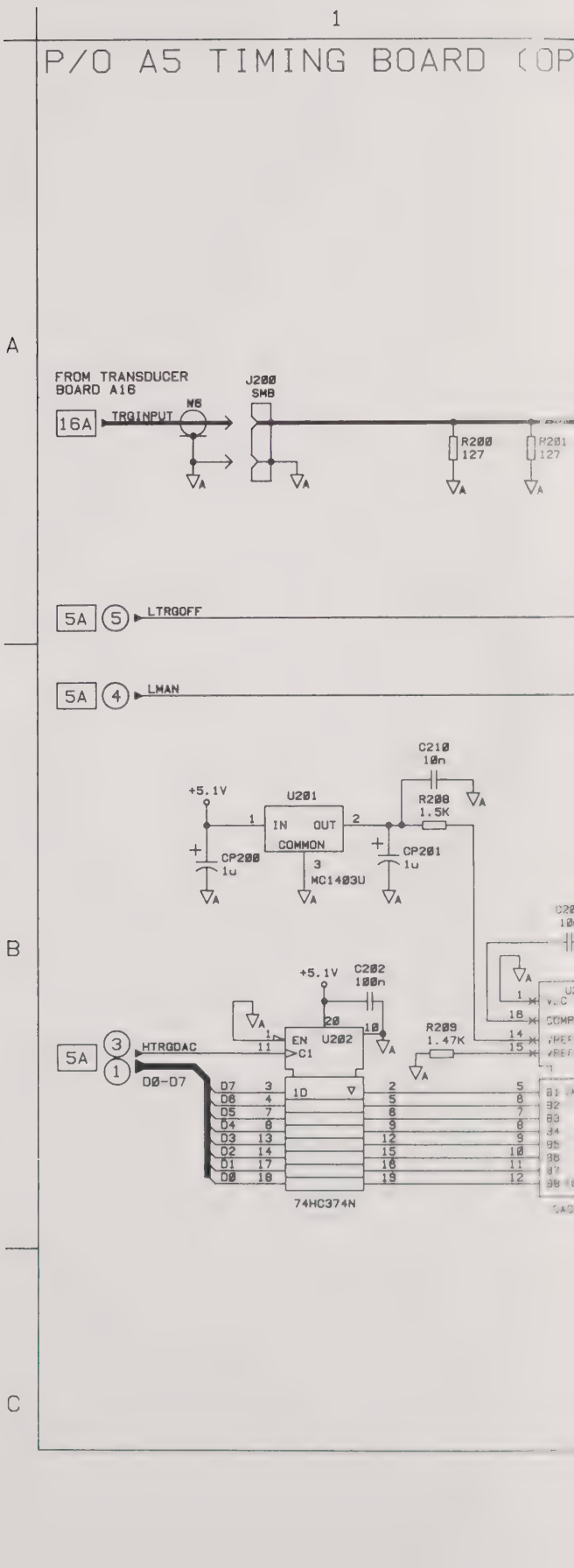
1
P/O A5 TIMING BOARD (OP
A
B
C
FROM TRANSDUCER
BOARD A16
16A
TRGINPUT
W6
J200
SMB
R200
127
R201
127
5A
5
LTRGOFF
5A
4
LMAN
C210
10n
+5.1V
U201
IN
OUT
COMMON
MC1403U
R208
1.5K
CP200
1u
CP201
1u
+5.1V
C202
100n
EN
C1
U202
R209
1.47K
5A
3
1
HTRGDAC
D0-D7
D7
D6
D5
D4
D3
D2
D1
D0
1D
74HC374N

T.020)

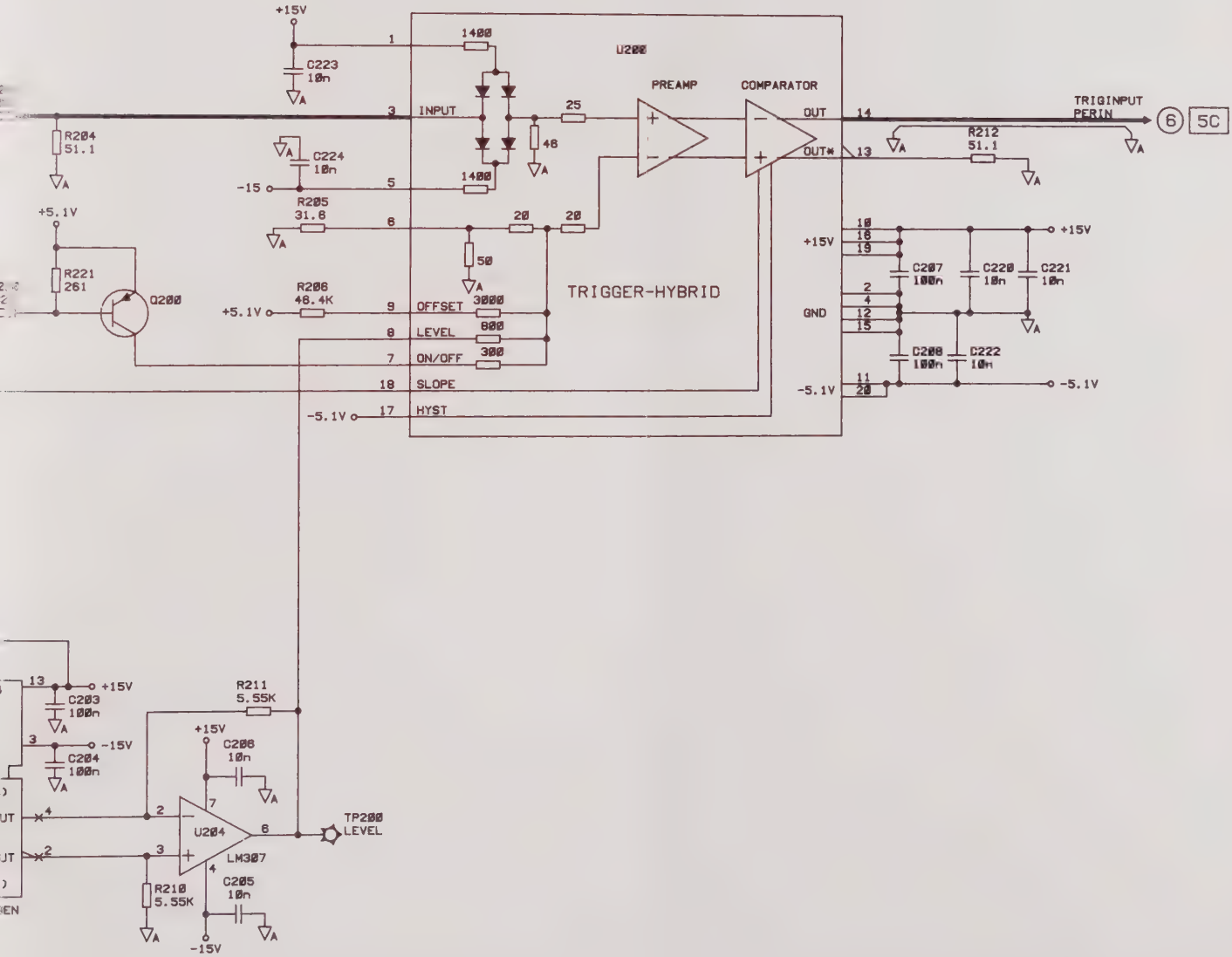

MODEL HP8131A
FIGURE 6.4-41.
OPT.020 TIMING BD SCHEMATICS
(SHEET 2 OF 12)

5B

P/O A5 TIMING BOARD (OPT.020)

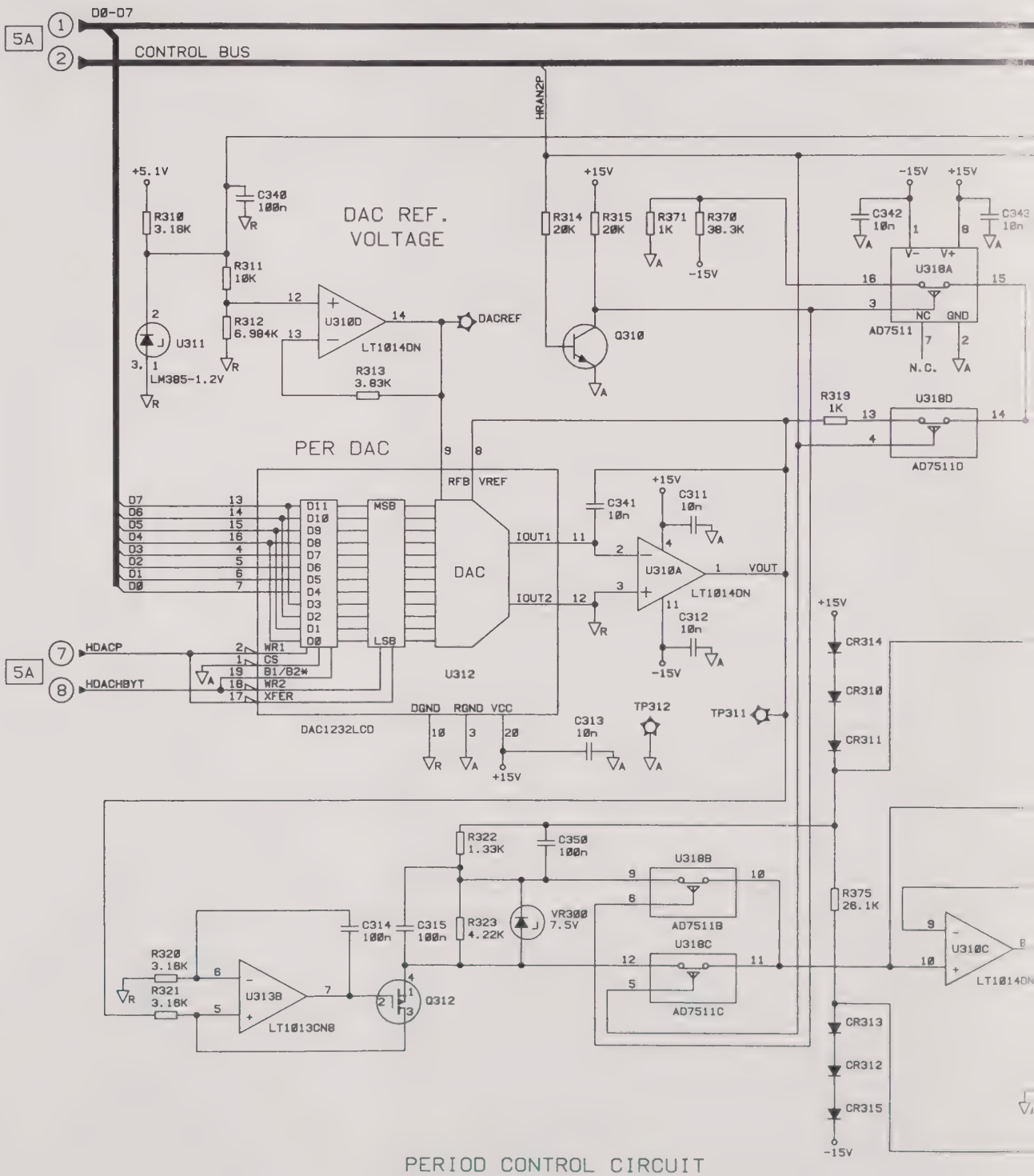

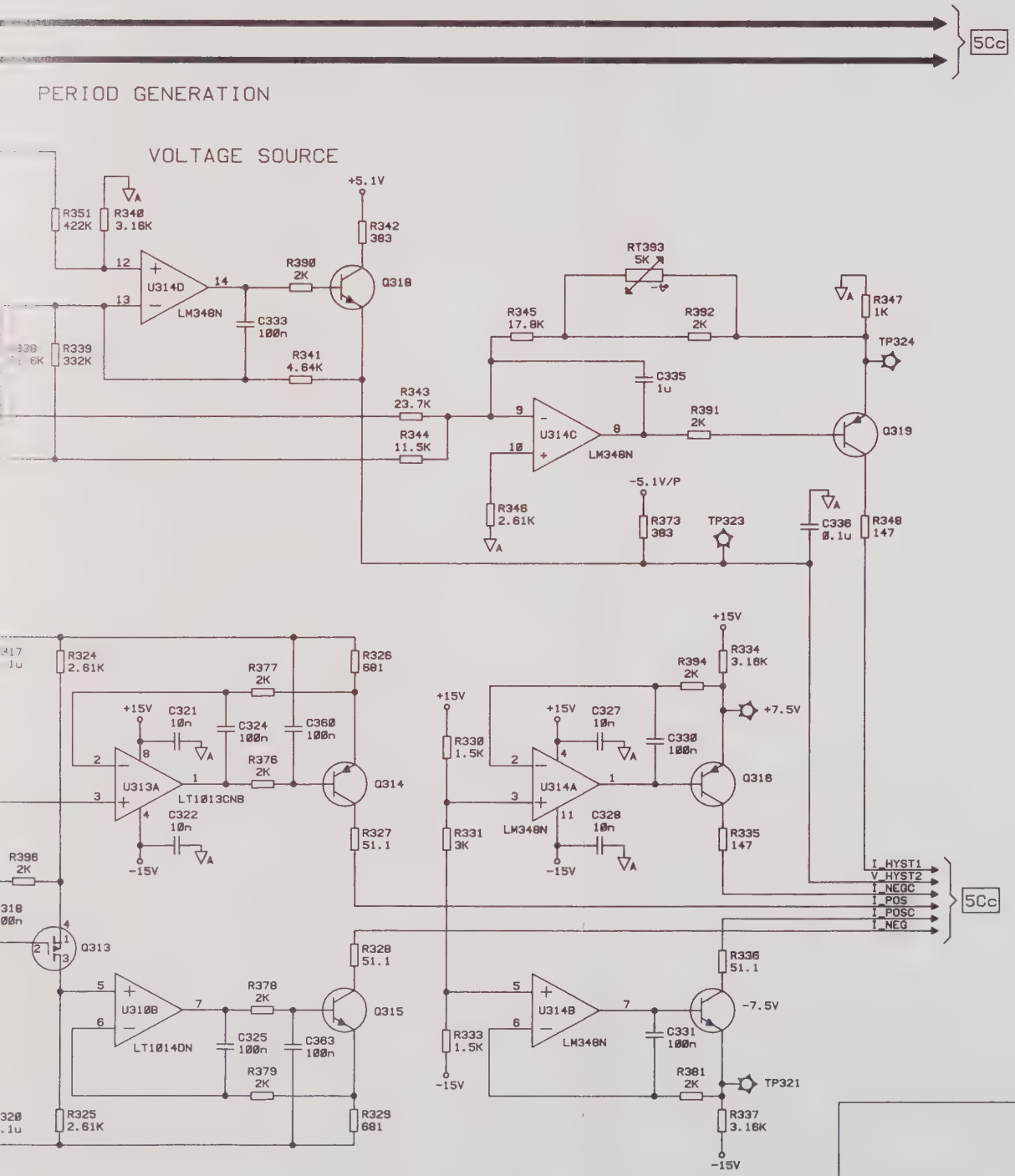

5C

MODEL HP8131A
FIGURE 6.4-42.
OPT.020 TIMING BD SCHEMATICS
(SHEET 3 OF 12)

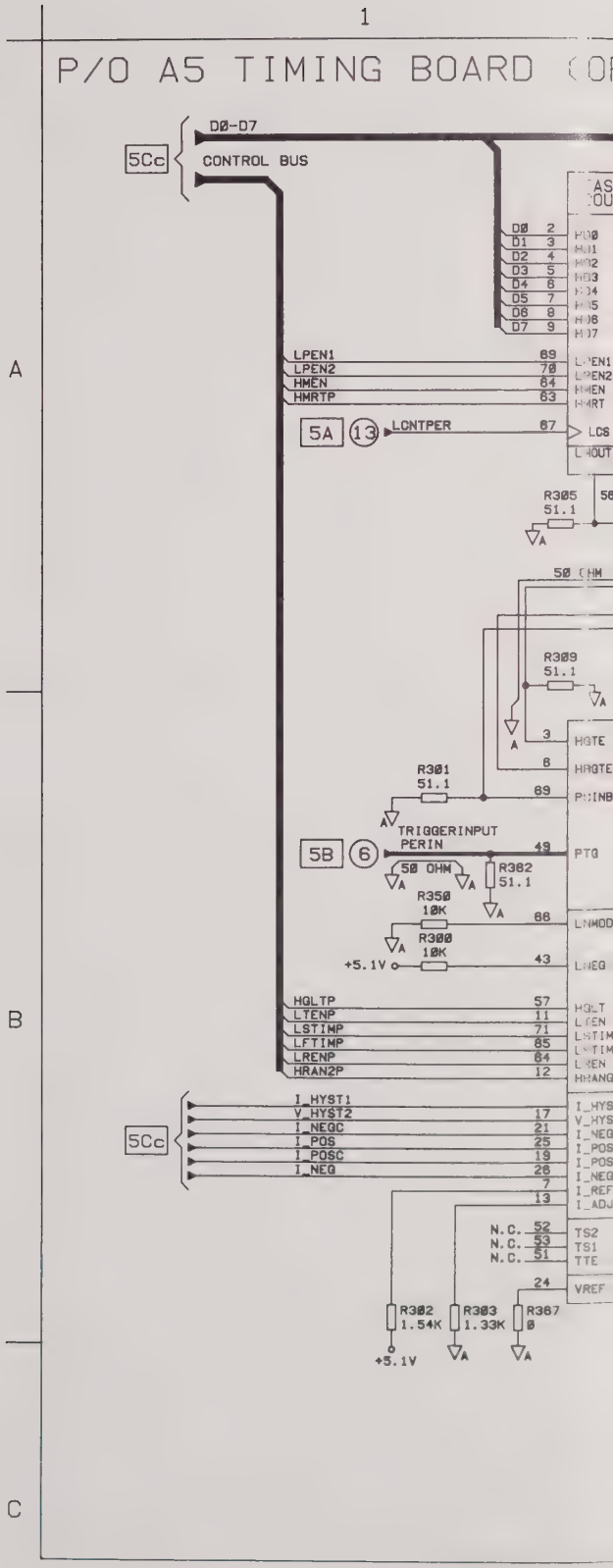
1
P/O A5 TIMING BOARD
A
B
C
D0-D7
5Cc
CONTROL BUS
LPEN1
LPEN2
HMEN
HMRTP
5A 13 LCNTPER
R305 51.1
50 OHM
R309 51.1
R301 51.1
TRIGGERINPUT
PERIN
5B 6
50 OHM
R382 51.1
R350 10K
R300 10K
+5.1V
HGLTP
LTENP
LSTIMP
LFTIMP
LRENP
HRAN2P
I_HYST1
V_HYST2
I_NEGC
I_POS
I_POSC
I_NEG
N.C.
N.C.
N.C.
TS2
TS1
TTE
VREF
R302 1.54K
R303 1.33K
R307 0
+5.1V

.020)

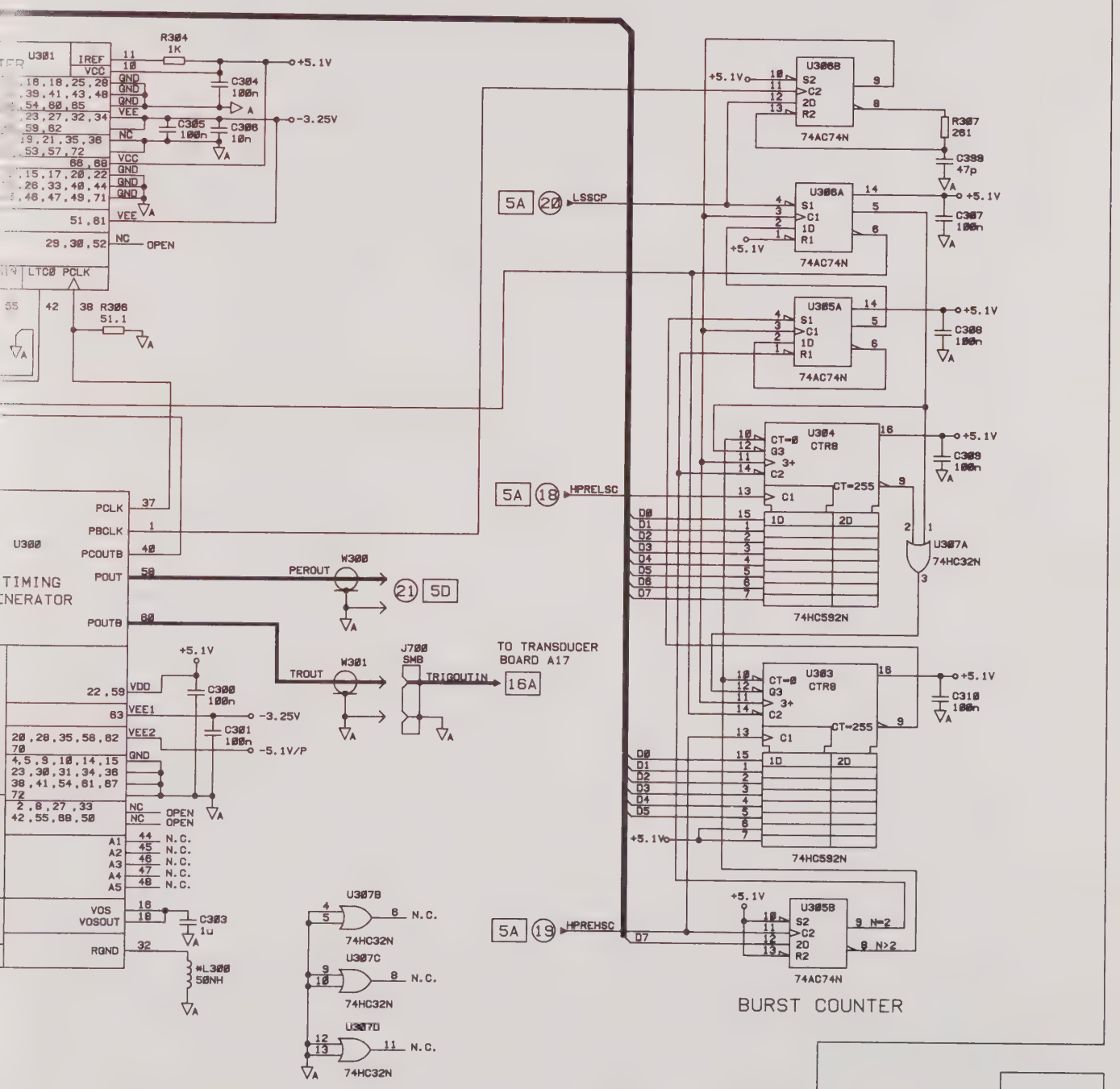

MODEL HP8131A
FIGURE 6.4-43.
OPT.Ø2Ø TIMING BD SCHEMATICS
(SHEET 4 OF 12)

5C

P/O A5 TIMING BOARD (OPT.020)

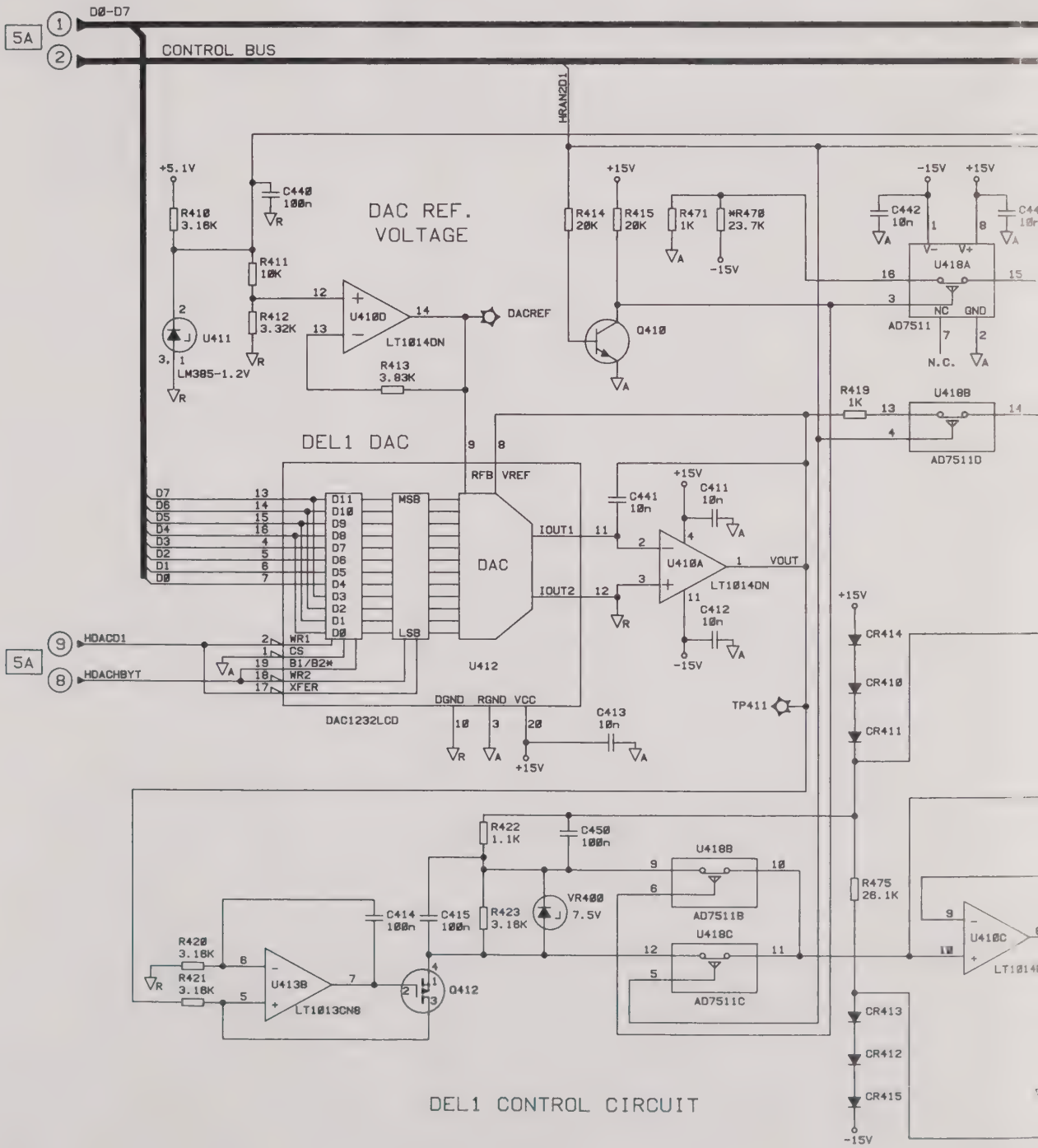

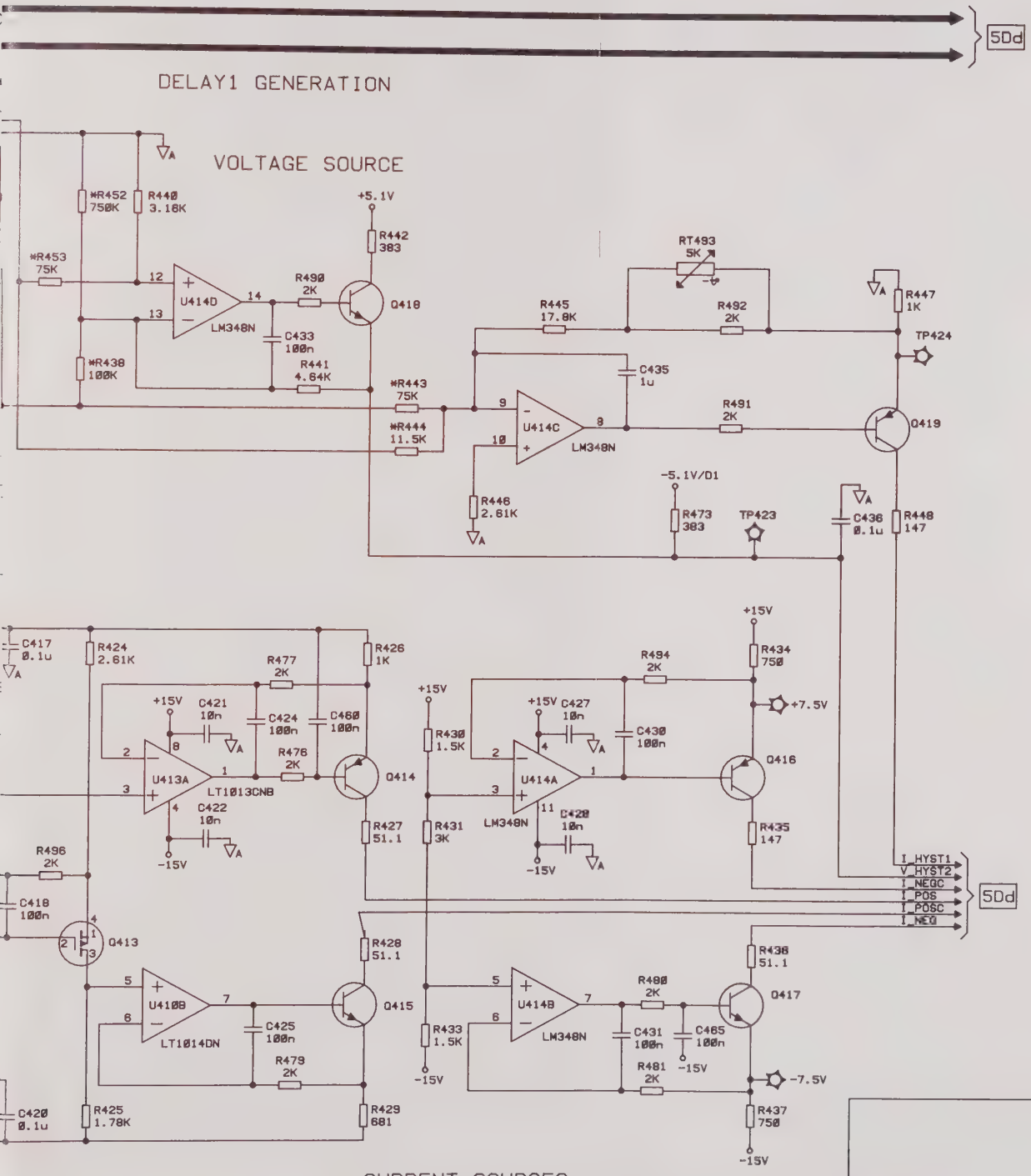

5D

MODEL HP8131A
FIGURE 6.4-44.
OPT.020 TIMING BD SCHEMATICS
(SHEET 5 OF 12)

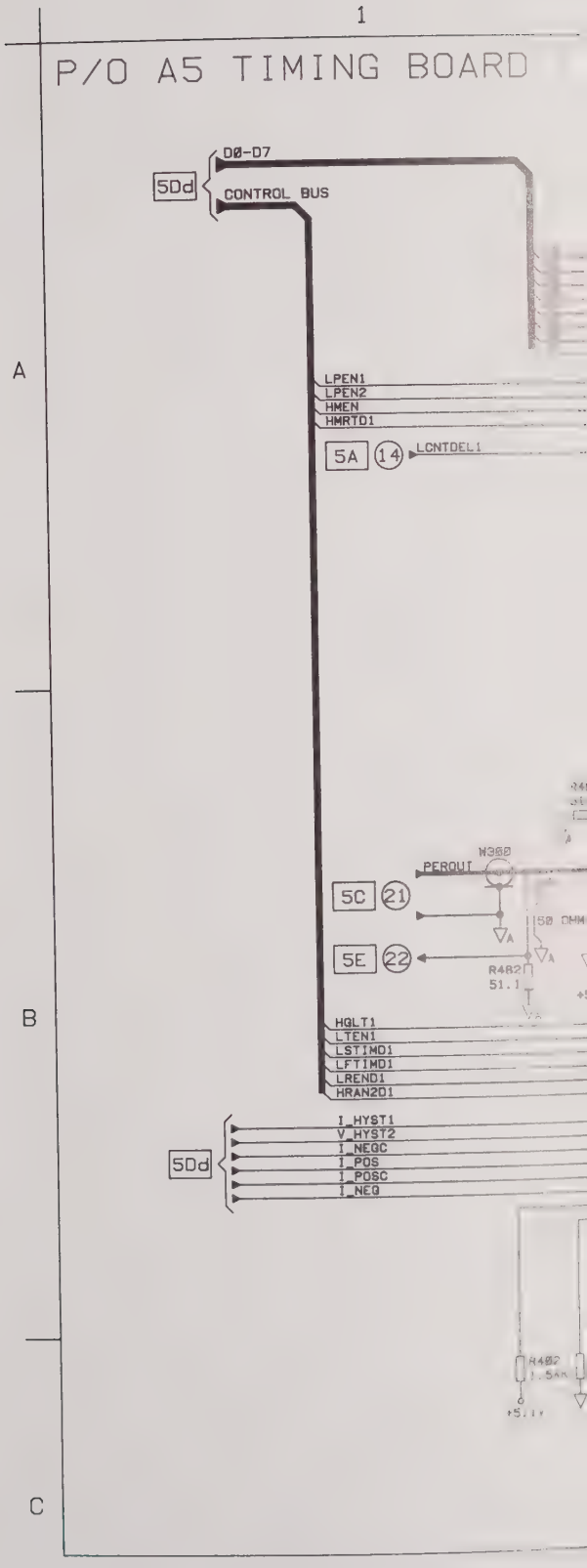
1
P/O A5 TIMING BOARD
A
B
C
D0-D7
5Dd
CONTROL BUS
LPEN1
LPEN2
HMEN
HMRTD1
5A
14
LCNTDEL1
W360
PEROUT
5C
21
50 OHM
5E
22
R482
51.1
HBLT1
LTEN1
LSTIMD1
LFTIMD1
LREND1
HRAN2D1
I_HYST1
V_HYST2
I_NEGC
I_POS
I_POSC
I_NEG
5Dd
R480
+5.1V

OPT.020)

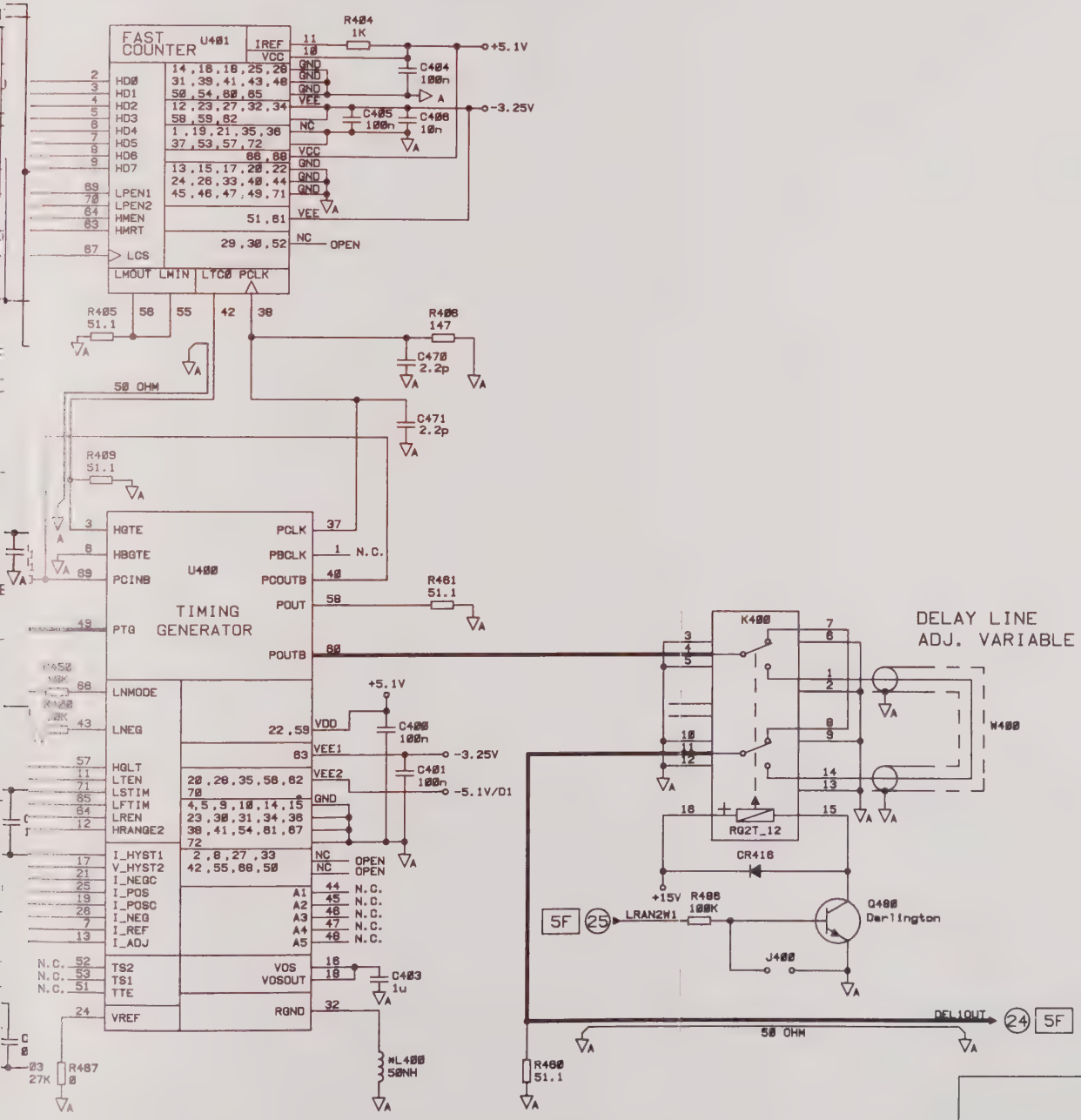

MODEL HP8131A
FIGURE 6.4-45.
OPT.020 TIMING BD SCHEMATICS
(SHEET 6 OF 12)

5D

P/O A5 TIMING BOARD (OPT.020)

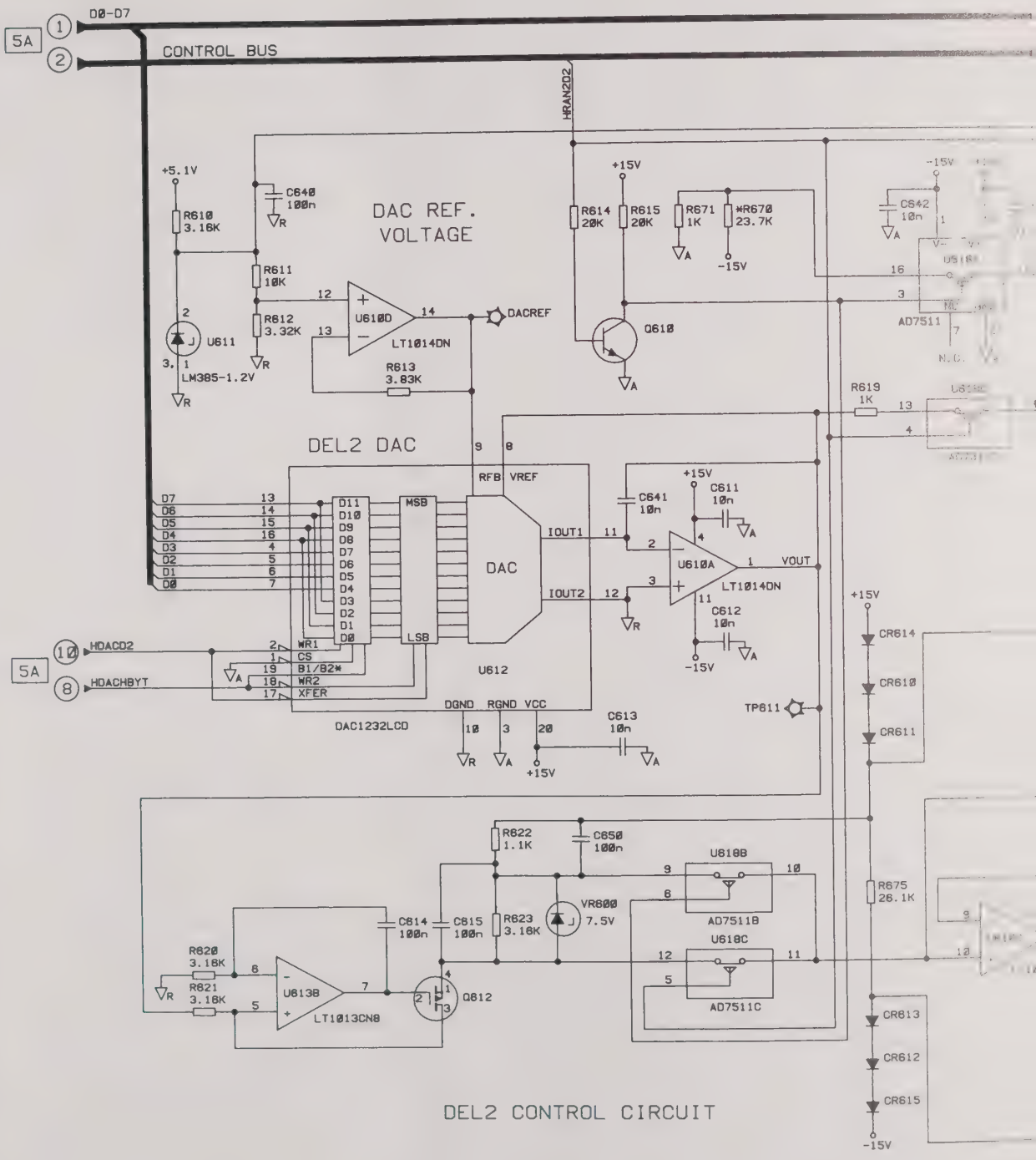

5Ee

DELAY2 GENERATION

VOLTAGE SOURCE

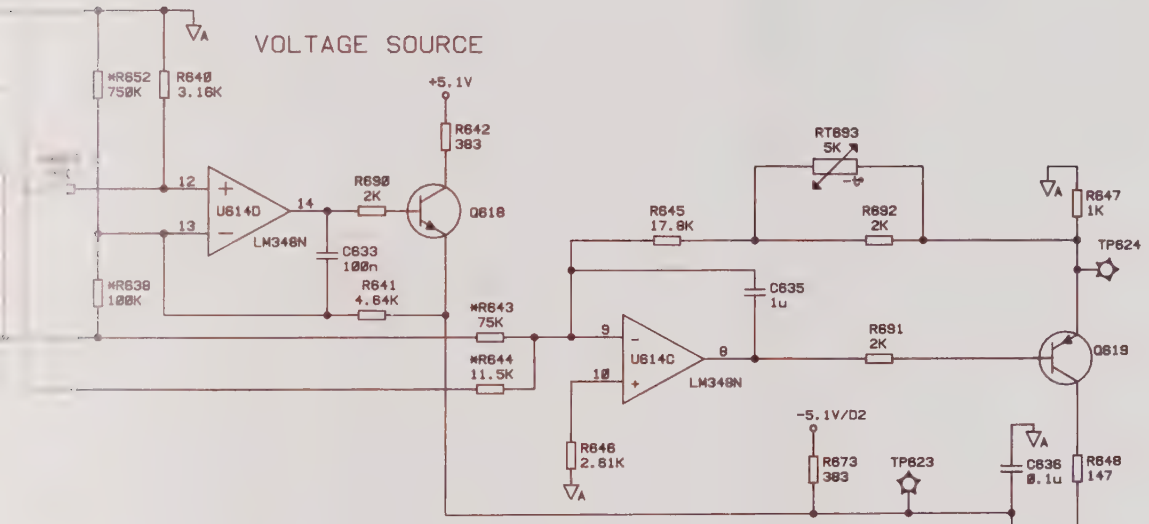

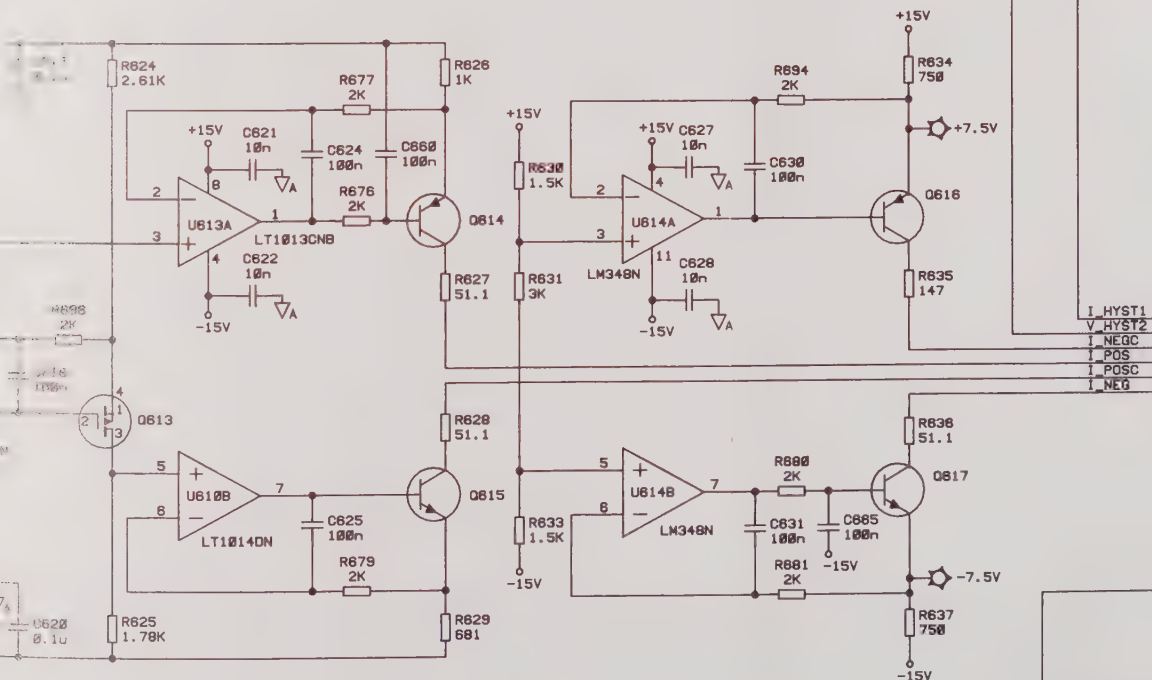

CURRENT SOURCES

5E

MODEL HP8131A
FIGURE 6.4-46.
OPT.020 TIMING BD SCHEMATICS
(SHEET 7 OF 12)
TIMING BOARD (A5)

1
P/O A5 TIMING BOARD
A
B
C
D0-D7
5Ee
CONTROL BUS
LPEN1
LPEN2
HMEN
HMRTD2
5A
15
5D
22
HGLT2
LTEN2
LSTIMD2
LFTIMD2
LRENDZ
HRAN2D2
I_HYST1
V_HYST2
I_NEGC
I_POS
I_POSC
I_NEG
5Ee

)PT.Ø2Ø)

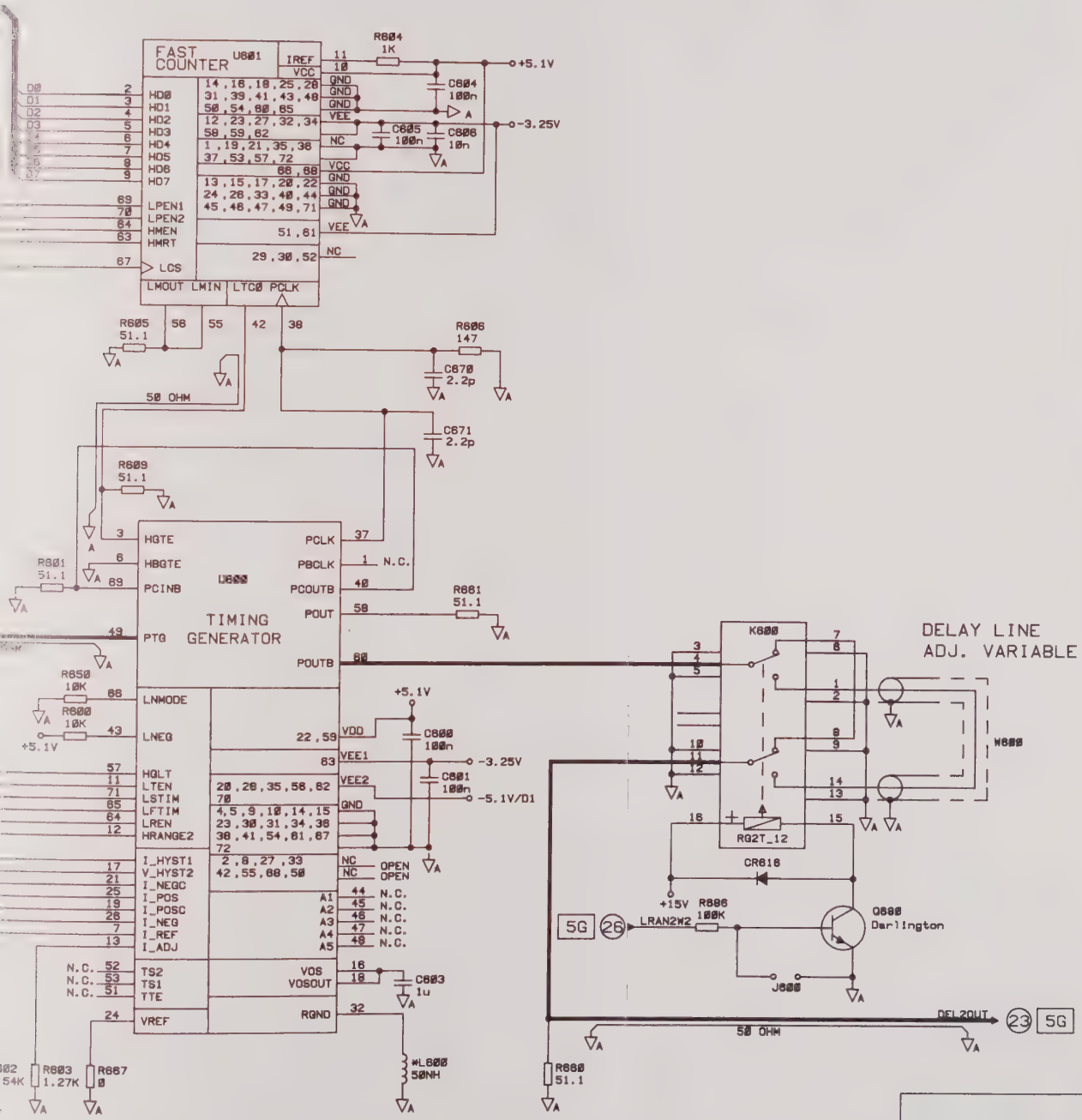

5E

MODEL HP8131A
FIGURE 8.4-47.
OPT.Ø2Ø TIMING BD SCHEMATICS
(SHEET 8 OF 12)
TIMING BOARD (A5) 8.4-97

P/O A5 TIMING BOARD (OPT.Ø2Ø)

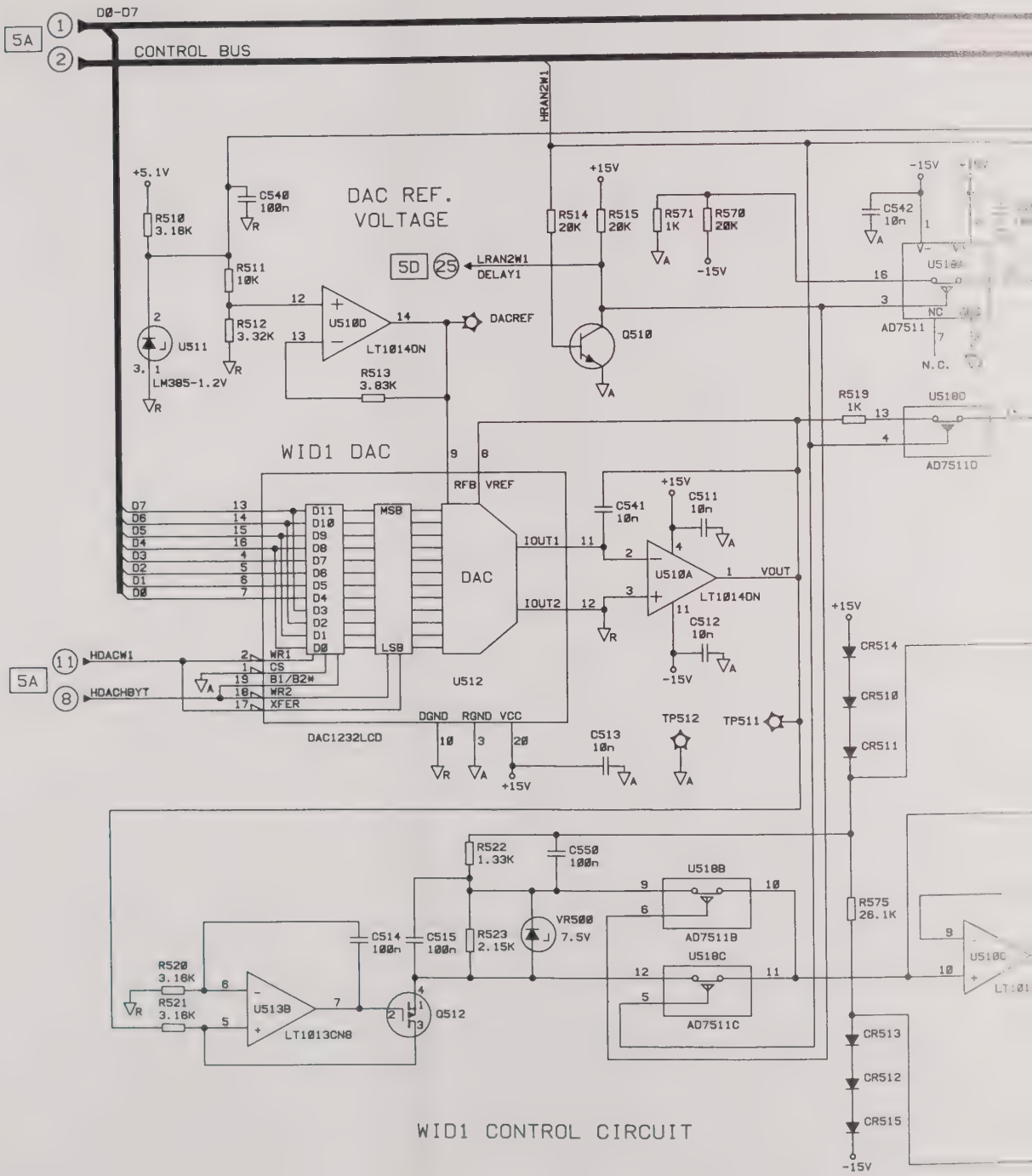

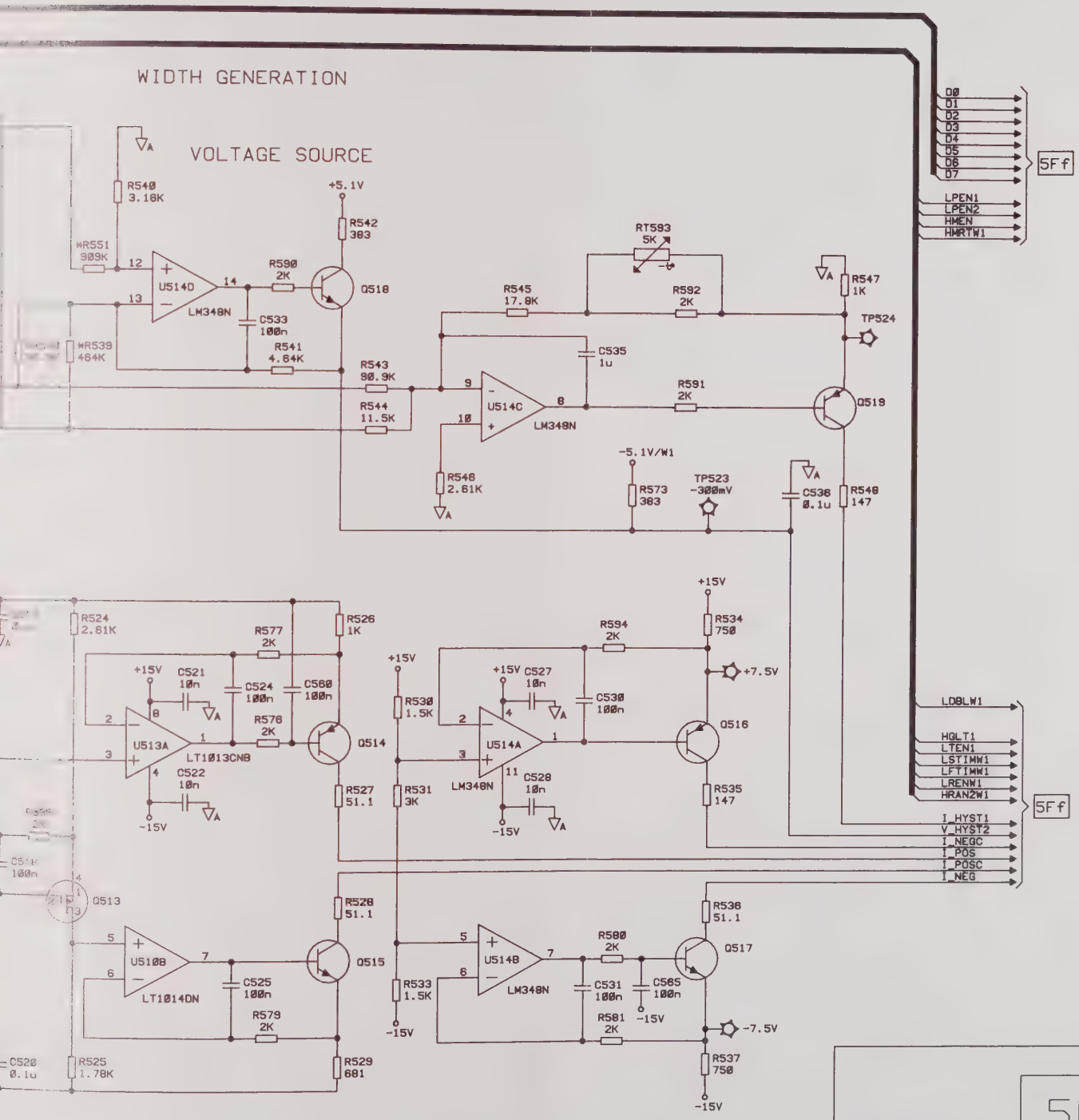

MODEL HP8131A
FIGURE 6.4-48.
OPT.020 TIMING BD SCHEMATICS
(SHEET 9 OF 12)

TIMING BOARD (A5)

5F

P/O A5 TIMING BOARD (OPT.020)

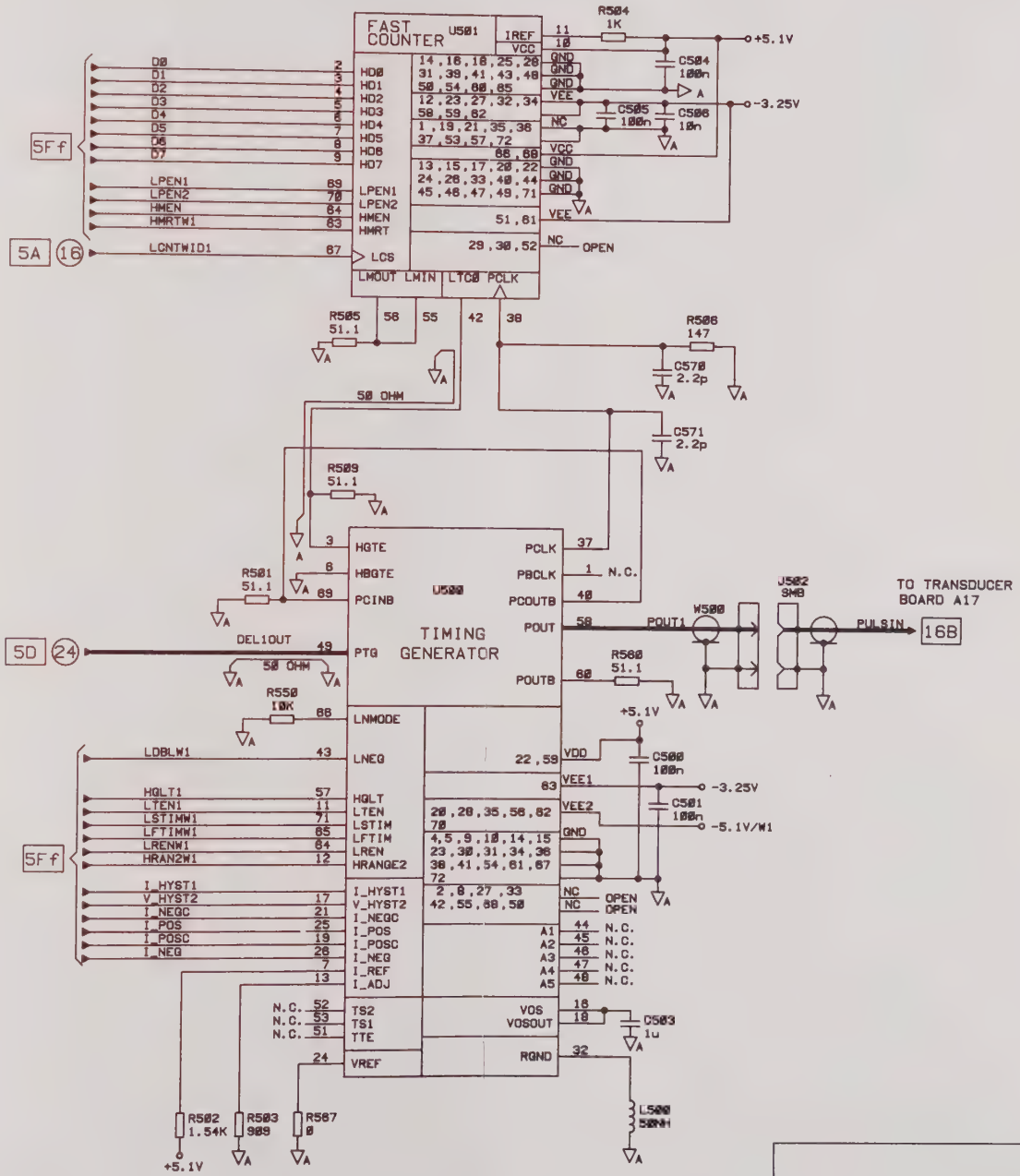

5F

MODEL HP8131A
FIGURE 6.4-49.
OPT.020 TIMING BD SCHEMATICS
(SHEET 10 OF 12)

P/O A5 TIMING BOARD (OPT.020)

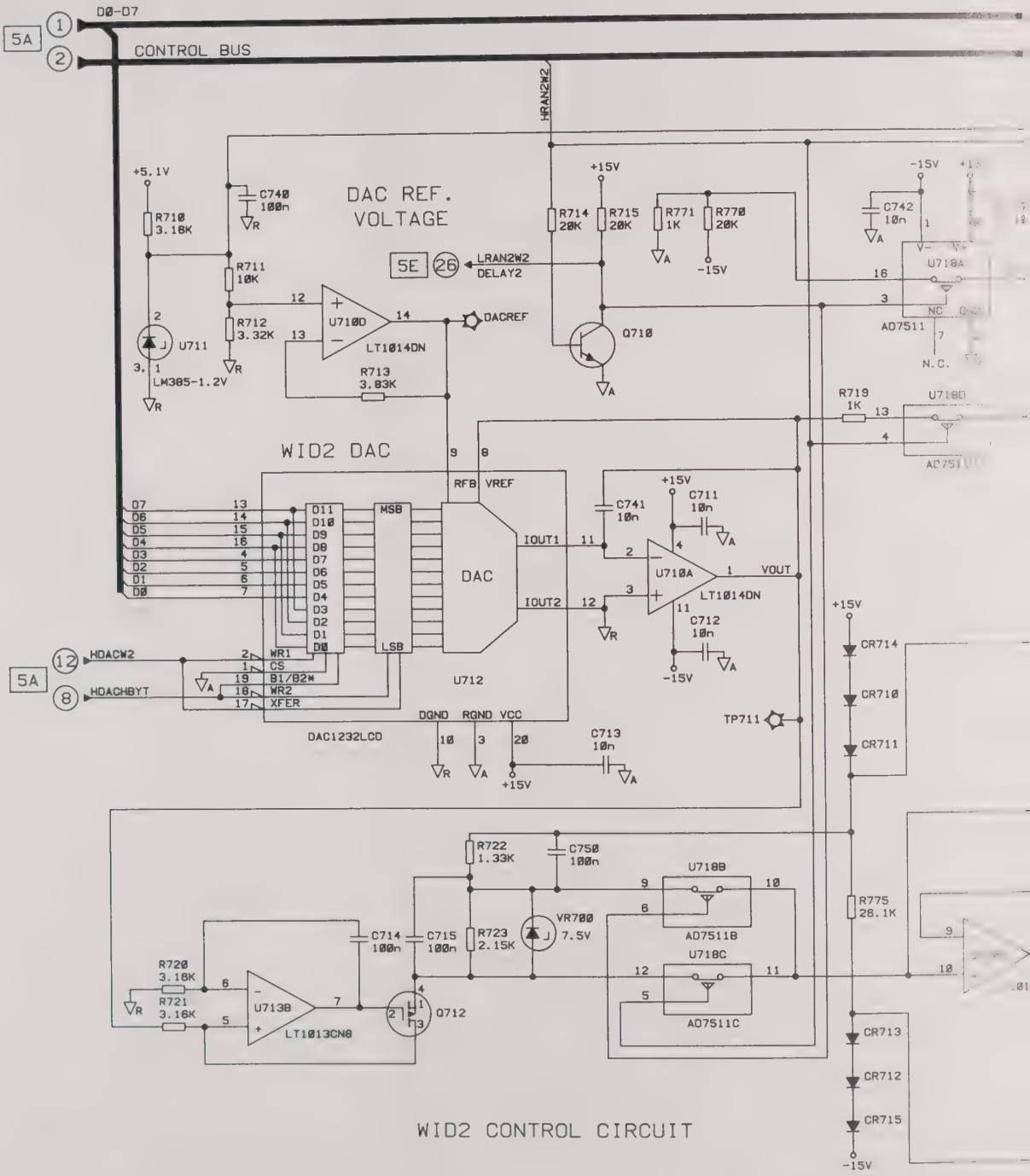

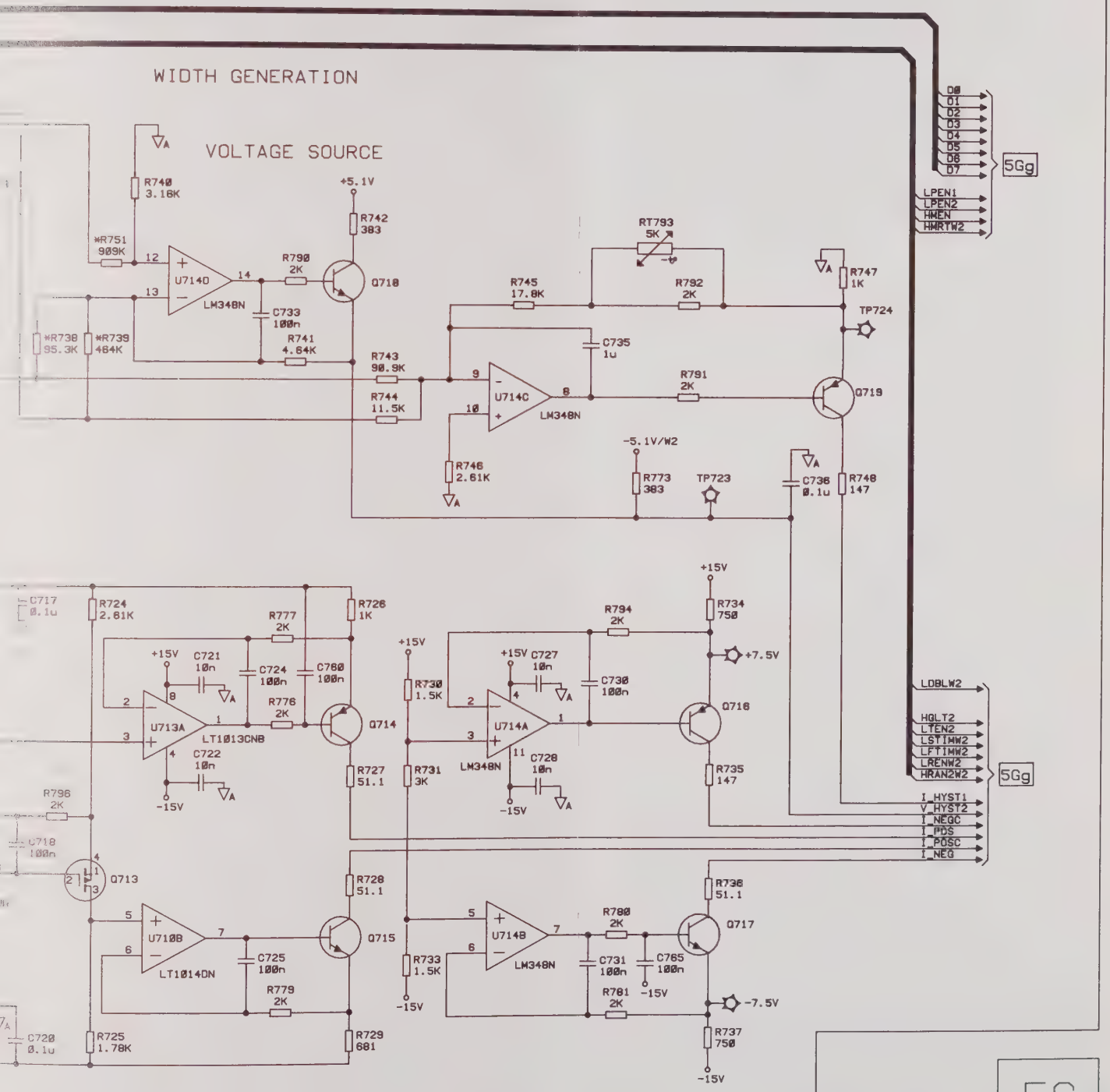

5G

MODEL HP8131A
FIGURE 6.4-50.
OPT.020 TIMING BD SCHEMATICS
(SHEET 11 OF 12)

P/O A5 TIMING BOARD (OPT.020)

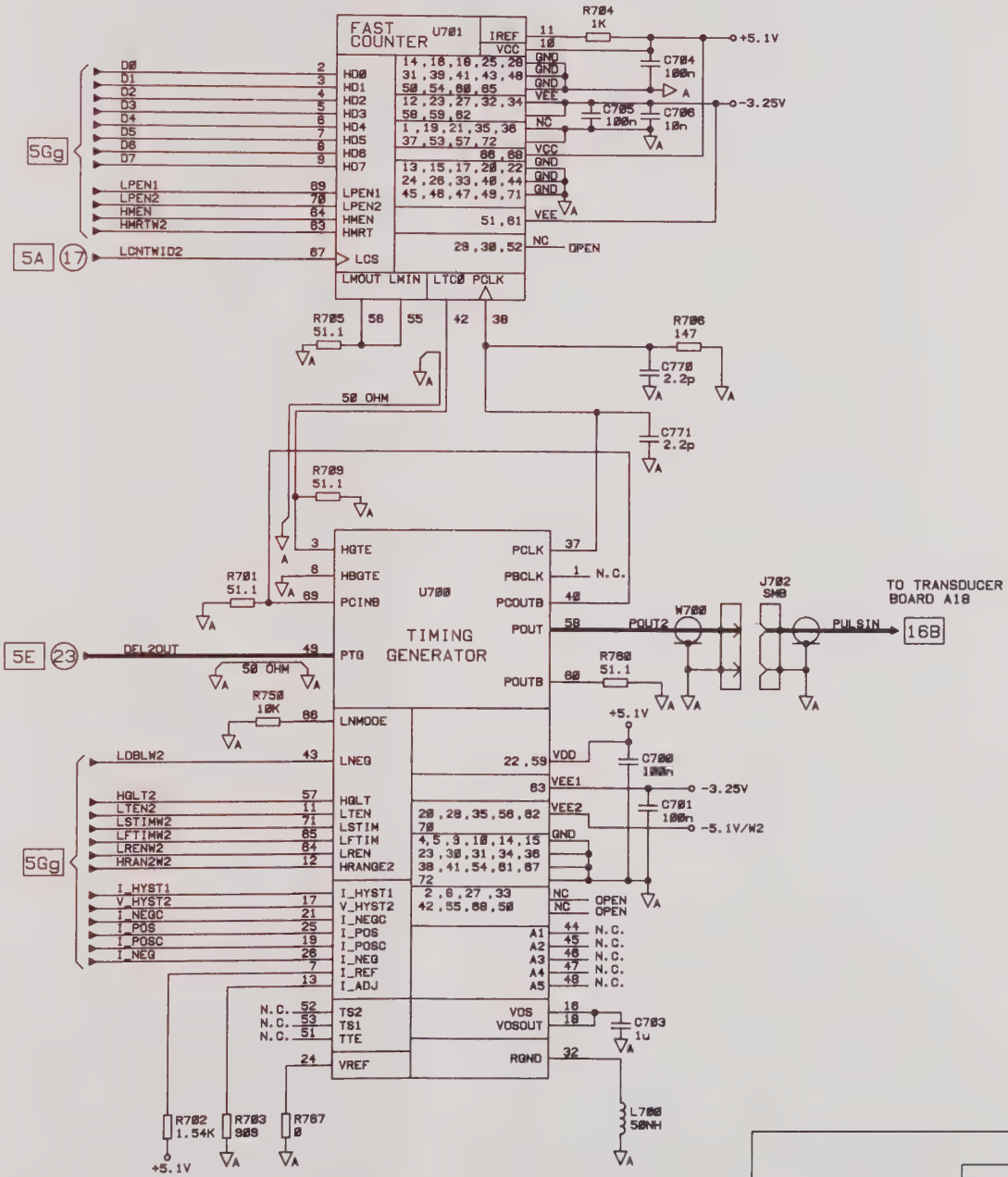

MODEL HP8131A
FIGURE 6.4-51.
OPT.020 TIMING BD SCHEMATICS
(SHEET 12 OF 12)

5G

6-5

HP 8130A Output Board (A26; option 020 - A27)

Block Theory of Operation

Introduction

This section provides a basic block level theory of operation. A more detailed theory of operation follows this section.

Slope Generation

The main function of the output board is slope generation, the resultant output is passed to the output amplifier. The slope generator circuit is divided into four main blocks:

- input buffer
- fast slope generator and slow slope interface
- slow slope generator
- level shift and impedance converter

The purpose of the slope generator is to generate a signal which combines stable amplitude with variable rise and fall times. The incoming signal from the timing board is single ended and has an EECL format.

The output signal to the output amplifier has programmable rise and fall times from 600 ps to 100 μs. Output amplitude can be adjusted between 1.5 V to 1.8 V.

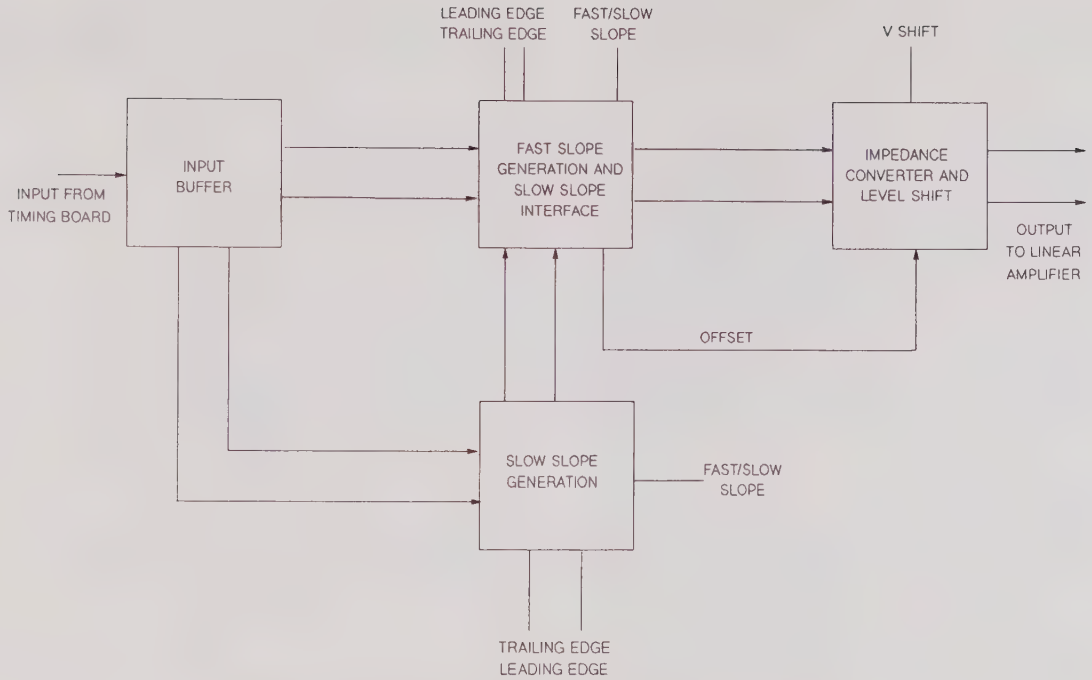

Figure 6-5-1. Slope Generator Module Block Diagram

Output Amplifier

The output amplifier and offset generator are used to amplify the slope generator output signals to the required level. They are also used to add the necessary output offset as determined by the HIL and LOL requirements.

To avoid breakdown of the linear amplifier a Gallium Arsenide (GaAs) chip, serving as a cascode and having a breakdown voltage > 10 V, was added to the amplifier outputs.

Fast Slope Generator

The fast slopes are generated by a fully customized GaAs IC. The IC consists of:

- two fully switched directly coupled differential amplifiers
- a diode bridge
- two sense diodes
- two diodes to input the slow slope signal
- source followers at the output

The IC is mounted on a thick film hybrid.

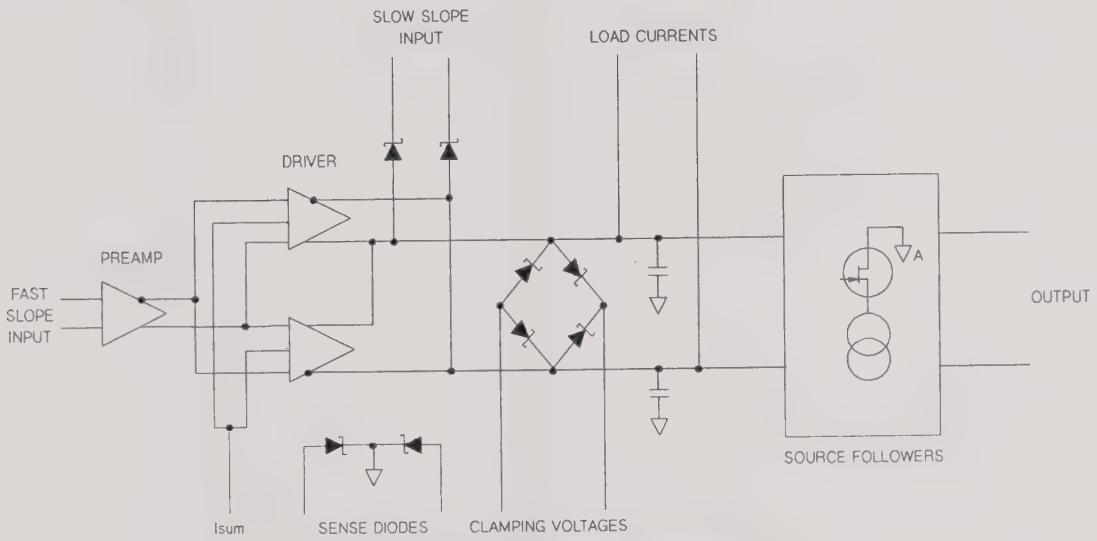

Figure 6-5-2. Fast Slope Generation

The driver consists of two fully switched differential amplifiers connected in parallel and scaled by 1:3. For slopes below 2 ns, both differential amplifiers will operate. For transition times between 2 ns and 10 ns, the "small" amplifier will switch the sum of the load currents. Slower transition times are generated on the board and both amplifiers are turned off.

Theory of Fast Slope Generation

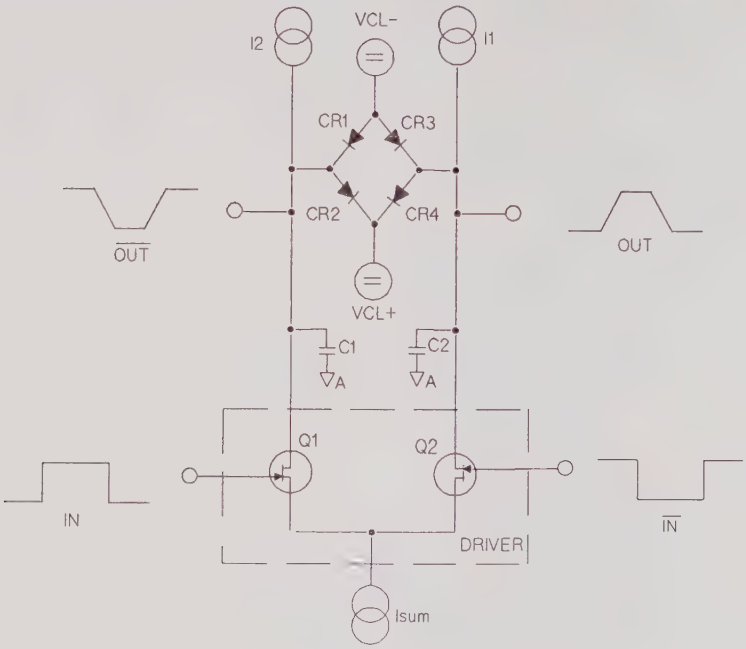

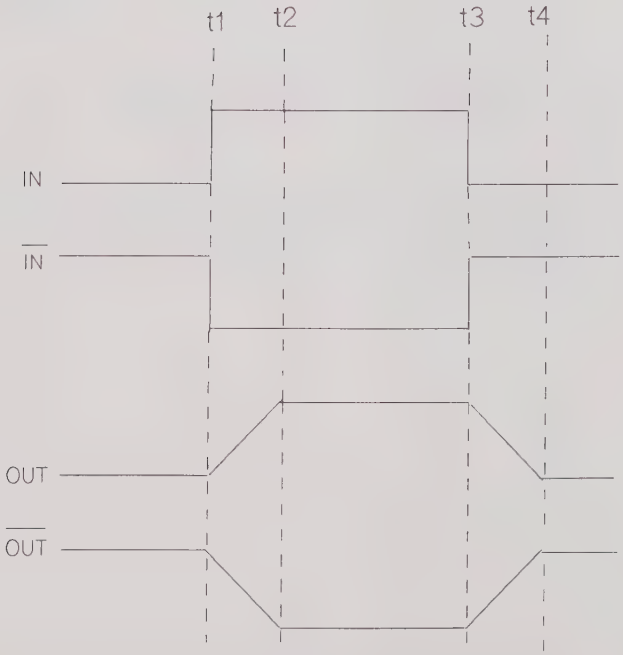

Figure 6-5-3. Fast Slope Theory of Operation

Currents I1 and I2 determine the leading and trailing edge of the slopes respectively; Isum being the sum of I1 and I2. As shown in the Figure above, at time t1 Q1 turns ON and Q2 turns OFF. The constant current discharging from C1 being determined by:

$$I(C1)[t1,t2] = I2 - Isum$$
$$= -I1$$

This provides the slopes of $\overline{OUT}$ from t1 to t2. Once the voltage has dropped to the level at t2, CR1 starts to conduct and prevents the voltage at $\overline{OUT}$ from falling any further. The clamping voltage is:

$$V(\overline{OUT})[t2;t3] = VCL- - VCR1$$

Where VCR1 is the forward voltage across CR1.

At time t3 Q1 turns OFF and Q2 turns ON. Isum flows through Q2 and the current that recharges C1 from t3 to t4 is:

$$I(C1)[t3;t4] = I2$$

At t4 CR2 starts to conduct and prevents the voltage at $\overline{OUT}$ from rising further than:

$$V(\overline{OUT})[>t4] = VCL+ + VCR2$$

A similar procedure to that described above produces the different voltage levels at OUT by:

$$I(C2)[t1,t2] = I1$$
$$V(OUT)[t2;t3] = VCL+ + VCR4$$
$$I(C2)[t3;t4] = -I2$$
$$V(OUT)[>t4] = VCL- - VCR3$$

To obtain an output voltage independent of the forward voltages of the clamping diodes; two further sense diodes, CRI1 and CRI2, have been integrated on the IC. The voltages VCL− and VCL+ are:

$$VCL- = V1 + V(CRI1)$$
$$VCL+ = V2 - V(CRI2)$$

The output amplitude is:

$$Vampl = V2 - V1$$

The differential offset at the output is:

$$Voff = V(CRI1) - V(CRI2)$$

To avoid level shift offset at the input of the linear amplifier, Voff is fed as an additional control signal. The result is that the difference between the shift voltages of OUT and $\overline{OUT}$ is Voff. The output voltage swing is adjustable, from 1.5 V to 1.8 V, by varying the negative clamp voltage.

Slow Slope/Fast Slope Interface

This interface is responsible for feeding the slow slope signal path into the fast slope signal path. It consists of two Schottky diodes (see Figure below). The diodes are reversed biased when the fast slope is in operation; if the fast slopes are not in operation the diodes are forward biased thus enabling the slow slopes. Enabling of the slow slopes causes the driver of the fast slopes to be turned OFF. The load currents I1 and I2 of the fast slope generator are equal, and bias the interface diodes.

Slow Slope Generator

Introduction

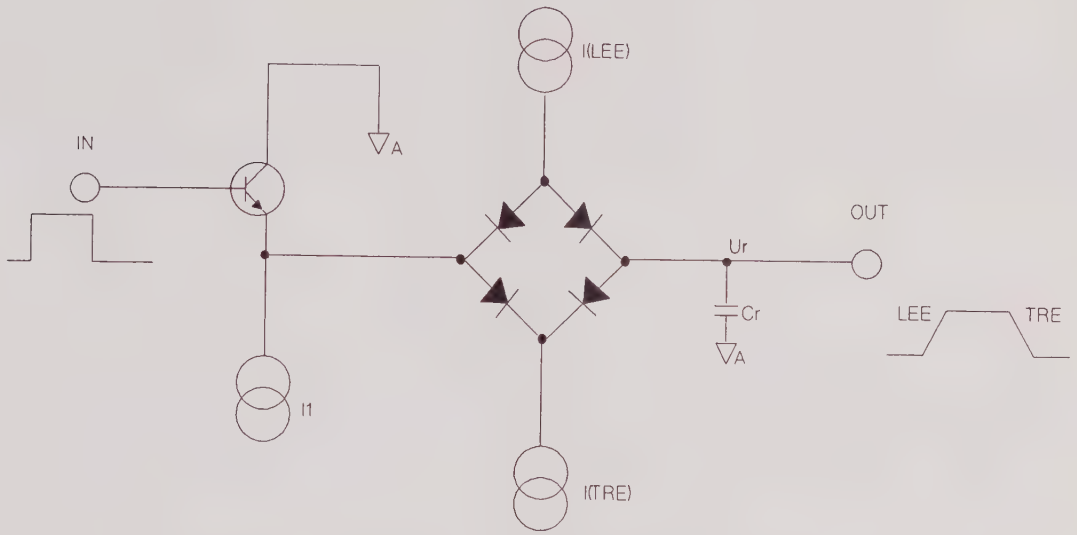

Figure 6-5-4. Basic Slope Generator

Normally, slopes are generated by charging a capacitor with a constant current. Thus, the charging current I(LEE) corresponds to the leading edge (LEE) of a pulse and the discharging current I(TRE) to the trailing edge (TRE).

To avoid overloading the ramp capacitor (Cr), a diode bridge is placed in front. This bridge serves as a switch controlled by the input signal's step and is in balance when voltage Vr has reached its input level. The output of the signal source must have a low impedance to avoid exponential transition times, for this reason an emitter-follower output has been used.

Elimination of Offset

The generated ramp is first decoupled by an impedance converter (see Figure below) to remove any errors caused by leakage and/or base currents.

The ramp is then fed to a differential amplifier with current feedback. Feedback in this stage is large enough to allow linear operation without degrading the slopes. The reference input of the differential amplifier is held at DC. Thus the single-ended input voltage is converted to differential output currents.

Any offset caused by series resistance in the bridge diodes, can be removed by varying I(LEE) and I(TRE). The other input to the differential amplifier, via the second diode bridge, (DC-side) is controlled in a similar manner. The remaining common mode offset at the amplifier inputs will not effect the outputs.

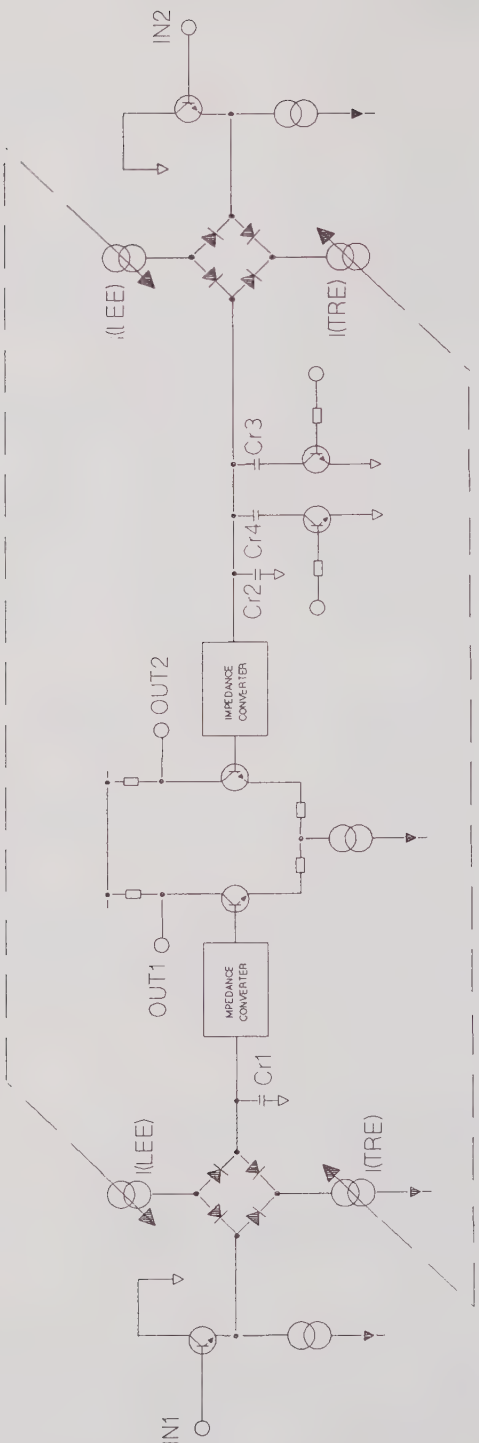

Figure 6-5-5. Elimination of Offset

Minimum Transition at Optimum Performance

To keep parasitics (series inductances, parallel stray-capacitances) low the circuit was engineered in SMD technology.

The time taken for the ramp capacitor, Cr, to be charged by a current I to some voltage V is given by:

$$t = (Cr \times V) \div I$$

All three parameters (Cr, V, and I) contribute to the quality of a ramp.

The ramp can never be faster than the original input signal as this would cause the bridge to balance and the voltage at the ramp node would then follow the input signal. Satisfactory values of the three parameters were found to be:

$Cr = 30$ pF, $V = 2.4$ V, $I = 12.5$ mA which gives

$tr = (0.8 \times 30 \times 2.4) \div 12.5$ ns $= 4.6$ ns

Transitions are measured between 10% and 90% of amplitude, giving a duty factor of 0.8.

The complete slope range of 5 ns to 100 μs is generated by switching additional capacitors. Each successive range is 10 times higher than the previous one, thus the additional capacitor is also 10 times larger. An edge ratio of 1:20 within one range, can be achieved by setting the load currents to a ratio of 1:20, this leads to an overlap of the ranges by a factor of two.

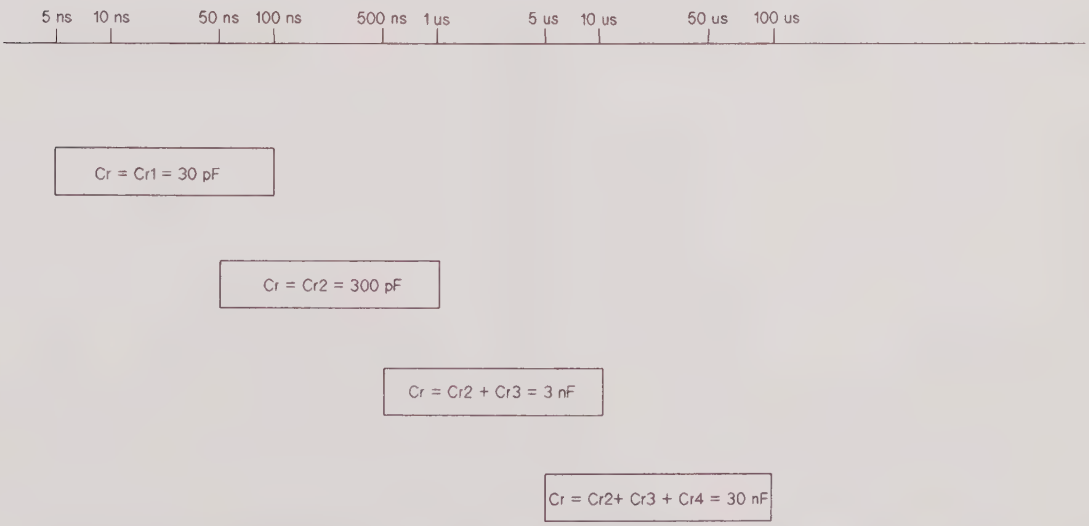

Figure 6-5-6. Slow Slope Range Assignment and Associated Ramp Capacitance

The additional capacitors are switched into the circuit by transistors. To keep the parasitic part of the residual ramp capacitor as low as possible the switches are connected at a non-sensitive node, namely the second diode bridge.

Slopes from 5 ns to 100 ns have the input signal applied to the slope generator's fast input, IN1, keeping the slow input, IN2, at DC. Slopes from 50 ns to 100 μs have the input signal applied to IN2 with IN1 kept at DC. Additional range switching is done at the slow input IN2.

Capacitive Step

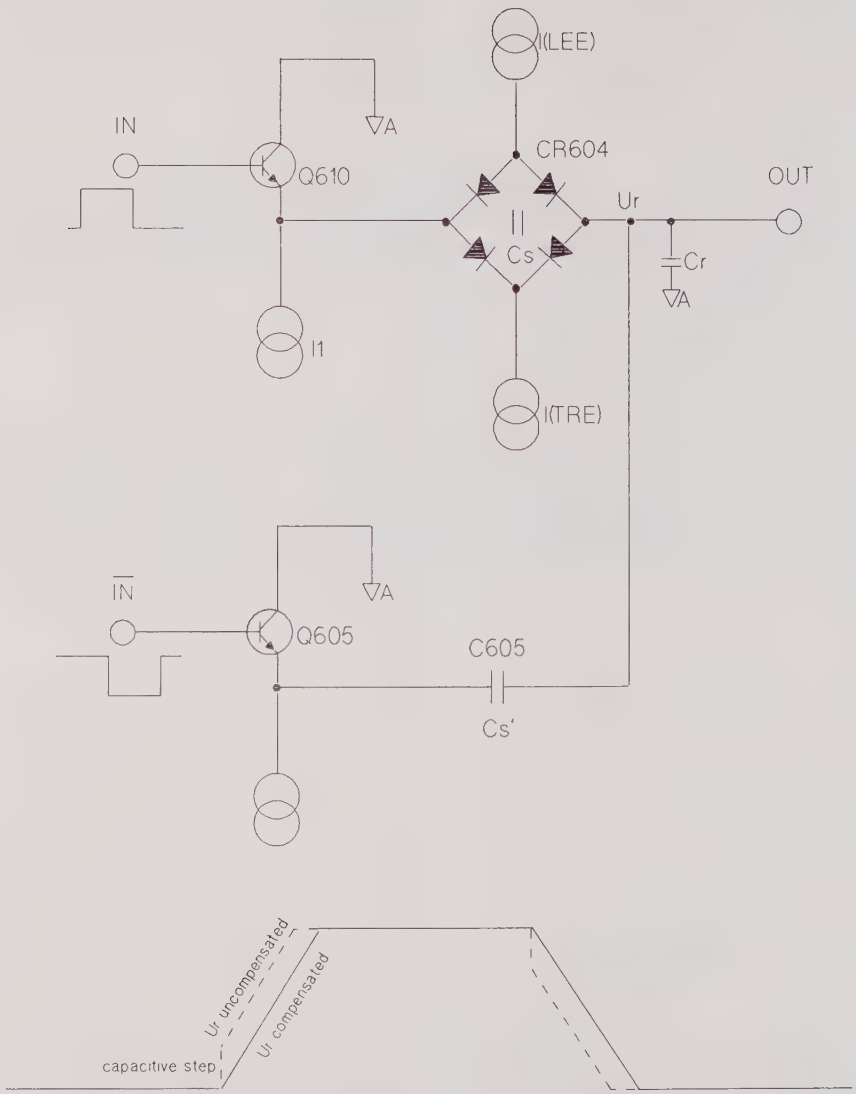

Figure 6-5-7. Compensation for Capacitive step

The diode bridge has across it some parasitic capacitance caused by the capacitance of each diode and the stray capacitance of the board. This capacitance causes the step as shown by the above Figure and is given by:

$$Vc = [Cs \div (Cs + Cr)] \times Vin$$

Suitable values are: Cs = 3 pF, Cr = 30 pF ==> Vc = 10% of Vin

To compensate for this effect the complement input signal is coupled directly to the ramp node via a capacitor having the same value as Cs.

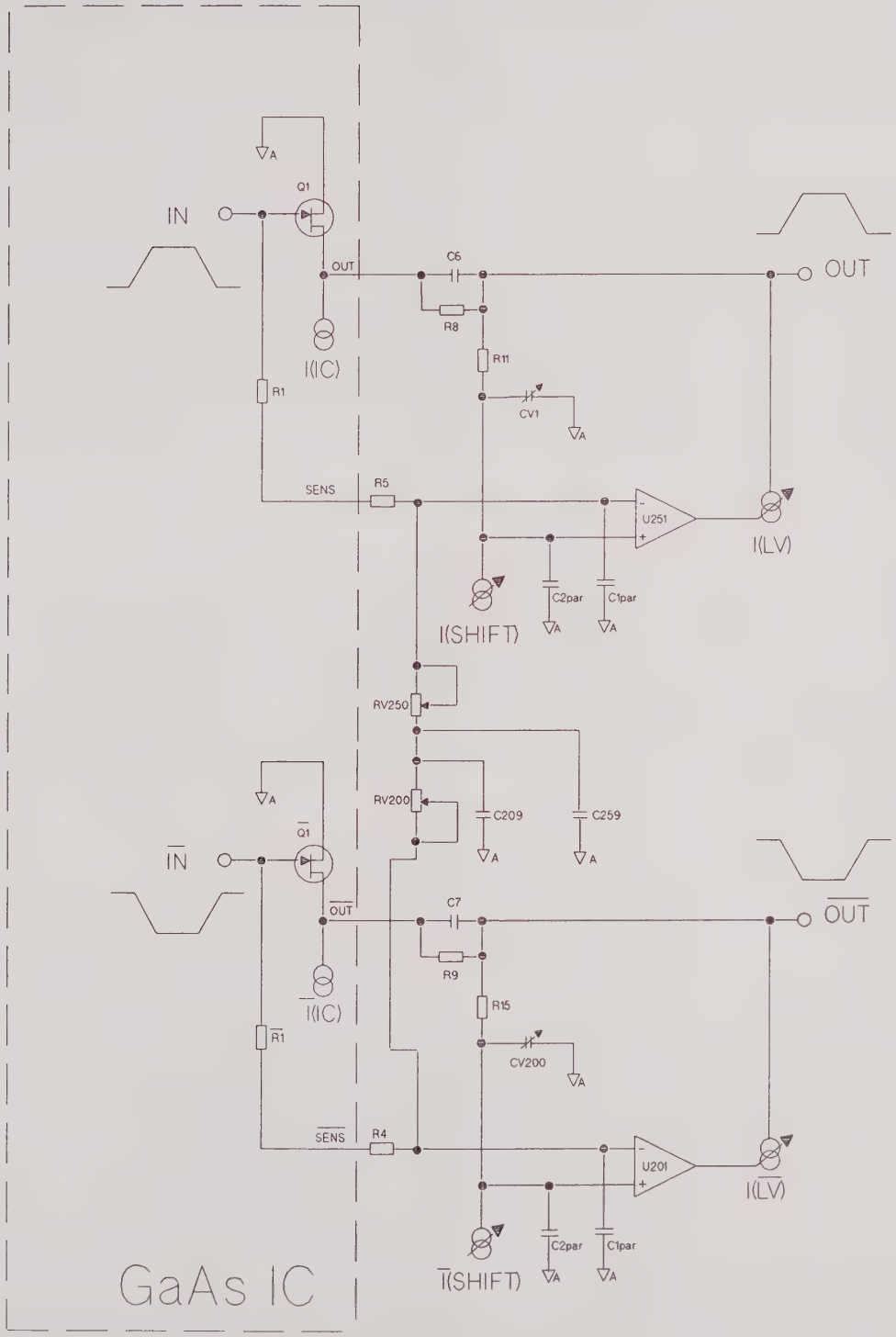

Figure 6-5-8. Level Shift

Because the output amplifier is floating a level shift with a variable shift voltage was required. The input to the Level Shift is an FET used as a source follower. In order to achieve stable working conditions most of the source current flows through the on-chip current source. The current through R8 can be adjusted to provide variable shift voltages. The shift voltage is given by:

$$\begin{aligned} \text{Vshift} &= \text{V(R8)} + \text{VGS(Q1)} \\ &= \text{I(shift)} \times \text{R11} \end{aligned}$$

The voltage drop across R1 and R5 can be neglected.

U251 forces a differential input voltage of 0 V at its inputs by controlling the current source, I(LV). The path R1, R5, RV250, RV200, R4, and $\overline{\text{R1}}$ has its input voltage divided by RHFA (RHFA is the Reciprocal of the source follower's High Frequency Amplification factor). This is necessary, otherwise U251 would cause, by varying I(LV), the output swing to equal the input swing at low frequencies. U251 adjusts the low frequency amplification factor to that of the high frequency amplification factor of the level shift. In order to reduce distortions at the frequency at which U251 starts to operate, CV1 has been included in the circuit. It is adjusted to:

$$[\text{R1} + \text{R5}] \times \text{C1par} = \text{R11} \times [\text{C2par} + \text{CV1}]$$

This means the time constants of both the operational amplifier inputs are equal.

C1par and C2par represent the parasitic capacitance caused by the board, U251, the hybrid and the current source. Because (R1 + R5) is larger than R11, an additional capacitor is always necessary at the negative input of U251 to equalize the time constants. C6 was necessary to reduce the dynamic output resistance at high frequencies. R1 was needed to decouple the signal path at high frequencies and to avoid parasitic oscillations. Because R1 on the IC varies with temperature an additional resistor, R5, ten times larger, was necessary to make RHFA more stable.

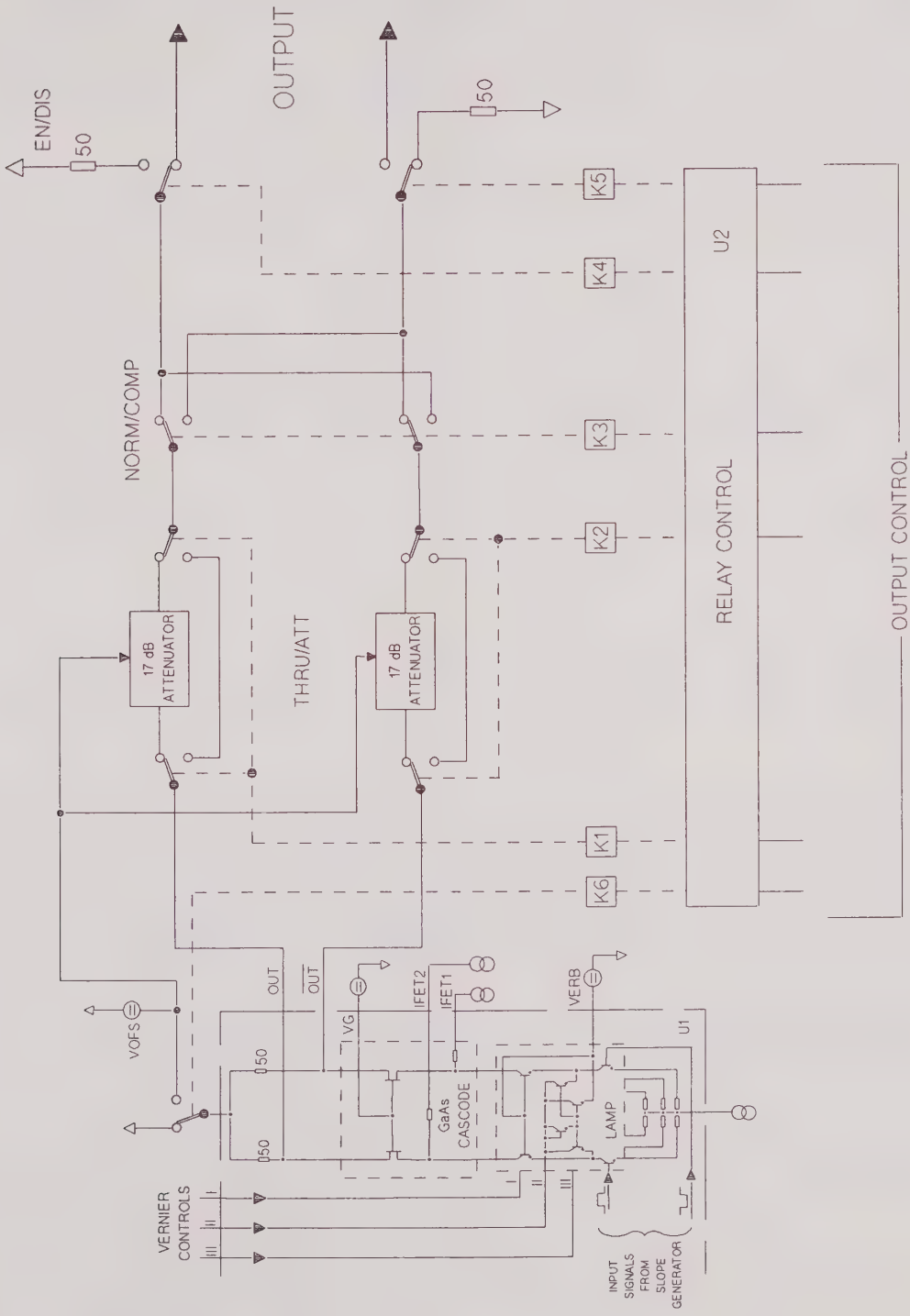

Figure 6-5-9. Output Amplifier Block Diagram

Introduction

The output amplifier and offset generator are used to amplify the slope generator's output signals to the required level. They are also used to add the necessary output offset as determined by the HIL and LOL requirements.

To avoid breakdown of the linear amplifier a GaAs chip, serving as a cascode and having a breakdown voltage > 10 V, was added to the amplifier's outputs.

Linear Amplifier

The linear amplifier is responsible for generating the signals that appear at the instrument's output terminals.

Current Handling at Speed

The output pulses must be input to a 50 Ω external load in parallel with a 50 Ω back termination in the instrument. This means the amplifier must be able to produce output current swings of up to 200 mA. The additional offset (up to 5 V) can be generated by adding an offset voltage at the common node of the back termination. Thus, the IC only has to deal with the pulse part of the instrument's output.

Just as in earlier HP pulse generators, the HP 8130A's output amplifier is configured as a transconductance amplifier, i.e. turning an input voltage into an output current.

Amplitude Variation Range

The linear amplifier is configured as an emitter-degenerated differential pair with a two-quadrant multiplier cell on top (see figure below). Its output amplitude is varied by sourcing a DC current into the multiplier cell's control input port, Iv. Any current fed into Iv is subtracted from the differential pair's collector currents on their way to the outputs OUT and $\overline{\text{OUT}}$.

Three binary-weighted amplifier/multiplier combinations are used in parallel. Each one runs at a gain of either 0 (OFF) or about 1/3 (ON). Their currents are 4/7, 2/7 and 1/7 of the 200 mA total. All three together cover amplitudes of 5 V to 2.16 V.

If the largest amplifier is switched off, amplitudes of 3/7 x 5 V = 2.15 V to 0.72 V are obtainable; with only the smallest one switched on amplitudes of 5 V/7 = 0.71 to 0.3 V are obtainable. An external attenuator produces the amplitudes down to the minimum amplitude of 0.1 V.

Amplitude/multiplier stages are switched OFF by sourcing enough current into their multiplier's control inputs to make their gain equal to 0.

Differential Amplifier.

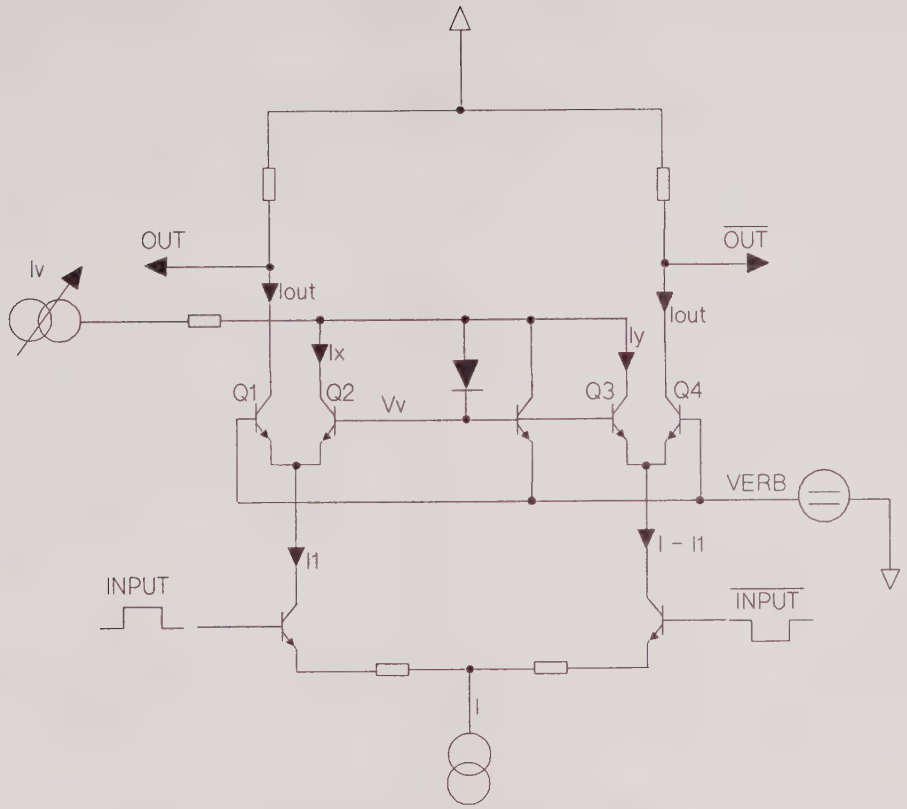

Figure 6-5-10. Differential Amplifier

In a differential amplifier the current flowing in each collector is proportional to the potential difference between the two bases. Thus, by varying the potential Vv on the base of one of the transistors, the current Iout can be controlled. However, because of the characteristic of the base-emitter voltage of each transistor, the attenuation has a logarithmic characteristic.

The input signal controls the share of current source I, which flows through each input transistor. Similarly, Vv controls the current in both attenuator transistors Q1, Q2 or Q3, Q4.

Suppose that Vv sets an attenuation factor of 2 and, for simplicity, I = 1 mA. If the input is such that I is shared equally, then I1 = 0.5 mA and I − I1 = 0.5 mA. Also Ix = 0.5I1 = 0.25 mA and Iy = 0.5(I − I1) = 0.25 mA. Now, suppose that the input changes the sharing of current I, so that I1 = 0.2 mA, and I − I1 = 0.8 mA, then, Iy = 0.4 mA and Ix = 0.1 mA.

In either case, the sum (Ix + Iy) remains constant, this is true for all input signals and attenuation ratios. Therefore a constant current source (controlled by the amplitude setting) can be used to supply the current (Iy + Ix).

If Iv = I, then Iout = $\overline{\text{Iout}}$ = 0

Of Iv = 0, then Iout = $\overline{\text{Iout}}$ = 0.5 x I

Vernier Control Currents

A variable reference voltage corresponding to the output amplitude is generated from a DAC. This is then converted by Q408 into a current which generates a secondary reference voltage across (R441 + R497). This voltage controls the current sources Q409, Q410 and Q411.

Digital signals HV1OFF, HV2OFF and HV3OFF, from the latch U160, control the MUX U405. This enables a fixed voltage across (RV401 + R488), that can be switched to the reference inputs of the current sources, depending on which one of the verniers in the linear amplifier is switched off.

Output Control

Table 6-5-1. U2 Signal Definitions

Signal	Description
HRELG	High RELay to Ground; switches the back termination to ground instead of to VOFS
HTHRU	High THRU (normal output); bypasses post attenuator on the OUT terminal
HPATT*	High Post ATTenuator (inverted output); adds post attenuator on the $\overline{\text{OUT}}$ terminal
HCOMP	High COMPlement; activates complement mode
HENOUT	High ENable OUTput; enables the OUT terminal
$\overline{\text{HENOUT}}$	High ENable $\overline{\text{OUT}}$put; enables the $\overline{\text{OUT}}$ terminal

Note

Signals on inputs of U2: H > 0 V; L < −10 V.

Table 6-5-2. Amplitude Range Truth Table

Amplitude Range	HV1OFF	HV2OFF	HV3OFF	HTHRU	HPATT*	HRELG
1 : 5.00 to 2.16 V	L	L	L	H	L	L
2 : 2.15 to 0.72 V	H	L	L	H	L	L
3 : 0.71 to 0.30 V	H	H	L	H	L	L
4 : 0.29 to 0.10 V	H	L	L	L	H	H

Note

On range 4:

- The post attenuators of both OUT and $\overline{\text{OUT}}$ are activated
- The linear amplifier runs as in range 2
- The common node of the back terminations is switched to ground
- The output offset is controlled at the post attenuator.

Floating Output Amplifier

Due to power dissipation/thermal considerations and to avoid breakdown, the output amplifier's supply voltages are floated simultaneously with the output offset. Only half the 10V window needs to be floated.

The output levels are set by controlling high level (HIL) and amplitude (AMP). HIL is derived from the offset voltage VOFS, where for external 50 Ω.

$$HIL = 0.5 \times (VOFS - 1.5\ V)$$

The primary reference VSHLAMP for all floating voltages is taken from VOFS (see figure below).

Note

VSHLAMP is clamped for HIL </= 0 V; i.e. floating is only effective if HIL > 0 V.

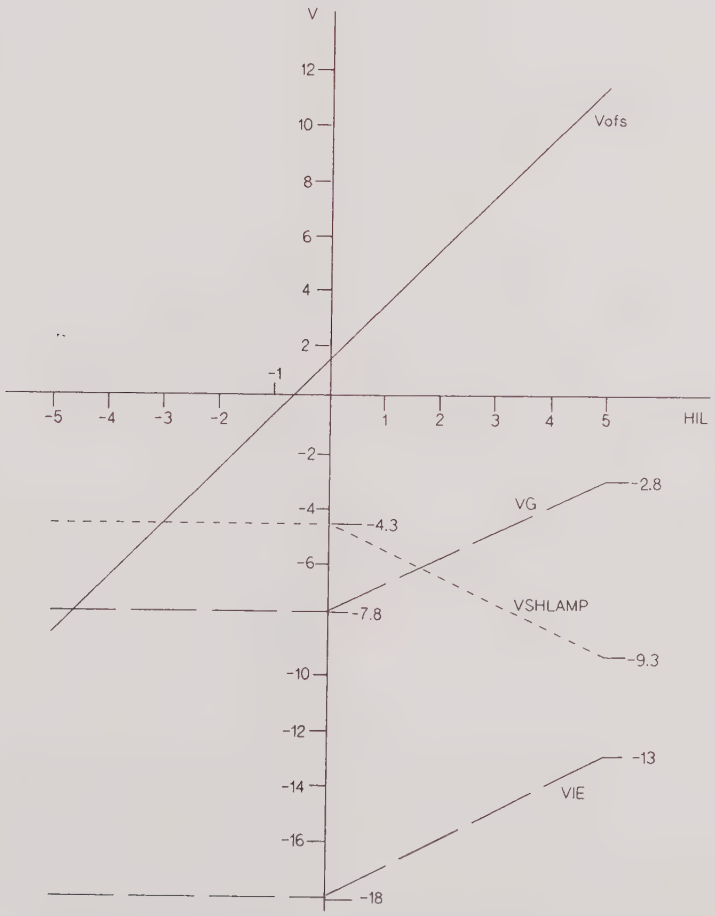

Figure 6-5-11. Floating Supplies

This page is intentionally blank

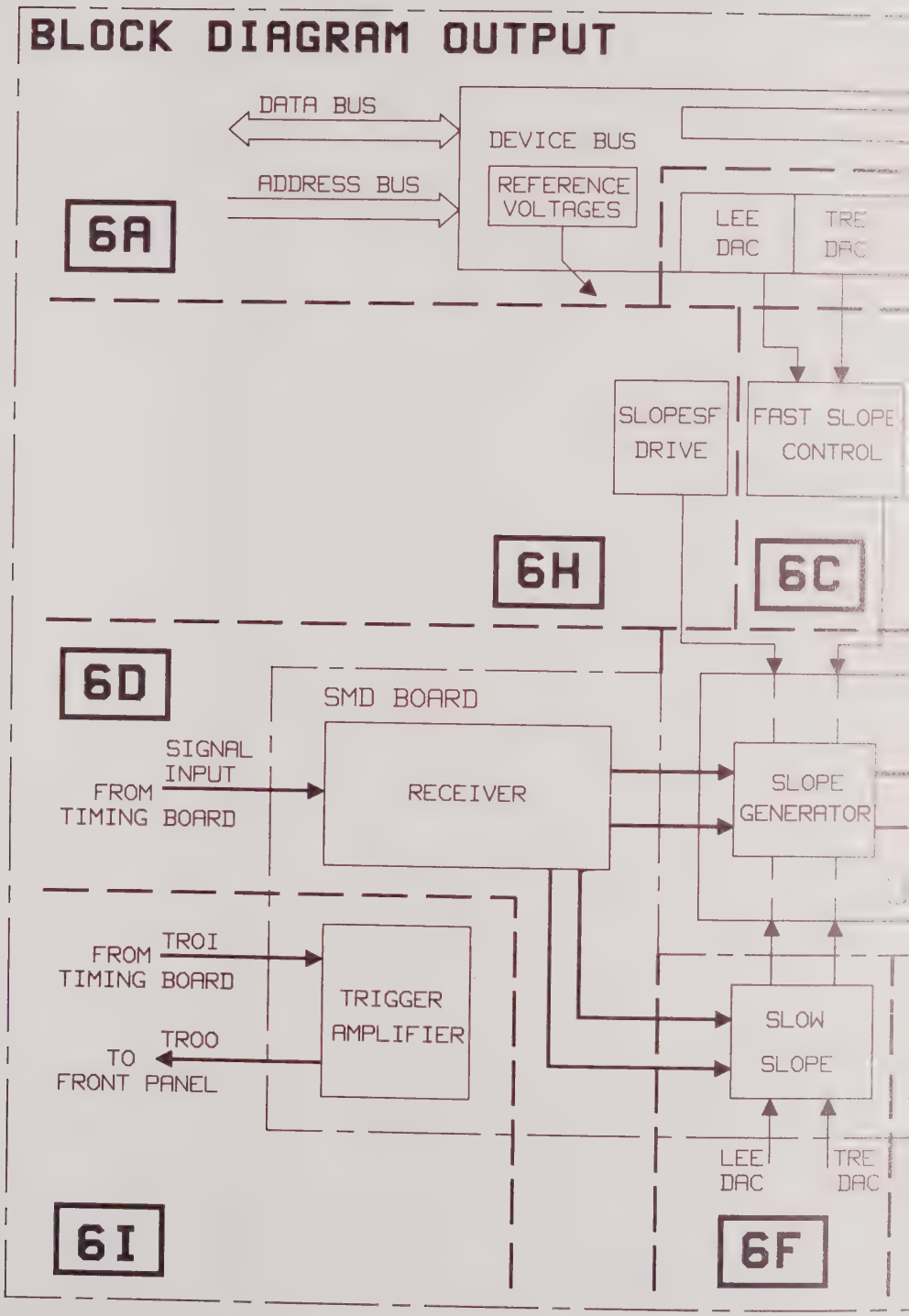
BLOCK DIAGRAM OUTPUT
DATA BUS
ADDRESS BUS
DEVICE BUS
REFERENCE VOLTAGES
LEE DAC
TRE DAC
6A
SLOPESF DRIVE
FAST SLOPE CONTROL
6H
6C
6D
SMD BOARD
SIGNAL INPUT
FROM TIMING BOARD
RECEIVER
SLOPE GENERATOR
FROM TIMING BOARD
TROI
TRIGGER AMPLIFIER
TROO
TO FRONT PANEL
SLOW SLOPE
LEE DAC
TRE DAC
6I
6F

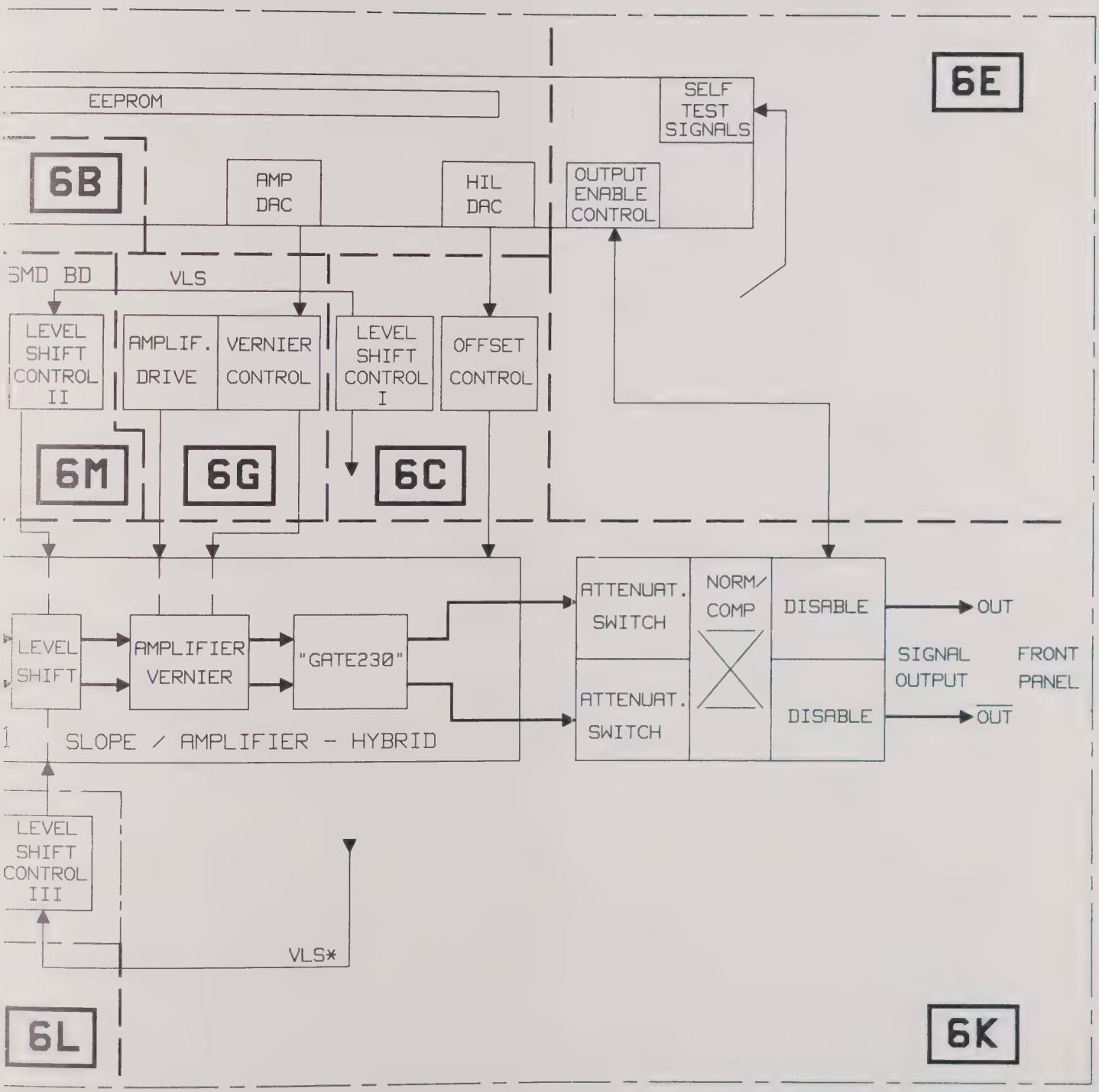

MODEL HP8130A FIGURE 6.5-12.
OUTPUT BOARD BLOCK DIAGRAM

A6 BD AY OUTPUT

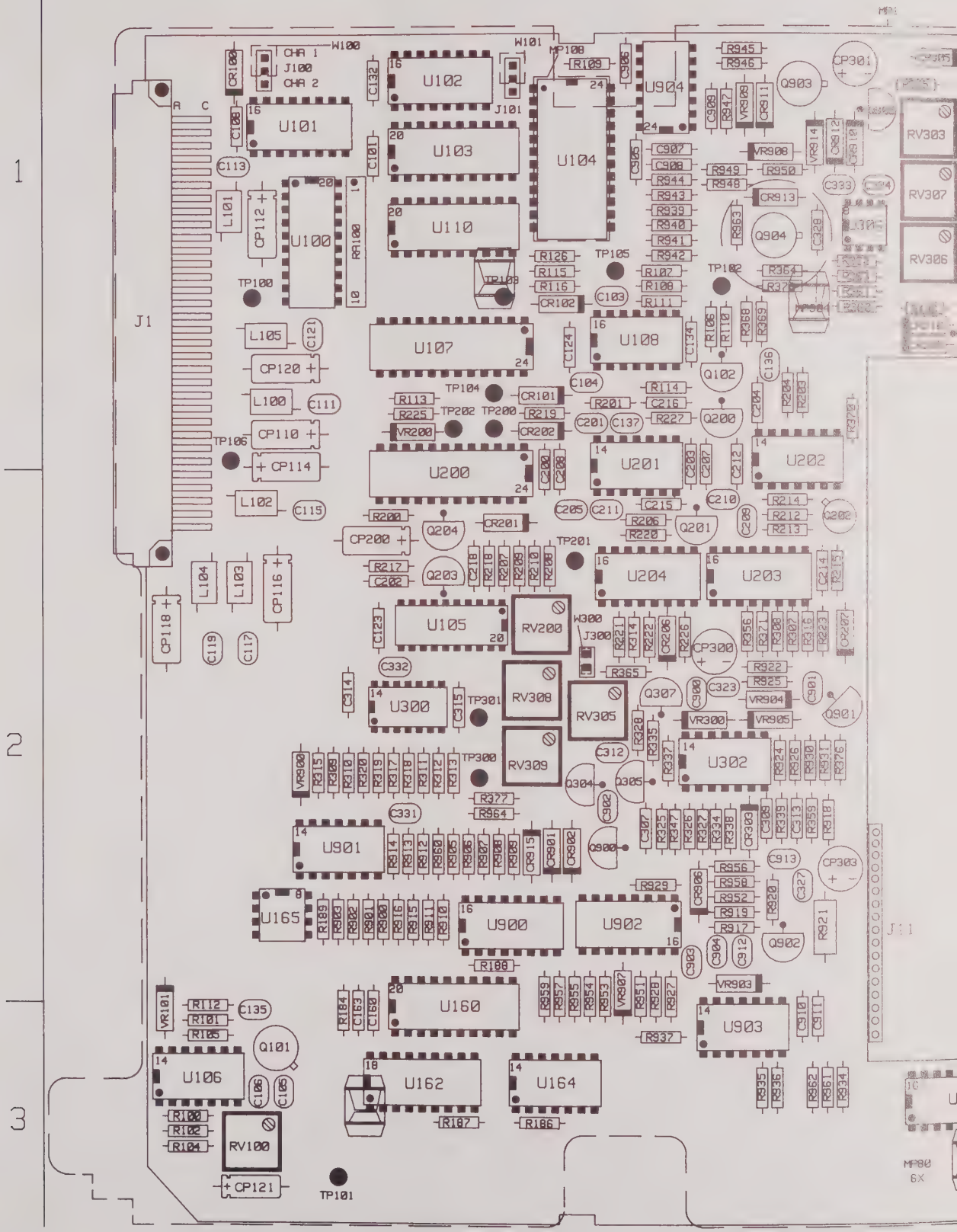

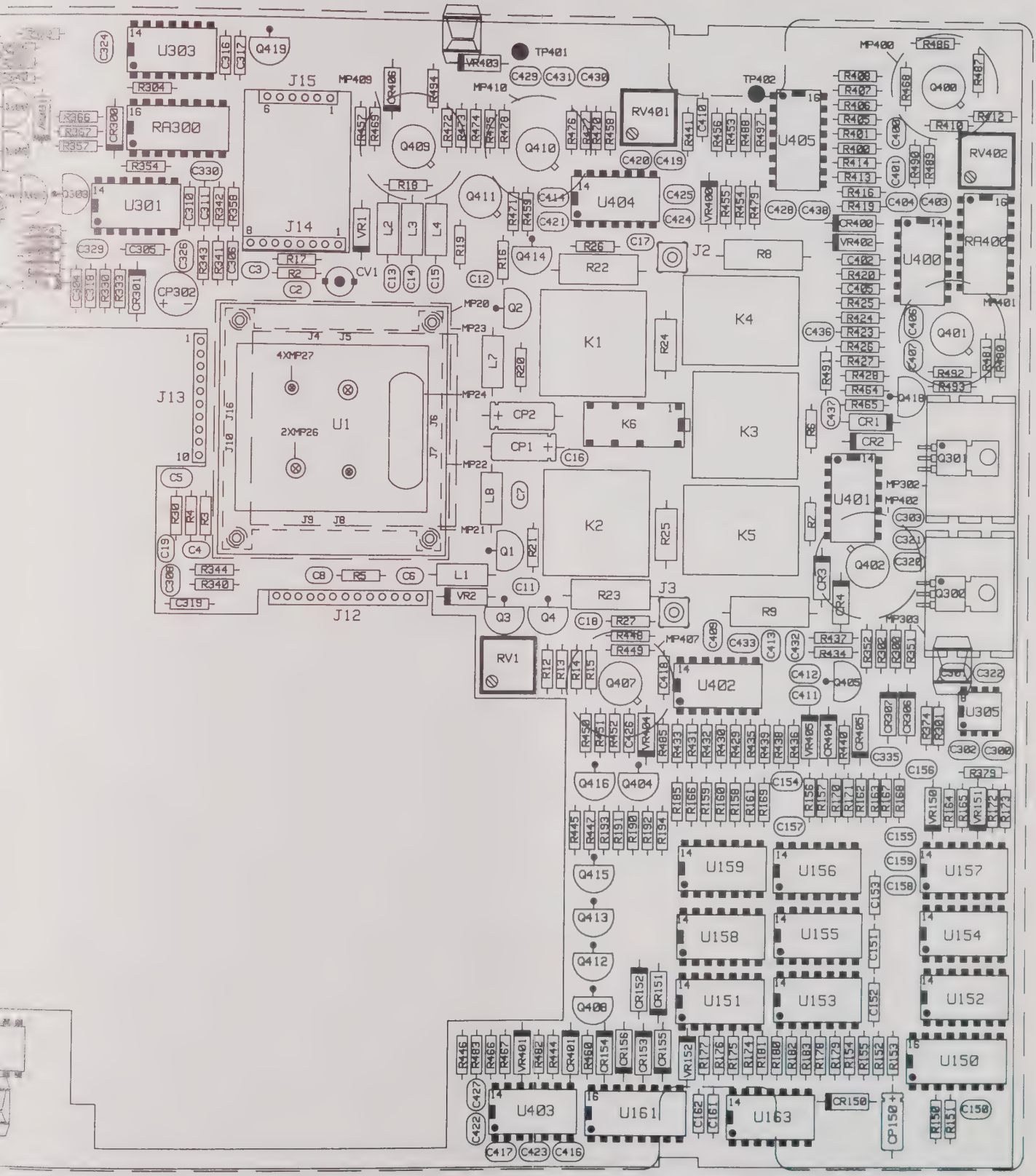

MODEL HP8130A FIGURE 6.5-13.
OUTPUT BD COMPONENT LAYOUT
OUTPUT BOARD (S26 OPT.020-A27) 6.5-21

REF. DES.	GRID LOC.
C2	C1
C3	C1
C4	C2
C5	C2
C6	C2
C7	C2
C8	C2
C11	C2
C12	C1
C13	C1
C14	C1
C15	C1
C16	C2
C17	C1
C18	C2
C19	B2
C101	A1
C103	B1
C104	B1
C105	A3
C106	A3
C108	A1
C111	A1
C113	A1
C115	A2
C117	A2
C119	A2
C121	A1
C123	A2
C124	A1
C132	A1
C134	B1
C135	A3
C136	B1
C137	B1
C150	D3
C151	D2
C152	D3
C153	D3
C154	D2
C155	D2
C156	D2
C157	D2
C158	D2
C159	D2
C160	A3
C161	D3
C162	D3
C163	A3
C200	A2
C201	B1
C202	A2
C203	B1
C204	B1

REF. DES.	GRID LOC.
C205	A2
C207	B1
C208	A2
C209	B2
C210	B2
C211	B2
C212	B1
C214	B2
C215	B2
C216	B1
C218	A2
C300	D2
C301	D2
C302	D2
C303	D2
C304	B1
C305	B1
C306	C1
C307	B2
C308	B2
C309	B2
C310	C1
C311	C1
C312	B2
C313	B2
C314	A2
C315	A2
C316	C1
C317	C1
C318	B1
C319	C2
C320	D2
C321	D2
C322	D2
C323	B2
C324	B1
C326	C1
C327	B2
C328	B1
C329	B1
C330	C1
C331	A2
C332	A2
C333	B1
C334	B1
C400	D1
C401	D1
C402	D1
C403	D1
C404	D1
C405	D1
C406	D1
C407	D1

REF. DES.	GRID LOC.
C409	D2
C410	C1
C411	D2
C412	D2
C413	D2
C414	C1
C416	C3
C417	C3
C418	C2
C419	C1
C420	C1
C421	C1
C422	C3
C423	C3
C424	C1
C425	C1
C426	C2
C427	C3
C428	D1
C429	C1
C430	C1
C431	C1
C432	D2
C433	D2
C436	D1
C437	D1
C438	D1
C900	B2
C901	B2
C902	B2
C903	B2
C904	B2
C905	B1
C906	B1
C907	B1
C908	B1
C909	B1
C910	B3
C911	B3
C912	B2
C913	B2
CP1	C2
CP2	C1
CP110	A1
CP112	A1
CP114	A1
CP116	A2
CP118	A2
CP120	A1
CP121	A3
CP150	D3
CP200	A2

REF. DES.	GRID LOC.
CP300	B2
CP301	B1
CP302	B1
CP303	B2
CR1	D1
CR2	D1
CR3	D2
CR4	D2
CR100	A1
CR101	A1
CR102	A1
CR150	D3
CR151	C3
CR152	C3
CR153	C3
CR154	C3
CR155	C3
CR156	C3
CR201	A2
CR202	A1
CR206	B2
CR207	B2
CR209	B1
CR210	B1
CR300	B1
CR301	B1
CR303	B2
CR305	B1
CR306	D2
CR307	D2
CR400	D1
CR401	C3
CR404	D2
CR405	D2
CR406	C1
CR901	A2
CR902	A2
CR906	B2
CR910	B1
CR911	B1
CR912	B1
CR913	B1
CR915	A2
CV1	C1
J1	A1
J2	C1
J3	C2
J4	C1
J5	C1
J6	C1
J7	C2

REF. DES.	GRID LOC.
J8	C2
J9	C2
J10	C2
J11	C1
J100	A1
J101	A1
J300	A2
K1	C1
K2	C2
K3	D1
K4	D1
K5	D2
K6	C1
L1	C2
L2	C1
L3	C1
L4	C1
L7	C1
L8	C2
L100	A1
L101	A1
L102	A2
L103	A2
L104	A2
L105	A1
MP1	B1
MP20	C1
MP21	C1
MP22	C1
MP23	C2
MP24	C2
MP25	C1
MP26	C2
MP27	C1
MP302	D1/2
MP303	D2
MP400	D1
MP401	D1
MP402	D2
MP407	C2
MP409	C1
MP410	C1
MP904	B1
Q1	C2
Q2	C1
Q3	C2
Q4	C2
Q101	A3
Q102	B1
Q200	B1
Q201	B2
Q202	B2

REF. DES.	GRID LOC.
Q203	A2
Q204	A2
Q300	D2
Q301	D2
Q302	B1
Q303	B1
Q304	A2
Q305	B2
Q307	B2
Q308	B1
Q309	B1
Q400	D1
Q401	D1
Q402	D2
Q404	C2
Q405	D2
Q407	C2
Q408	C3
Q409	C1
Q410	C1
Q411	C1
Q412	C3
Q413	C2
Q414	C1
Q415	C2
Q416	C2
Q418	D1
Q419	C1
Q421	B1
Q900	B2
Q901	B2
Q902	B2
Q903	B1
Q904	B1
Q905	B1
R2	C1
R3	C2
R4	C2
R5	C2
R6	D1
R7	D2
R8	D1
R9	D2
R12	C2
R13	C2
R14	C2
R15	C2
R16	C1
R17	C1
R18	C1
R19	C1
R20	C1
R21	C2
R22	C1
R23	C2

REF. DES.
R26
R27
R30
R100
R101
R102
R104
R105
R106
R107
R108
R109
R110
R111
R112
R113
R114
R115
R116
R126
R150
R151
R152
R153
R154
R155
R156
R157
R158
R159
R160
R161
R162
R163
R164
R165
R166
R167
R168
R169
R170
R171
R172
R173
R174
R175
R176
R177
R178
R179
R180
R181
R182

GRID LOC.	REF. DES.	GRID LOC.	REF. DES.	GRID LOC.	REF. DES.	GRID LOC.	REF. DES.	GRID LOC.	REF. DES.	GRID LOC.	REF. DES.	GRID LOC.	REF. DES.	GRID LOC.
1	R183	D3	R321	B1	R405	D1	R470	C1	R930	B2	TP105	B1	U405	D1
2	R184	A3	R322	B1	R406	D1	R471	C1	R931	B2	TP106	A1	U900	A2
2	R185	C2	R323	B1	R407	D1	R472	C1	R934	B3	TP200	A1	U901	A2
3	R186	A3	R324	B1	R408	D1	R473	C1	R935	B3	TP201	A2	U902	B2
3	R187	A3	R325	B2	R410	D1	R474	C1	R936	B3	TP202	A1	U903	B3
3	R188	A2	R326	B2	R412	D1	R475	C1	R937	B3	TP300	A2	U904	B1
3	R189	A2	R327	B2	R413	D1	R476	C1	R939	B1	TP301	A2		
3	R190	C2	R328	B2	R414	D1	R477	C1	R940	B1	TP401	C1	VR1	C1
1	R191	C2	R329	B1	R416	D1	R478	C1	R941	B1	TP402	D1	VR2	C2
1	R192	C2	R330	B1	R419	D1	R479	D1	R942	B1			VR3	B1
1	R193	C2	R332	B1	R420	D1	R480	D1	R943	B1	U1	C1	VR101	A3
1	R194	C2	R333	B1	R423	D1	R481	D1	R944	B1	U2	B3	VR150	D2
1	R200	A2	R334	B2	R424	D1	R482	C3	R945	B1	U100	A1	VR151	D2
1	R201	B1	R335	B2	R425	D1	R483	C3	R946	B1	U101	A1	VR152	C3
3	R203	B1	R337	B2	R426	D1	R485	C2	R947	B1	U102	A1	VR200	A1
1	R204	B1	R338	B2	R427	D1	R486	D1	R948	B1	U103	A1	VR300	B2
1	R206	B2	R339	B2	R428	D1	R487	D1	R949	B1	U104	A1	VR301	B1
1	R207	A2	R340	C2	R429	D2	R488	D1	R950	B1	U105	A2	VR400	D1
1	R208	A2	R341	C1	R430	D2	R489	D1	R951	B2	U106	A3	VR401	C3
1	R209	A2	R342	C1	R431	D2	R490	D1	R952	B2	U107	A1	VR402	D1
3	R210	A2	R343	C1	R432	D2	R491	D1	R953	B2	U108	B1	VR403	C1
3	R212	B2	R344	C2	R433	C2	R492	D1	R954	A2	U110	A1	VR404	C2
3	R213	B2	R347	B2	R434	D2	R493	D1	R955	A2	U150	D3	VR405	D2
3	R214	B2	R348	B1	R435	D2	R494	C1	R956	B2	U151	D3	VR900	A2
3	R215	B2	R351	D2	R436	D2	R497	D1	R957	A2	U152	D3	VR903	B2
3	R217	A2	R352	D2	R437	D2	R498	B1	R958	B2	U153	D3	VR904	B2
2	R218	A2	R354	B1	R438	D2	R900	A2	R959	A2	U154	D2	VR905	B2
2	R219	A1	R355	B1	R439	D2	R901	A2	R960	A2	U155	D2	VR907	B2
2	R220	B2	R356	B2	R440	D2	R902	A2	R961	B3	U156	D2	VR908	B1
2	R221	B2	R357	B1	R441	C1	R903	A2	R962	B3	U157	D2	VR909	B1
2	R222	B2	R358	C1	R444	C3	R905	A2	R963	B1	U158	D2	VR914	B1
2	R223	B2	R359	B2	R445	C2	R906	A2	R964	A2	U159	D2		
2	R225	A1	R360	B1	R446	C3	R907	A2			U160	A2	W100	A1
2	R226	B2	R361	B1	R447	C2	R908	A2	RA100	A1	U161	C3	W101	A1
2	R227	B1	R362	B1	R448	C2	R909	A2	RA300	B1	U162	A3	W300	A2
2	R300	D2	R363	B1	R449	C2	R910	A2	RA400	D1	U163	D3		
2	R301	D2	R364	B1	R450	C2	R911	A2	RV1	C2	U164	A3		
2	R302	D2	R365	B2	R451	C2	R912	A2	RV100	A3	U165	A2		
2	R304	B1	R366	B1	R452	C2	R913	A2	RV200	A2	U200	A2		
2	R307	B2	R367	B1	R453	D1	R914	A2	RV303	B1	U201	B1		
2	R308	B2	R368	B1	R454	D1	R915	A2	RV305	B2	U202	B1		
2	R309	A2	R369	B1	R455	D1	R916	A2	RV306	B1	U203	B2		
2	R310	A2	R370	B1	R456	D1	R917	B2	RV307	B1	U204	B2		
2	R311	A2	R371	B2	R457	C1	R918	B2	RV308	A2	U300	A2		
2	R312	A2	R372	B1	R458	C1	R919	B2	RV309	A2	U301	B1		
2	R313	A2	R373	B1	R459	C1	R920	B2	RV401	C1	U302	B2		
2	R314	B2	R374	D2	R460	C3	R921	B2	RV402	D1	U303	B1		
2	R315	A2	R376	B2	R464	D1	R922	B2			U305	D2		
2	R316	B2	R377	A2	R465	D1	R924	B2	TP100	A1	U306	B1		
2	R317	A2	R378	B1	R466	C3	R925	B2	TP101	A3	U400	D1		
2	R318	A2	R379	D2	R467	C3	R926	B2	TP102	B1	U401	D2		
2	R319	A2	R400	D1	R468	D1	R927	B2	TP103	A1	U402	D2		
2	R320	A2	R401	D1	R469	C1	R928	B2	TP104	A1	U403	C3		
							R929	B2			U404	C1		

MODEL HP8130A
OUTPUT BD COMPONENT LOCATION CHART

FIGURE 6.5-14.

OUTPUT BD (A26 OPT.020-A27)

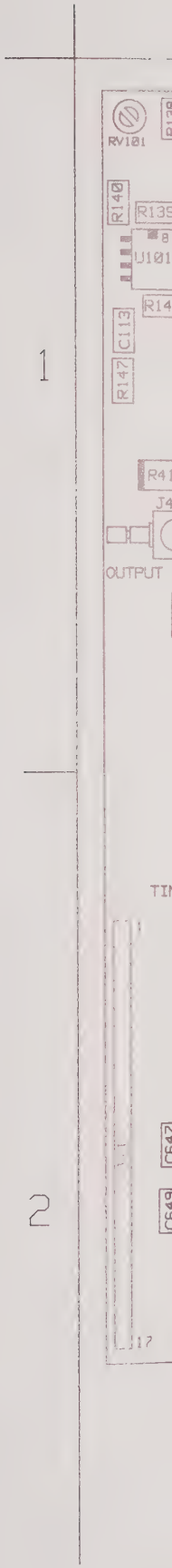
RV101
R140
U101
C113
R147
OUTPUT
1
2

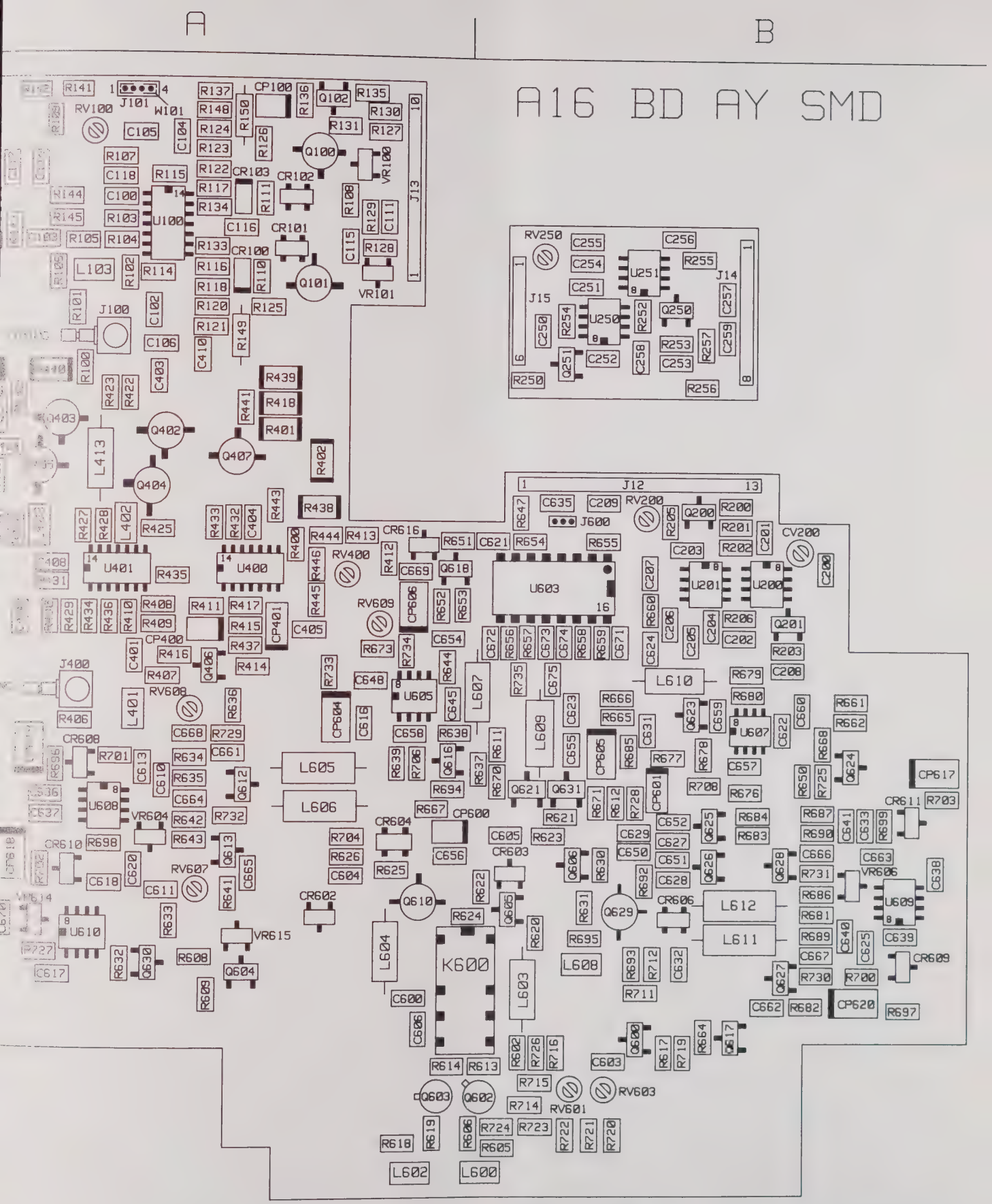

MODEL HP8130A
CHANNEL 1 SMD BOARD COMPONENT LAYOUT
OUTPUT BD (A26 OPT.020-A27)

FIGURE 6.5-15.

REF. DES.
C100
C102
C103
C104
C105
C106
C107
C108
C109
C110
C111
C112
C113
C114
C115
C116
C117
C118
C200
C201
C202
C203
C204
C205
C206
C207
C208
C209
C250
C251
C252
C253
C254
C255
C256
C257
C258
C259
C400
C401
C403
C404
C405
C408
C409
C410
C411
C600
C603
C604
C605
C606
C610
C611
C613
C616
C617
C618
C620

REF. DES.	GRID LOC.
C621	B1
C622	B2
C623	B2
C624	B2
C625	B2
C627	B2
C628	B2
C629	B2
C631	B2
C632	B2
C633	B2
C635	B1
C636	A2
C637	A2
C638	B2
C639	B2
C640	B2
C641	B2
C645	A2
C647	A2
C648	A2
C649	A2
C650	B2
C651	B2
C652	B2
C654	A2
C655	B2
C656	A2
C657	B2
C658	A2
C659	B2
C660	B2
C661	A2
C662	B2
C663	B2
C664	A2
C665	A2
C666	B2
C667	B2
C668	A2
C669	A1
C670	A2
C671	B2
C672	B2
C673	B2
C700	A2
CP100	A1
CP400	A2
CP401	A2
CP600	A2
CP601	B2
CP604	A2
CP605	B2
CP606	A2
CP617	B2
CP618	A2
CP619	A2
CP620	B2
CR100	A1
CR101	A1
CR102	A1
CR103	A1
CR602	A2
CR603	B2
CR604	A2
CR606	B2
CR608	A2
CR609	B2
CR610	A2
CR611	B2
CR616	A1
CV200	B1
J11	A2
J12	B1
J13	A1
J14	B1
J15	B1
J100	A1
J101	A1
J400	A2
J401	A1
J600	B1
K600	B2
L103	A1
L401	A2
L402	A1
L403	A1
L413	A1
L600	B2
L602	A2
L603	B2
L604	A2
L605	A2
L606	A2
L607	B2
L608	B2
L609	B2
L610	B2
L611	B2
L612	B2
Q100	A1
Q101	A1
Q102	A1
Q200	B1
Q201	B2
Q250	B1
Q251	B1
Q402	A1
Q403	A1
Q404	A1
Q405	A1
Q406	A2
Q407	A1
Q600	B2
Q602	B2
Q603	A2
Q604	A2
Q605	B2
Q606	B2
Q610	A2
Q612	A2
Q613	A2
Q616	A2
Q617	B2
Q618	A1
Q621	B2
Q623	B2
Q624	B2
Q625	B2
Q626	B2
Q627	B2
Q628	B2
Q629	B2
Q630	A2
Q631	B2
R100	A1
R101	A1
R102	A1
R103	A1
R104	A1
R105	A1
R106	A1
R107	A1
R108	A1
R109	A1
R110	A1
R111	A1
R114	A1
R115	A1
R116	A1
R117	A1
R118	A1
R120	A1
R121	A1
R122	A1
R123	A1
R124	A1
R125	A1
R126	A1
R127	A1
R128	A1
R129	A1
R130	A1
R131	A1
R133	A1
R134	A1
R135	A1
R136	A1
R137	A1
R138	A1
R139	A1
R140	A1
R141	A1
R142	A1
R143	A1
R144	A1
R145	A1
R146	A1
R147	A1
R148	A1
R149	A1
R150	A1
R200	B1
R201	B1
R202	B1
R203	B2
R205	B1
R206	B2
R250	B1
R252	B1
R253	B1
R254	B1
R255	B1
R256	B1
R257	B1
R400	A1
R401	A1
R402	A1
R406	A2
R407	A2
R408	A2
R409	A2
R410	A2
R411	A2
R412	A1
R413	A1
R414	A2
R415	A2
R416	A2
R417	A2
R418	A1
R419	A1
R422	A1
R423	A1
R424	A1
R425	A1
R426	A1
R427	A1
R428	A1
R429	A2
R430	A2
R431	A1
R432	A1
R433	A1
R434	A2
R435	A1
R436	A2
R437	A2
R438	A1
R439	A1
R440	A1
R441	A1
R442	A1
R443	A1
R444	A1
R445	A2
R446	A1
R602	B2
R605	B2
R606	A2
R608	A2
R609	A2
R611	B2
R612	B2
R613	B2
R614	A2
R617	B2
R618	A2
R619	A2
R620	B2
R621	B2
R622	B2
R623	B2
R624	A2
R625	A2
R626	A2
R630	B2
R631	B2
R632	A2
R633	A2
R634	A2
R635	A2
R636	A2
R637	B2
R638	A2
R639	A2
R641	A2
R642	A2
R643	A2
R644	A2
R647	B1
R650	B2
R651	A1
R652	A2
R653	A2
R654	B1
R655	B1
R656	B2
R657	B2
R658	B2
R659	B2
R660	B2
R661	B2
R662	B2
R664	B2
R665	B2
R666	B2
R667	A2
R668	B2
R670	B2
R671	B2
R673	A2
R676	B2
R677	B2
R678	B2
R679	B2
R680	B2
R681	B2
R682	B2
R683	B2
R684	B2
R685	B2
R686	B2
R687	B2
R689	B2
R690	B2
R692	B2
R693	B2
R694	A2
R695	B2
R696	A2
R697	B2
R698	A2
R699	B2
R700	B2
R701	A2
R702	A2
R703	B2
R704	A2
R706	A2
R708	B2
R711	B2
R712	B2
R714	B2
R715	B2
R716	B2
R719	B2
R720	B2
R721	B2
R722	B2
R723	B2
R724	B2
R725	B2
R726	B2
R727	A2
R728	B2
R729	A2
R730	B2
R731	B2
R732	A2
R733	A2
R734	A2
R735	B2
RV100	A1
RV101	A1
RV200	B1
RV250	B1
RV400	A1
RV601	B2
RV603	B2
RV607	A2
RV608	A2
RV609	A2
U100	A1
U101	A1
U200	B2
U201	B2
U250	B1
U251	B1
U400	A1
U401	A1
U603	B1
U605	A2
U607	B2
U608	A2
U609	B2
U610	A2
VR100	A1
VR101	A1
VR604	A2
VR606	B2
VR614	A2
VR615	A2
W101	A1

MODEL HP8130A FIGURE 6.5-16.

CHANNEL 1 SMD BD COMPONENT LOCATION CHART

OUTPUT BD (A26 OPT.020-A27)

RV101
R140
U101
R147
C113
J11
1
17
C647
C649

MODEL HP8130A
CHANNEL 2 SMD BOARD COMPONENT LAYOUT
OUTPUT BD (A26 OPT.020-A27)

FIGURE 6.5-17.

REF. DES.	GRID LOC.	REF. DES.	GRID LOC.	REF. DES.	GRID LOC.	REF. DES.	GRID LOC.	REF. DES.	GRID LOC.	REF. DES.	GRID LOC.	REF. DES.	GRID LOC.
[illegible]	A1	C635	B1	CR610	A2	R100	A1	R254	B1	R670	B2	RV100	A1
[illegible]	A1	C636	A2	CR611	B2	R101	A1	R255	B1	R671	B2	RV101	A1
[illegible]	A1	C637	A2	CR616	A1	R102	A1	R256	B1	R673	A2	RV200	B1
[illegible]	A1	C638	B2	CV200	B1	R103	A1	R257	B1	R676	B2	RV250	B1
[illegible]	A1	C639	B2	J11	A2	R104	A1	R602	B2	R677	B2	RV601	B2
[illegible]	A1	C640	B2	J12	B1	R105	A1	R605	B2	R678	B2	RV603	B2
[illegible]	A1	C641	B2	J13	A1	R106	A1	R606	A2	R679	B2	RV607	A2
[illegible]	A1	C645	A2	J14	B1	R107	A1	R608	A2	R680	B2	RV608	A2
[illegible]	A1	C647	A2	J15	B1	R108	A1	R609	A2	R681	B2	RV609	A2
[illegible]	A1	C648	A2	J100	A1	R109	A1	R611	B2	R682	B2	U100	A1
[illegible]	A1	C649	A2	J101	A1	R110	A1	R612	B2	R683	B2	U101	A1
[illegible]	A1	C650	B2	J600	B1	R111	A1	R613	B2	R684	B2	U200	B2
[illegible]	A1	C651	B2	K600	B2	R114	A1	R614	A2	R685	B2	U201	B2
[illegible]	B1	C652	B2	L103	A1	R115	A1	R617	B2	R686	B2	U250	B1
[illegible]	B1	C654	A2	L600	B2	R116	A1	R618	A2	R687	B2	U251	B1
[illegible]	B2	C655	B2	L602	A2	R117	A1	R619	A2	R689	B2	U603	B1
[illegible]	B1	C656	A2	L603	B2	R118	A1	R620	B2	R690	B2	U605	A2
[illegible]	B2	C657	B2	L604	A2	R120	A1	R621	B2	R692	B2	U607	B2
[illegible]	B2	C658	A2	L605	A2	R121	A1	R622	B2	R693	B2	U608	A2
[illegible]	B2	C659	B2	L606	A2	R122	A1	R623	B2	R694	A2	U609	B2
[illegible]	B1	C660	B2	L607	B2	R123	A1	R624	A2	R695	B2	U610	A2
[illegible]	B2	C661	A2	L608	B2	R124	A1	R625	A2	R696	A2	VR100	A1
[illegible]	B1	C662	B2	L609	B2	R125	A1	R626	A2	R697	B2	VR101	A1
[illegible]	B1	C663	B2	L610	B2	R126	A1	R630	B2	R698	A2	VR604	A2
[illegible]	B1	C664	A2	L611	B2	R127	A1	R631	B2	R699	B2	VR606	B2
[illegible]	B1	C665	A2	L612	B2	R128	A1	R632	A2	R700	B2	VR614	A2
[illegible]	B1	C666	B2	Q100	A1	R129	A1	R633	A2	R701	A2	VR615	A2
[illegible]	B1	C667	B2	Q101	A1	R130	A1	R634	A2	R702	A2	W101	A1
[illegible]	B1	C668	A2	Q102	A1	R131	A1	R635	A2	R703	B2		
[illegible]	B1	C669	A1	Q200	B1	R133	A1	R636	A2	R704	A2		
[illegible]	B1	C670	A2	Q201	B2	R134	A1	R637	B2	R706	A2		
[illegible]	B1	C671	B2	Q250	B1	R135	A1	R638	A2	R708	B2		
[illegible]	B1	C672	B2	Q251	B1	R136	A1	R639	A2	R711	B2		
[illegible]	A2	C673	B2	Q600	B2	R137	A1	R641	A2	R712	B2		
[illegible]	B2	C674	B2	Q602	B2	R138	A1	R642	A2	R714	B2		
[illegible]	A2	C675	B2	Q603	A2	R139	A1	R643	A2	R715	B2		
[illegible]	B2	C700	A2	Q604	A2	R140	A1	R644	A2	R716	B2		
[illegible]	A2	CP100	A1	Q605	B2	R141	A1	R647	B1	R719	B2		
[illegible]	A2	CP600	A2	Q606	B2	R142	A1	R650	B2	R720	B2		
[illegible]	A2	CP601	B2	Q610	A2	R143	A1	R651	A1	R721	B2		
[illegible]	A2	CP604	A2	Q612	A2	R144	A1	R652	A2	R722	B2		
[illegible]	A2	CP605	B2	Q613	A2	R145	A1	R653	A2	R723	B2		
[illegible]	A2	CP606	A2	Q616	A2	R146	A1	R654	B1	R724	B2		
[illegible]	A2	CP617	B2	Q617	B2	R147	A1	R655	B1	R725	B2		
[illegible]	A2	CP618	A2	Q618	A1	R148	A1	R656	B2	R726	B2		
[illegible]	B1	CP619	A2	Q621	B2	R149	A1	R657	B2	R727	A2		
[illegible]	B2	CP620	B2	Q623	B2	R150	A1	R658	B2	R728	B2		
[illegible]	B2	CR100	A1	Q624	B2	R200	B1	R659	B2	R729	A2		
[illegible]	B2	CR101	A1	Q625	B2	R201	B1	R660	B2	R730	B2		
[illegible]	B2	CR102	A1	Q626	B2	R202	B1	R661	B2	R731	B2		
C627	B2	CR103	A1	Q627	B2	R203	B2	R662	B2	R732	A2		
C628	B2	CR602	A2	Q628	B2	R205	B1	R664	B2	R733	A2		
C629	B2	CR603	B2	Q629	B2	R206	B2	R665	B2	R734	A2		
C631	B2	CR604	A2	Q630	A2	R250	B1	R666	B2	R735	B2		
C632	B2	CR606	B2	Q631	B2	R252	B1	R667	A2				
C633	B2	CR608	A2			R253	B1	R668	B2				
		CR609	B2										

MODEL HP8130A FIGURE 6.5-18.

CHANNEL 2 SMD BD COMPONENT LOCATION CHART

OUTPUT BD (A26 OPT.020-A27)

P/O A6 OUTPUT BOARD

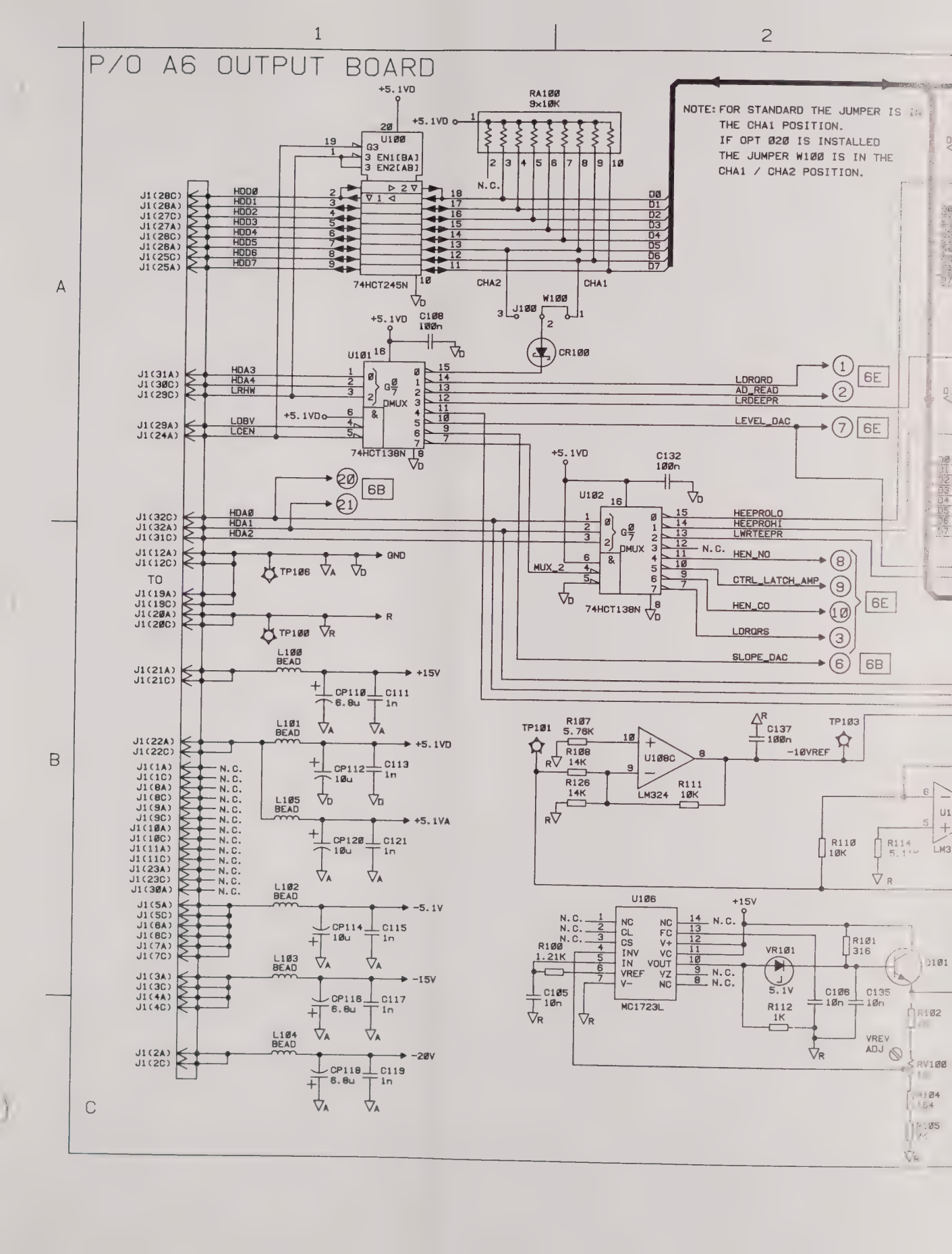

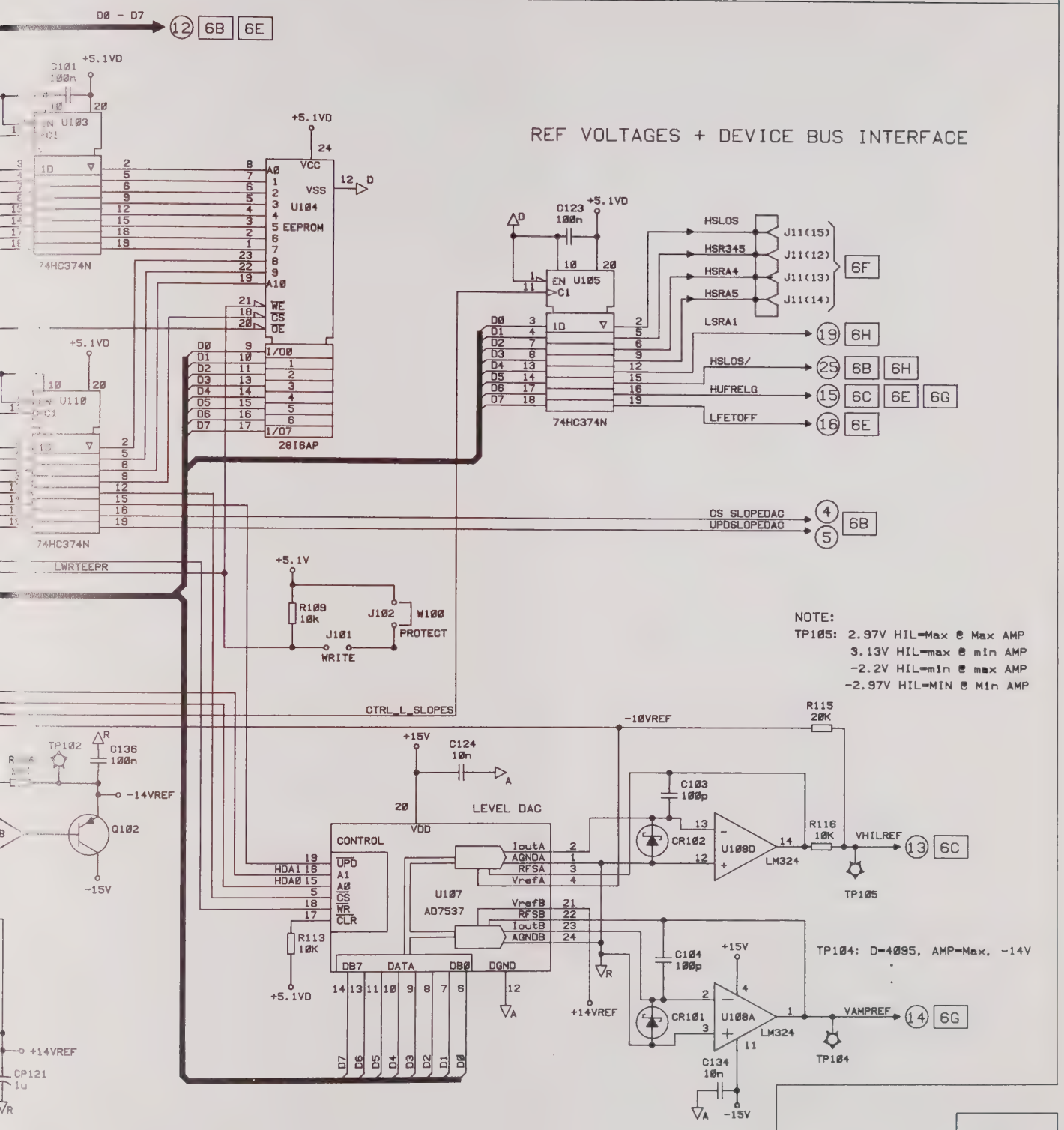

6A

MODEL HP8130A
FIGURE 6.5-19.
OUTPUT BOARD SCHEMATICS
(SHEET 1 OF 17)

P/O A6 OUTPUT BOARD

LEADING AND TRAILING REF. VOLTAGES

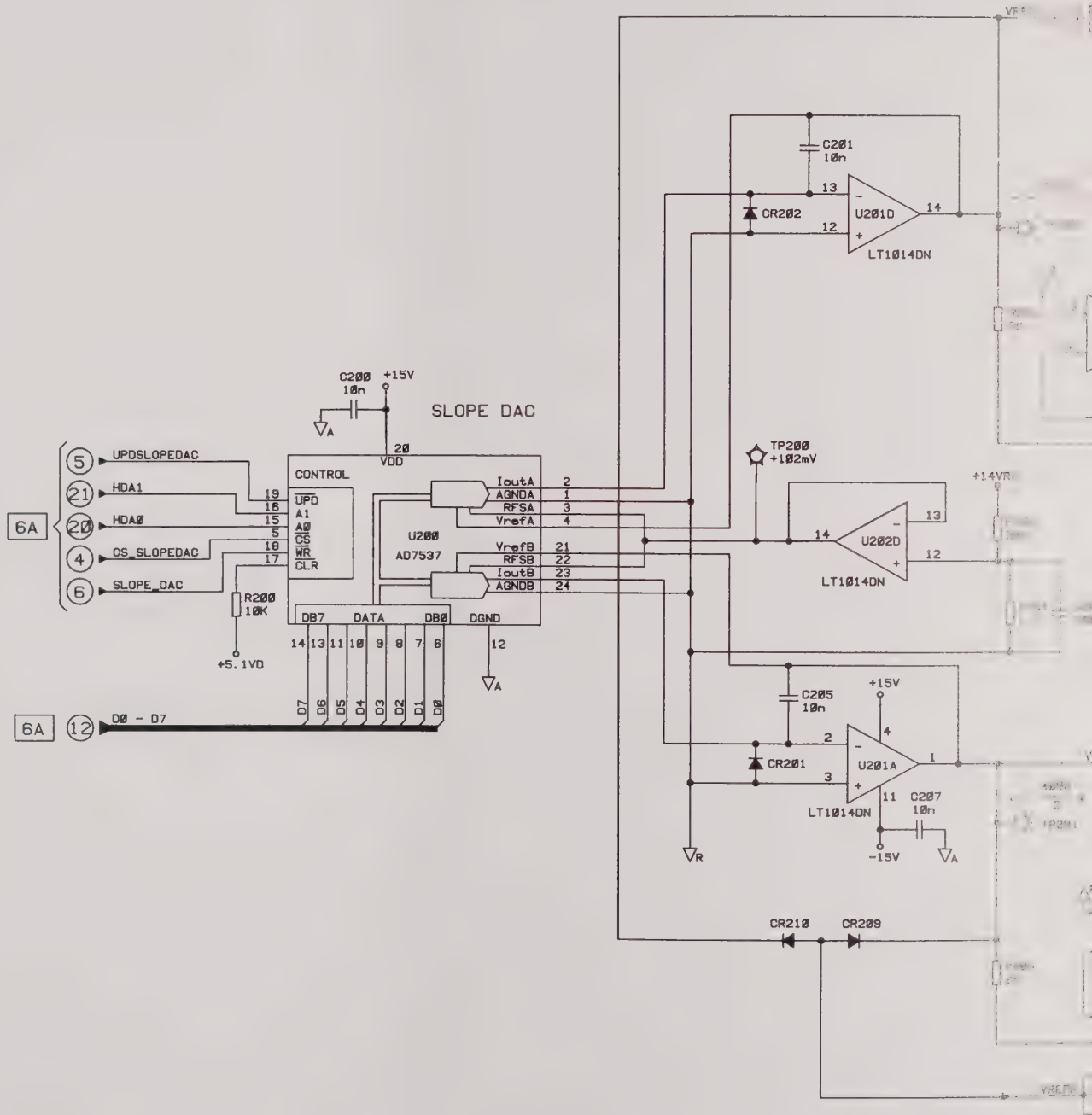

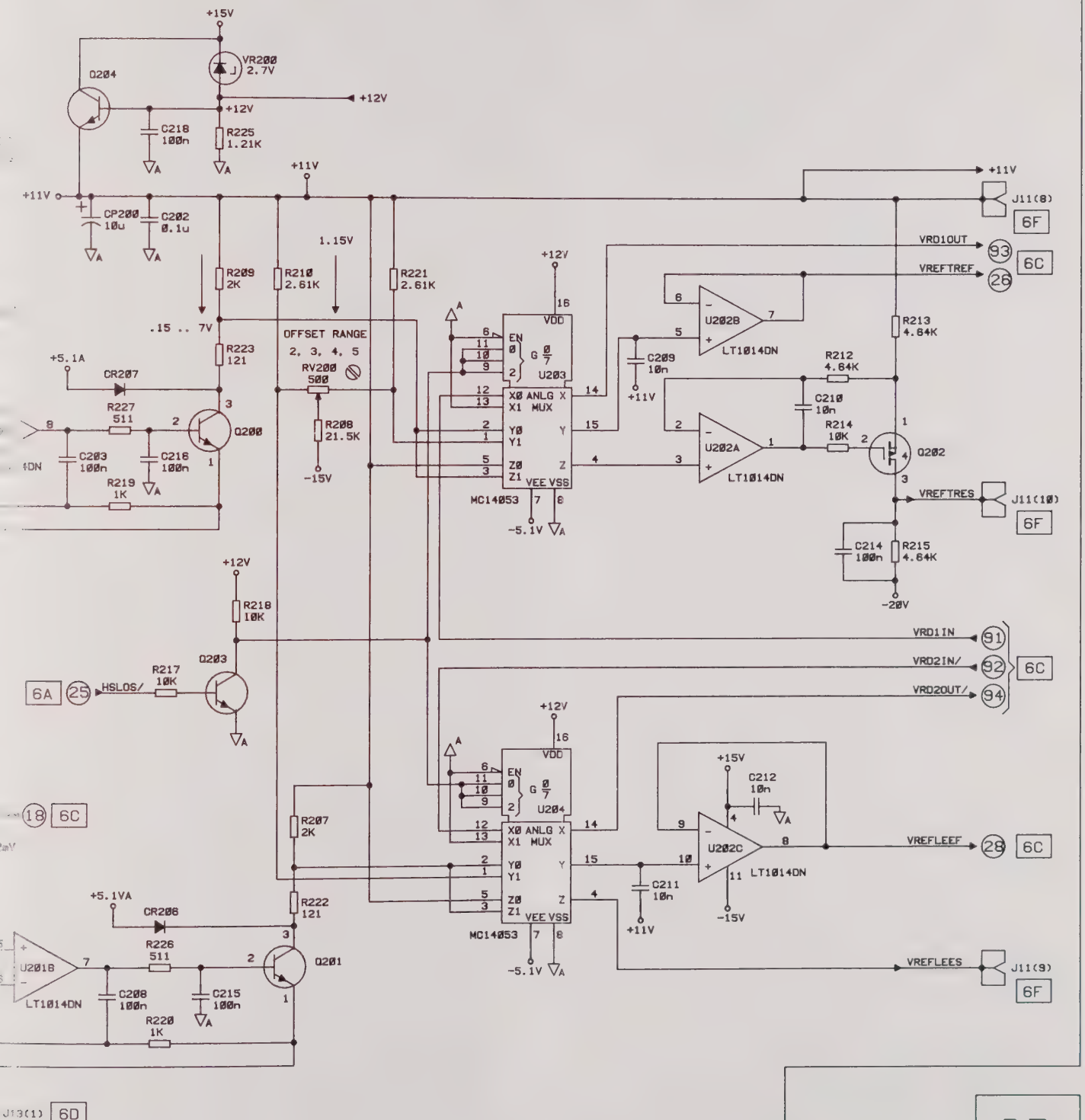

6B

MODEL HP8130A
FIGURE 6.5-20.
OUTPUT BOARD SCHEMATICS
(SHEET 2 OF 17)

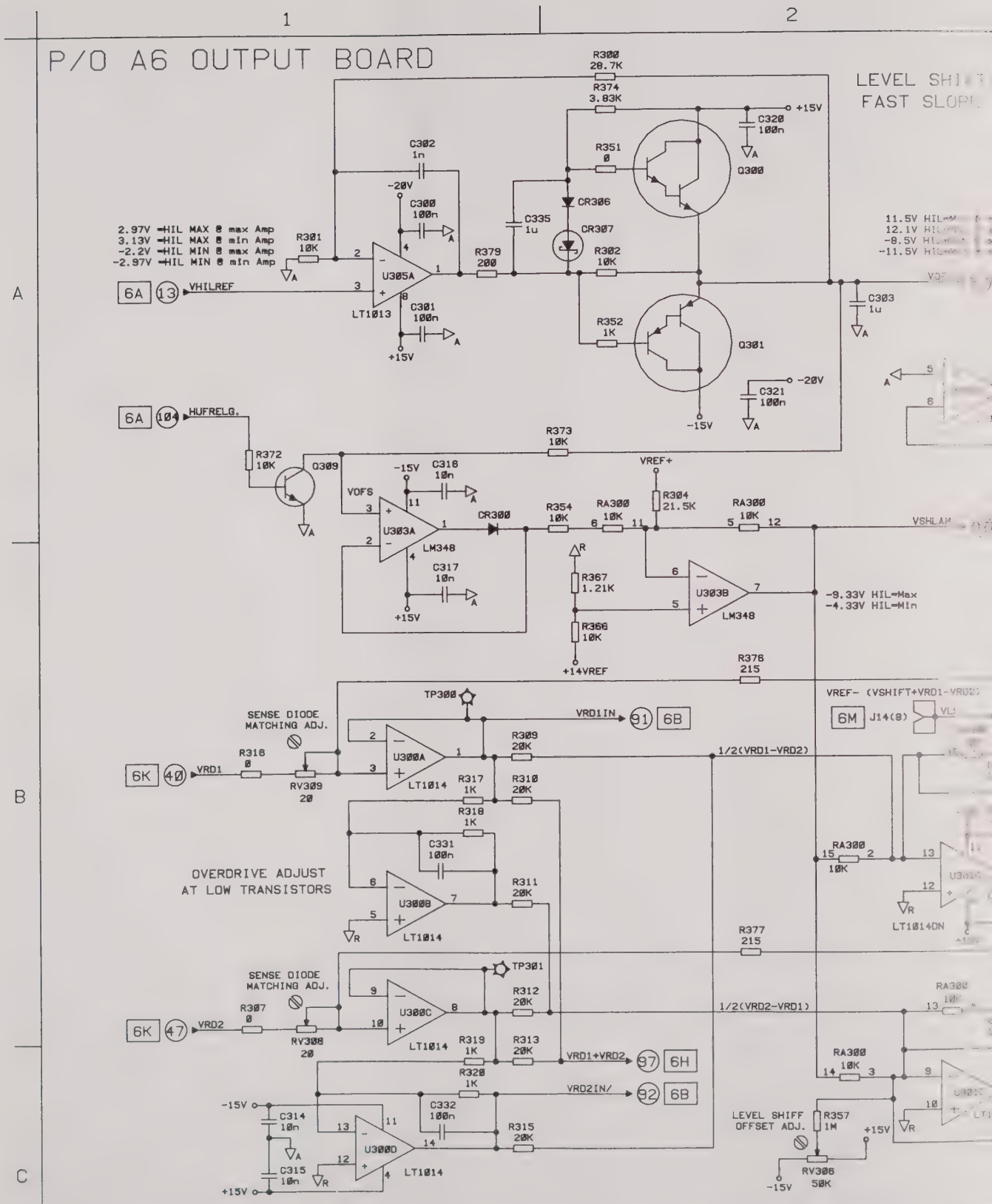
P/O A6 OUTPUT BOARD
1
2
A
B
C
R300 20.7K
R374 3.83K
+15V
C320 100n
C302 1n
R351 0
Q300
-20V
C300 100n
CR306
C335 1u
CR307
2.97V =HIL MAX @ max Amp
3.13V =HIL MAX @ min Amp
-2.2V =HIL MIN @ max Amp
-2.97V =HIL MIN @ min Amp
R301 10K
R379 200
R302 10K
U305A
LT1013
6A 13 VHILREF
C301 100n
+15V
R352 1K
Q301
C303 1u
C321 100n
-20V
-15V
6A 104 HUFRELG.
R372 10K
Q309
R373 10K
-15V
C316 10n
VOFS
U303A
LM348
CR300
C317 10n
+15V
R354 10K
RA300 10K
VREF+
R304 21.5K
RA300 10K
VSHLAM
R367 1.21K
R366 10K
+14VREF
U303B
LM348
-9.33V HIL=Max
-4.33V HIL=Min
R376 215
TP300
SENSE DIODE MATCHING ADJ.
VRD1IN
91 6B
VREF- (VSHIFT+VRD1-VRD2)
6M J14(8)
6K 40 VRD1
R316 0
RV309 20
U300A
LT1014
R309 20K
1/2(VRD1-VRD2)
R317 1K
R310 20K
R318 1K
C331 100n
OVERDRIVE ADJUST AT LOW TRANSISTORS
U300B
LT1014
R311 20K
RA300 10K
LT1014DN
R377 215
TP301
SENSE DIODE MATCHING ADJ.
6K 47 VRD2
R307 0
RV308 20
U300C
LT1014
R312 20K
1/2(VRD2-VRD1)
R319 1K
R313 20K
VRD1+VRD2
97 6H
R320 1K
VRD2IN/
92 6B
RA300 10K
-15V
C314 10n
C315 10n
+15V
C332 100n
U300D
LT1014
R315 20K
LEVEL SHIFF OFFSET ADJ.
R357 1M
RV306 50K
+15V
-15V

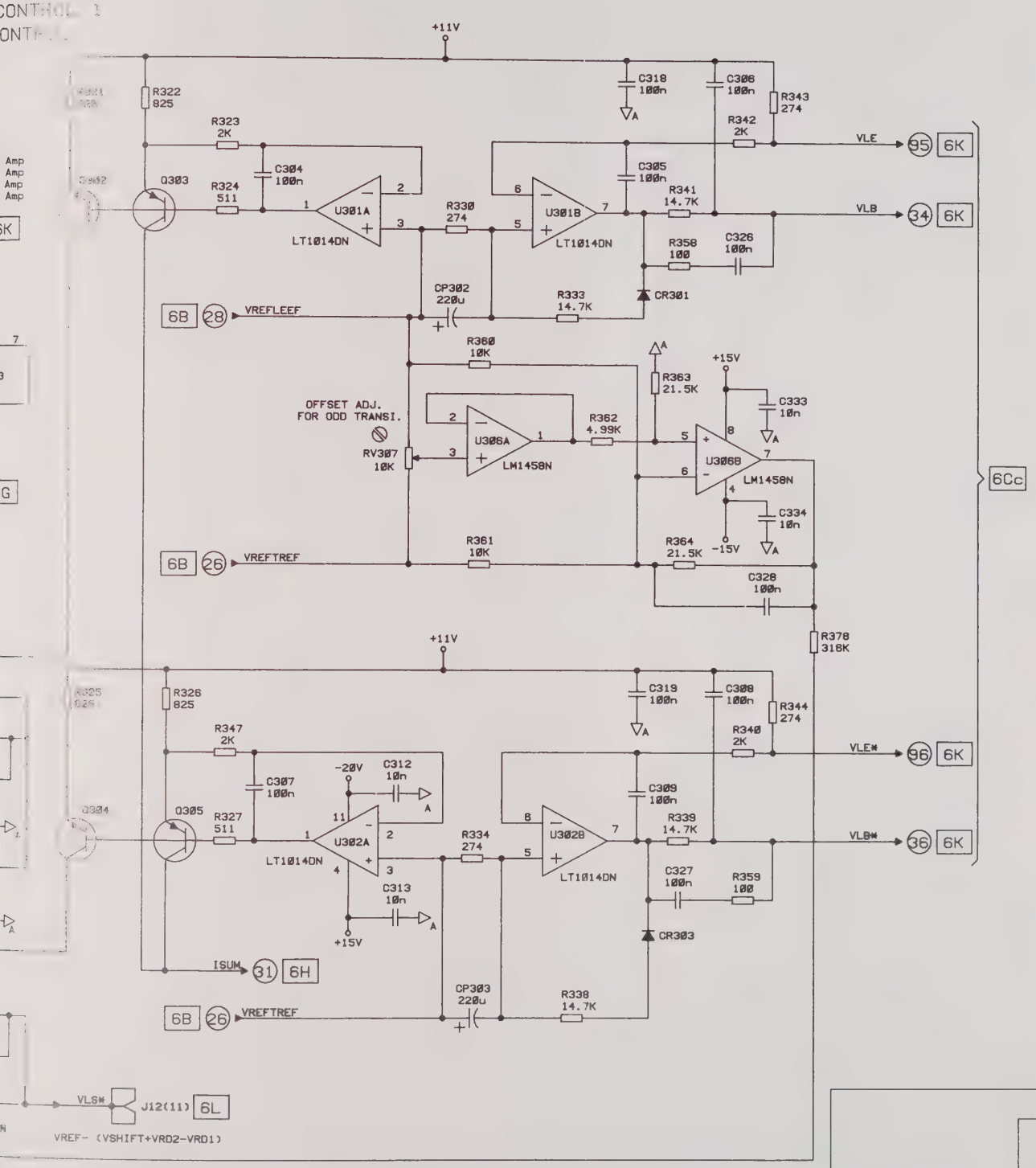

6C

MODEL HP8130A
FIGURE 6.5-21.
OUTPUT BOARD SCHEMATICS
(SHEET 1 OF 17)

P/O A6 OUTPUT BOARD

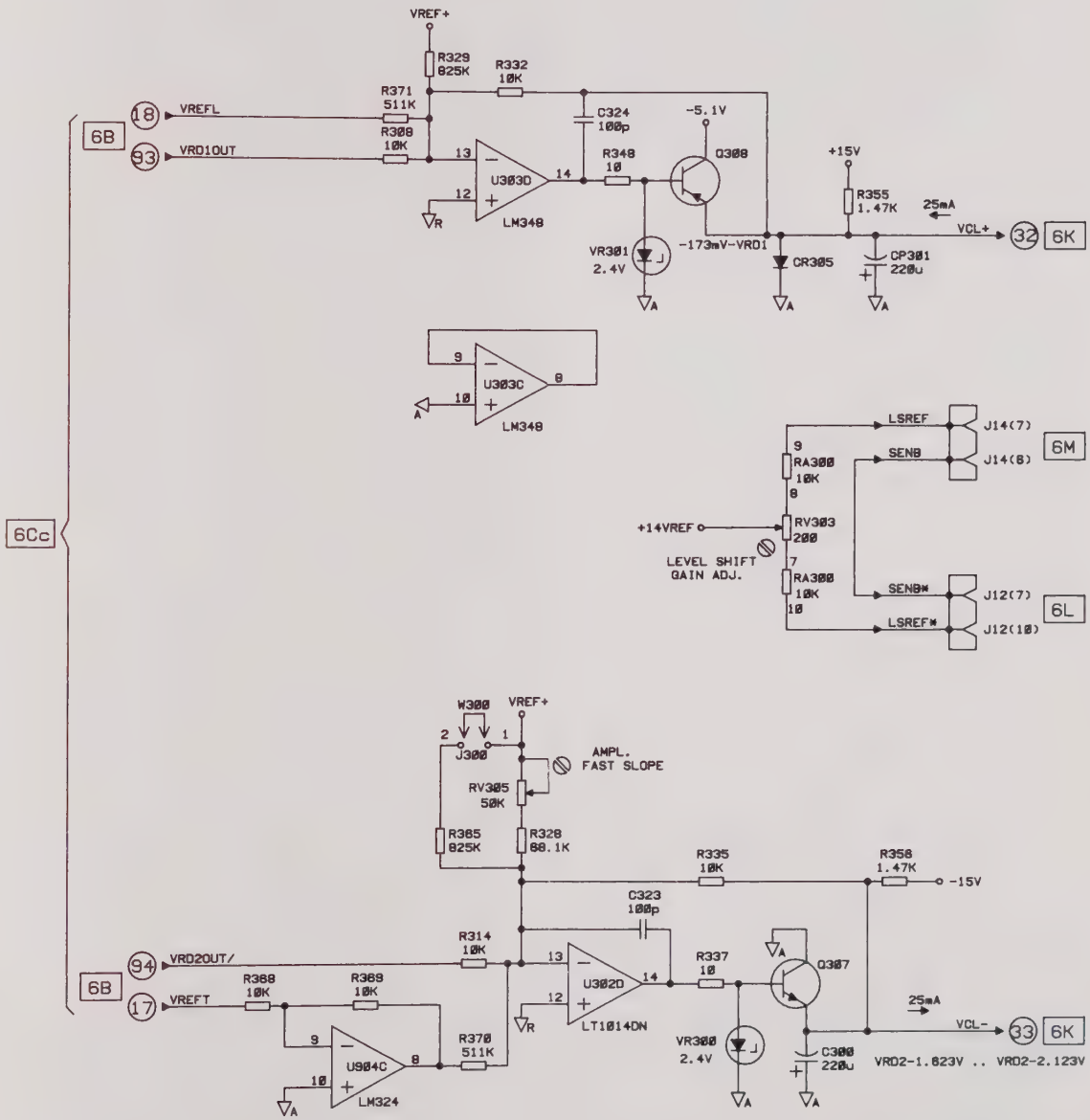

6C

MODEL HP8130A
FIGURE 6.5-22.
OUTPUT BOARD SCHEMATICS
(SHEET 1 OF 17)

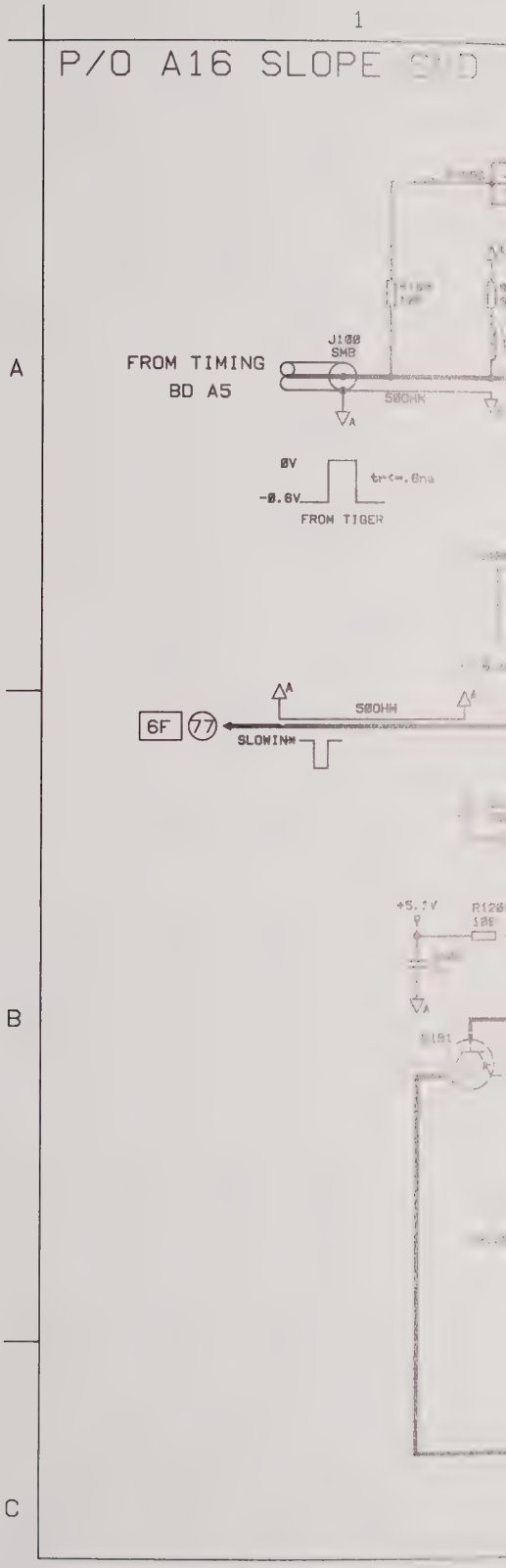
1
P/O A16 SLOPE
A
B
C
FROM TIMING
BD A5
J100
SMB
50OHM
0V
-0.6V
FROM TIGER
6F
77
SLOWIN*
50OHM

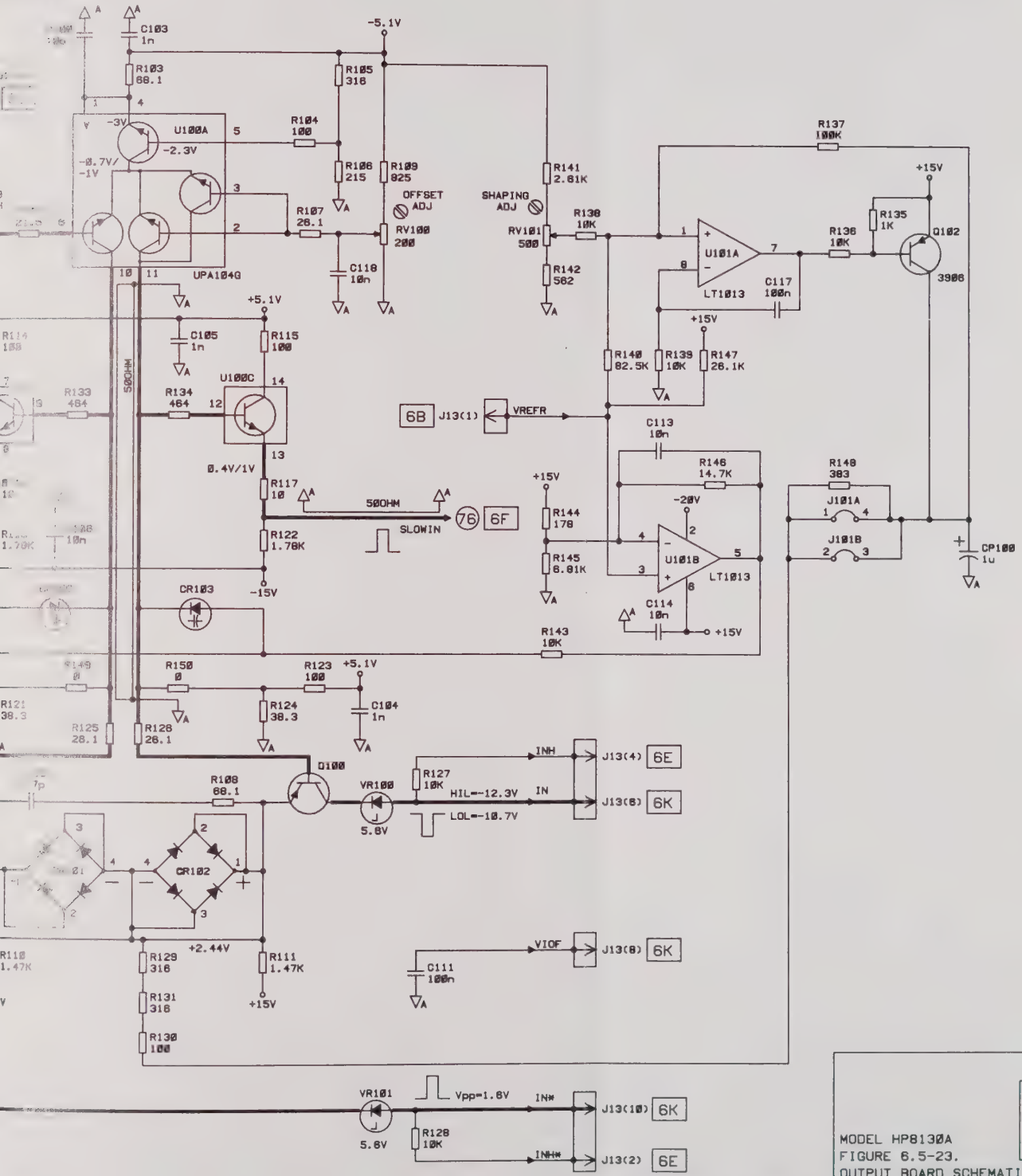

6D

MODEL HP8130A
FIGURE 6.5-23.
OUTPUT BOARD SCHEMATICS
(SHEET 5 OF 17)

P/O A6 OUTPUT BOARD

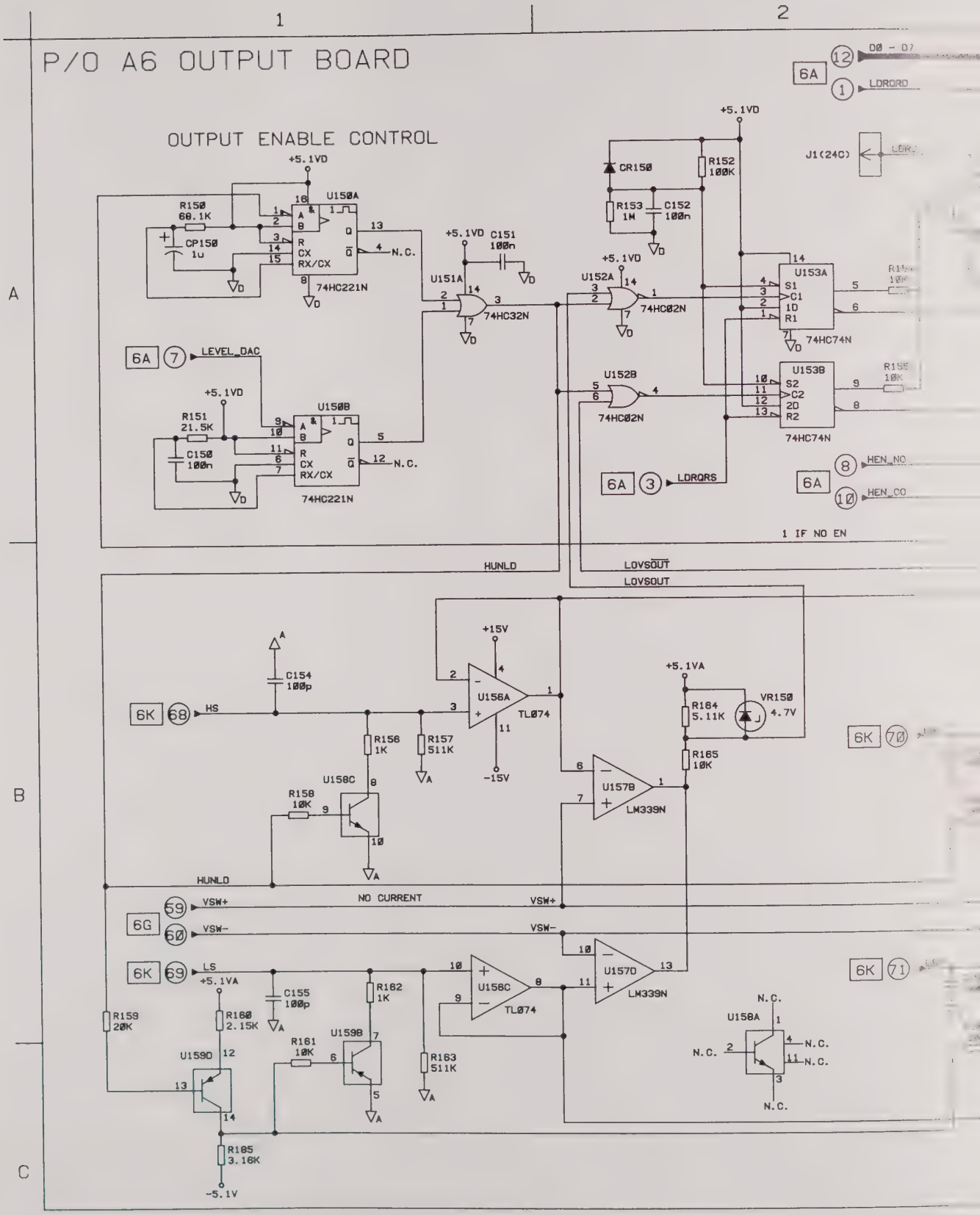

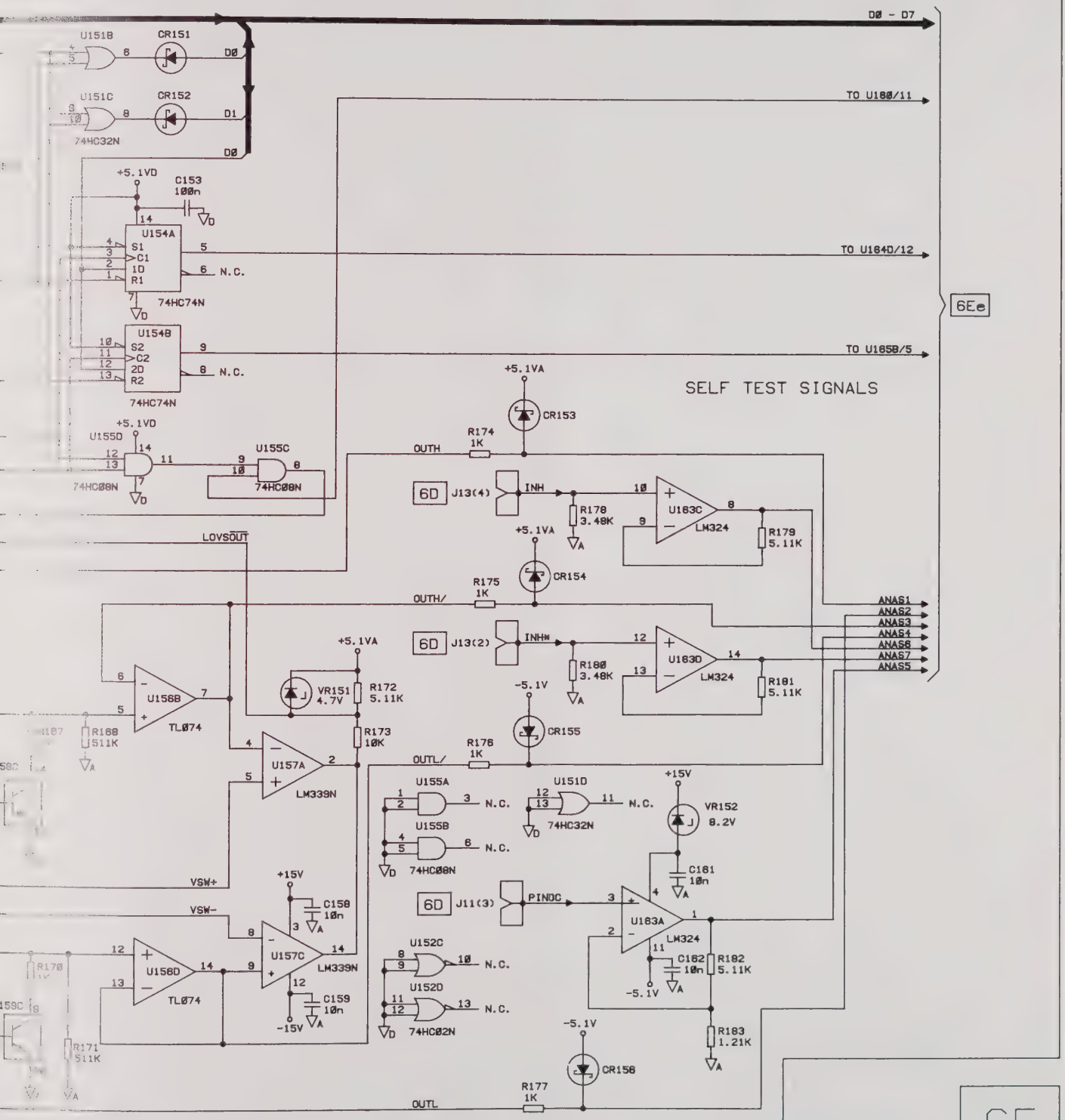

6E

MODEL HP8130A
FIGURE 6.5-24.
OUTPUT BOARD SCHEMATICS
(SHEET 6 OF 17)

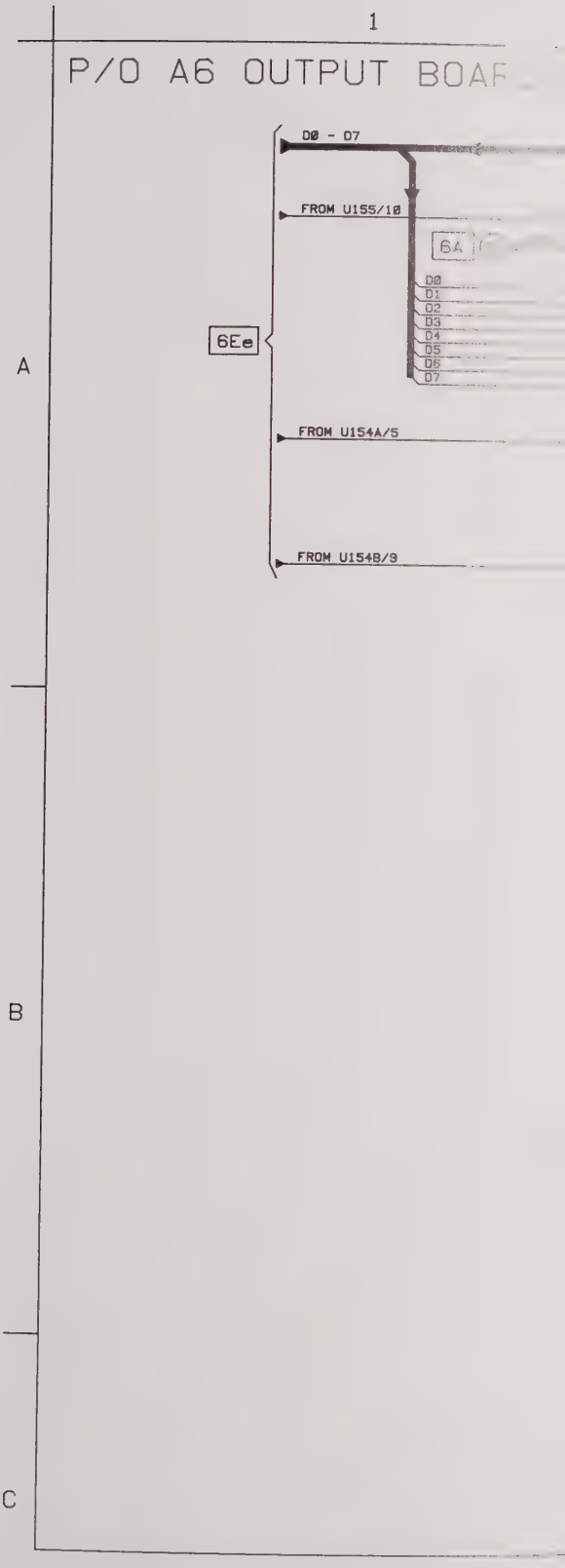
1
P/O A6 OUTPUT BOAF
D0 - D7
FROM U155/10
6A
D0
D1
D2
D3
D4
D5
D6
D7
6Ee
FROM U154A/5
FROM U154B/9
A
B
C

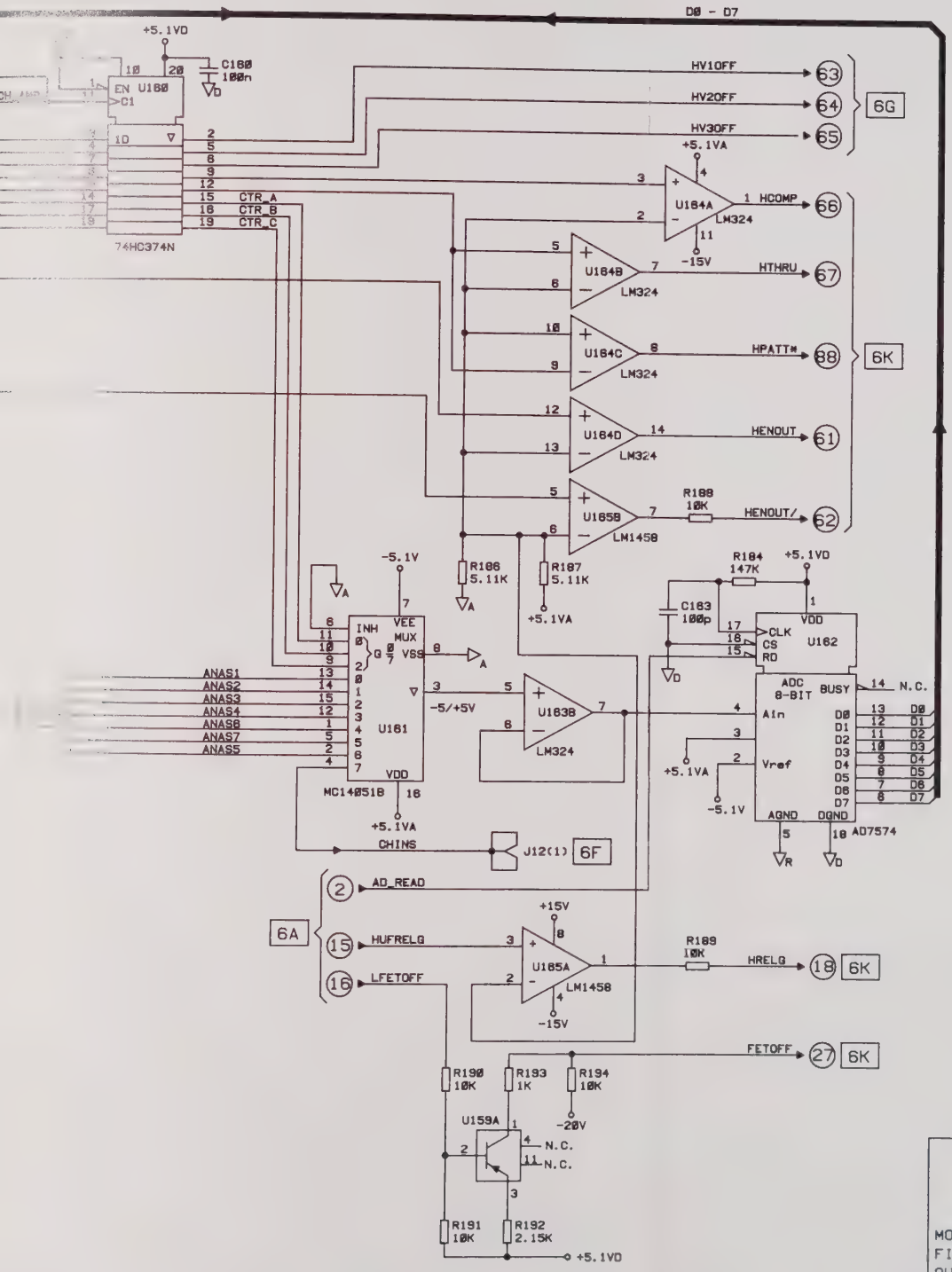

6E

MODEL HP8130A
FIGURE 6.5-25.
OUTPUT BOARD SCHEMATICS
(SHEET 7 OF 17)

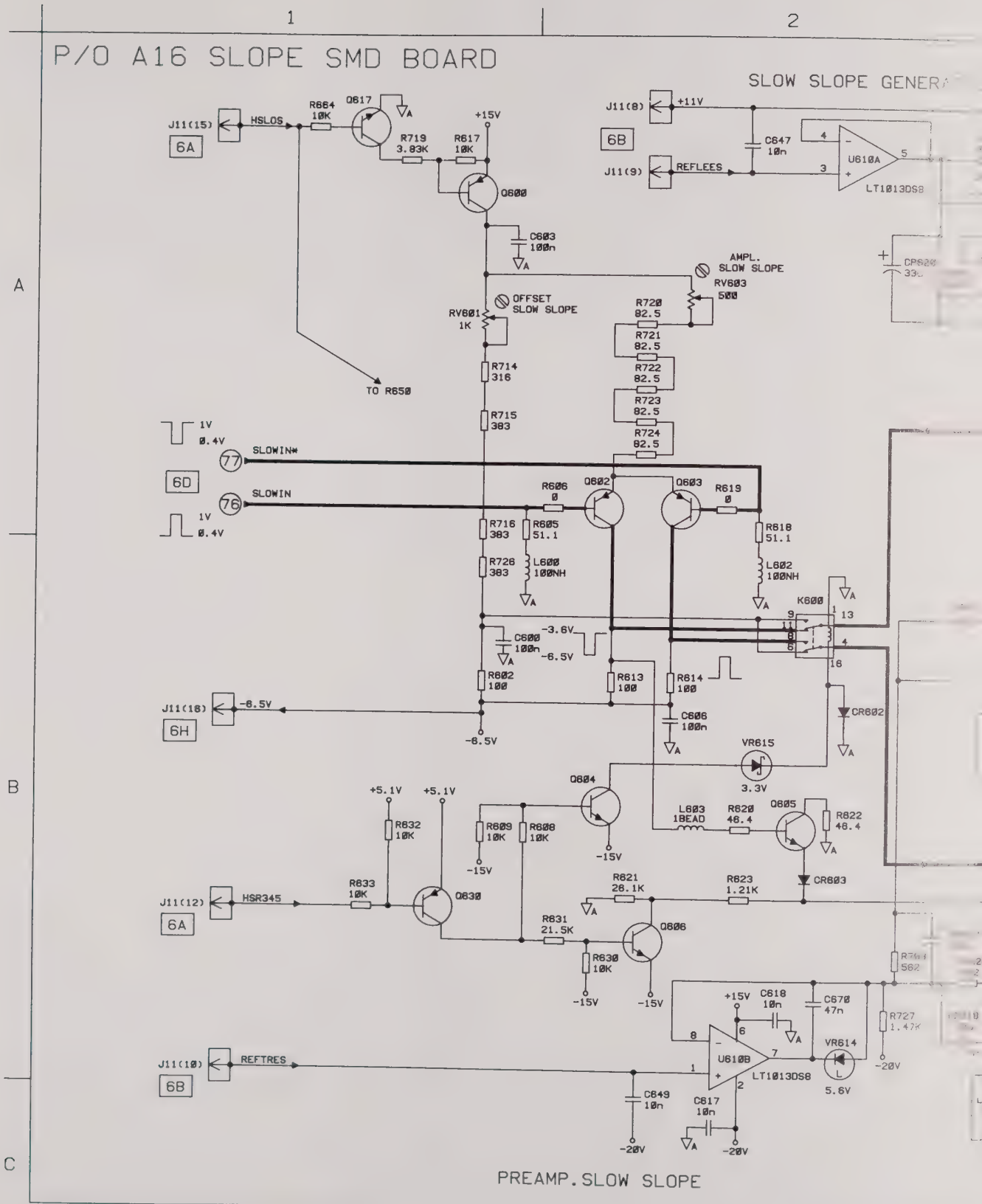
P/O A16 SLOPE SMD BOARD
SLOW SLOPE GENERA
PREAMP. SLOW SLOPE
J11(15)
HSLOS
6A
R664 10K
Q617
R719 3.83K
R617 10K
+15V
Q600
C603 100n
AMPL. SLOW SLOPE
RV603 500
OFFSET SLOW SLOPE
RV601 1K
TO R650
R720 82.5
R721 82.5
R722 82.5
R723 82.5
R724 82.5
R714 316
R715 383
J11(8)
+11V
6B
J11(9)
REFLEES
C647 10n
U610A
LT1013DS8
CP620 33
1V 0.4V
77
SLOWIN*
6D
76
SLOWIN
R606 0
Q602
Q603
R619 0
R716 383
R605 51.1
R726 383
L600 100NH
R618 51.1
L602 100NH
K600
C600 100n
-3.6V
-6.5V
R602 100
R613 100
R614 100
J11(18)
6H
C606 100n
CR602
VR615
3.3V
+5.1V
R832 10K
R609 10K
R608 10K
Q604
L603 1BEAD
R620 46.4
Q605
R822 46.4
CR603
J11(12)
HSR345
6A
R833 10K
Q630
R821 26.1K
R823 1.21K
R831 21.5K
Q606
R630 10K
R761 562
+15V
C618 10n
C670 47n
R727 1.47K
VR614
5.6V
-20V
J11(10)
REFTRES
6B
U610B
LT1013DS8
C649 10n
C617 10n

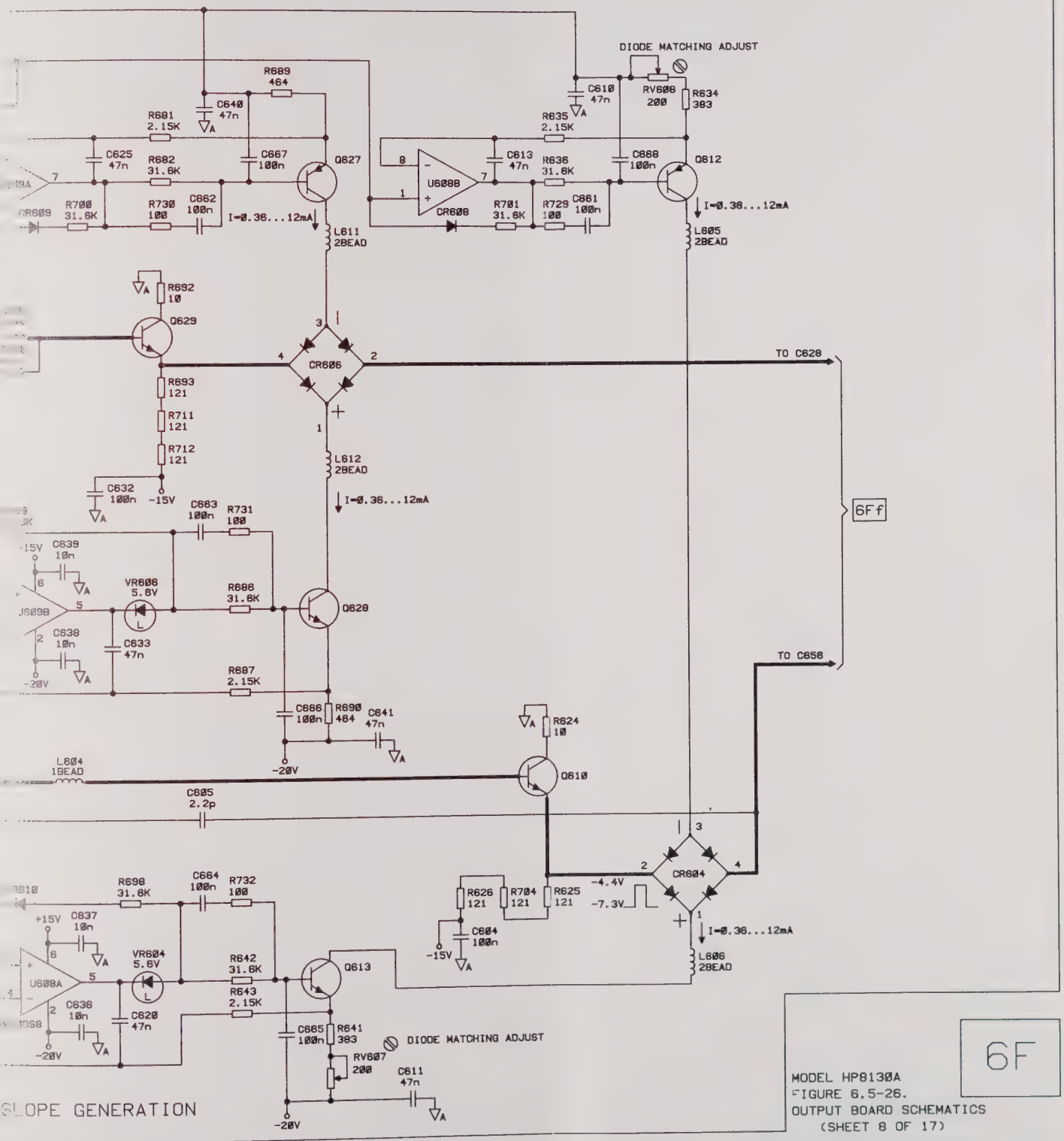

6F

MODEL HP8130A
FIGURE 6.5-26.
OUTPUT BOARD SCHEMATICS
(SHEET 8 OF 17)

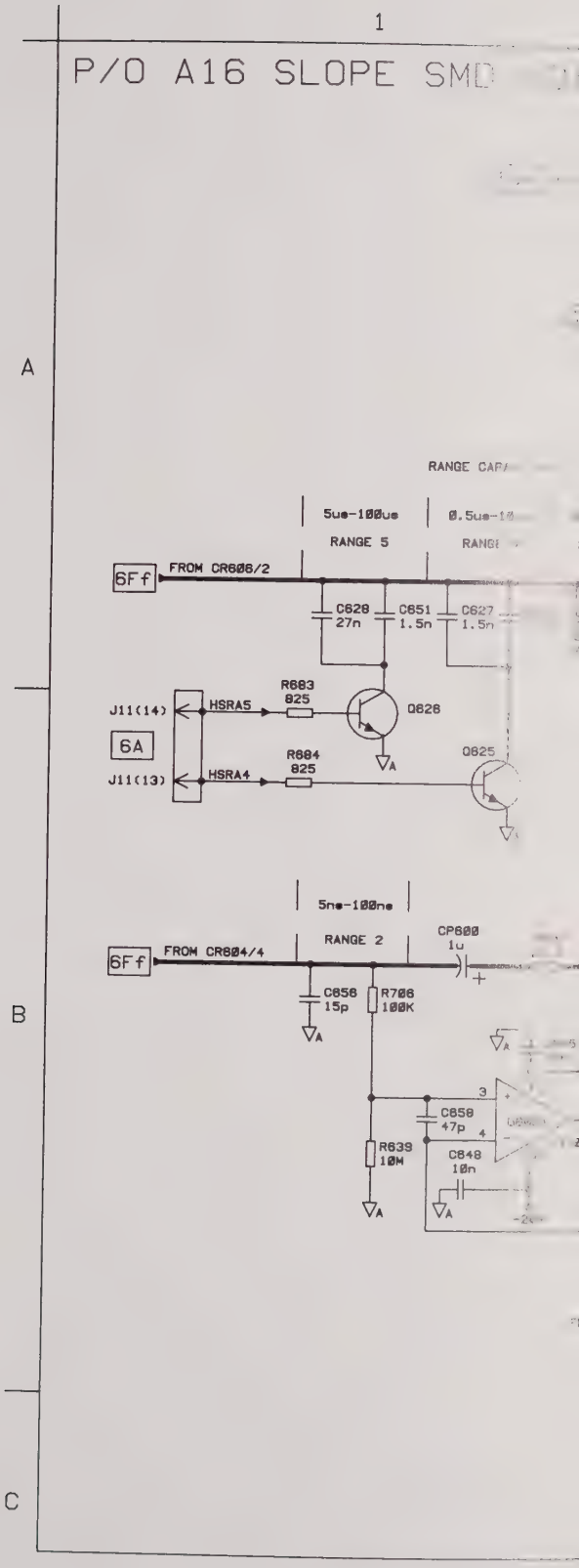
1
P/O A16 SLOPE SMD
A
B
C
RANGE CAP
5us-100us
RANGE 5
0.5us-1
RANGE
6Ff
FROM CR606/2
C628
27n
C651
1.5n
C627
1.5n
R683
825
J11(14)
HSRA5
Q626
6A
R684
825
Q625
J11(13)
HSRA4
5ns-100ns
RANGE 2
CP600
1u
6Ff
FROM CR604/4
C656
15p
R706
100K
C658
47p
R639
10M
C648
10n

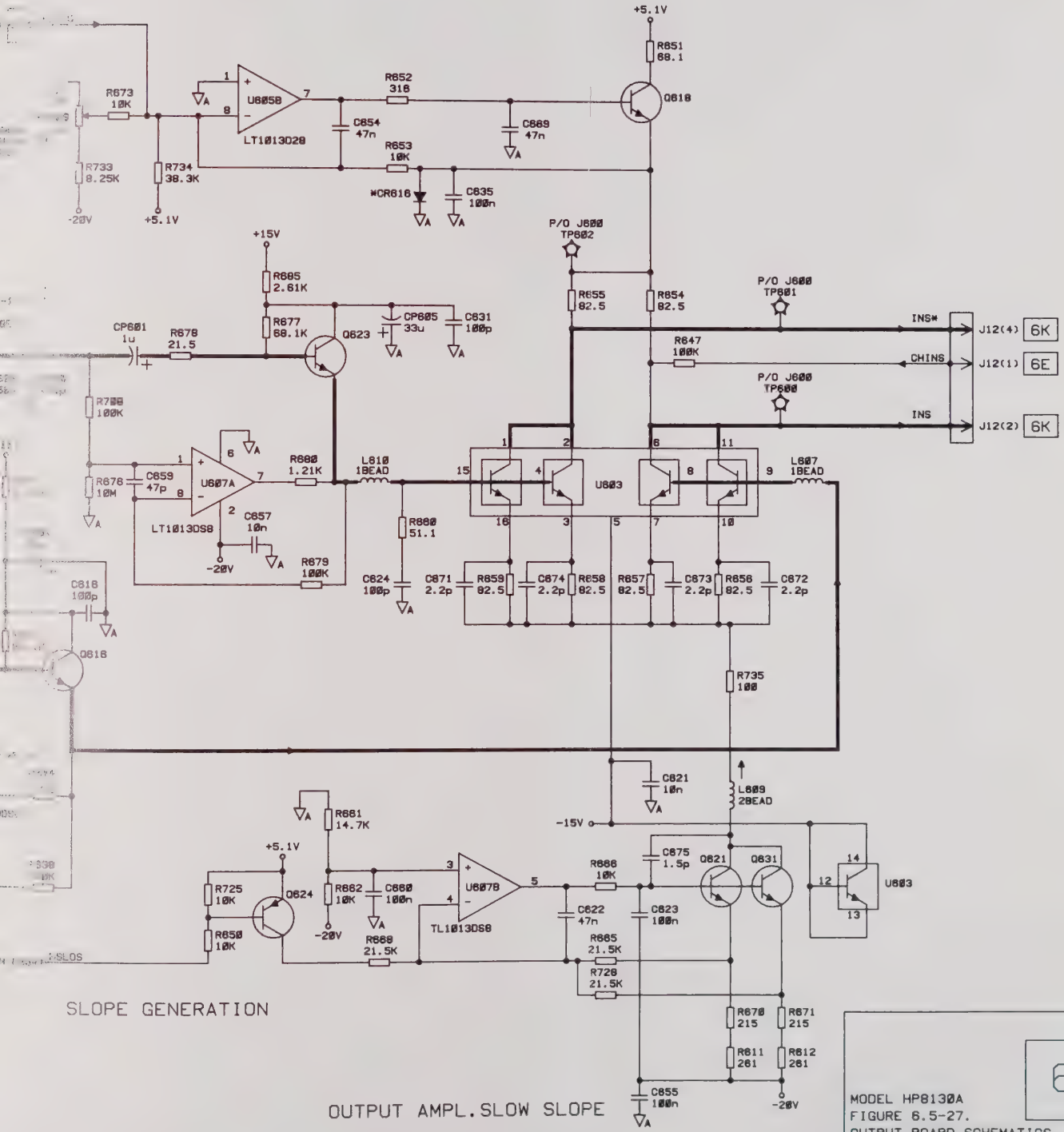

SLOPE GENERATION

OUTPUT AMPL. SLOW SLOPE

6F

MODEL HP8130A
FIGURE 6.5-27.
OUTPUT BOARD SCHEMATICS
(SHEET 9 OF 17)

P/O A6 OUTPUT BOARD

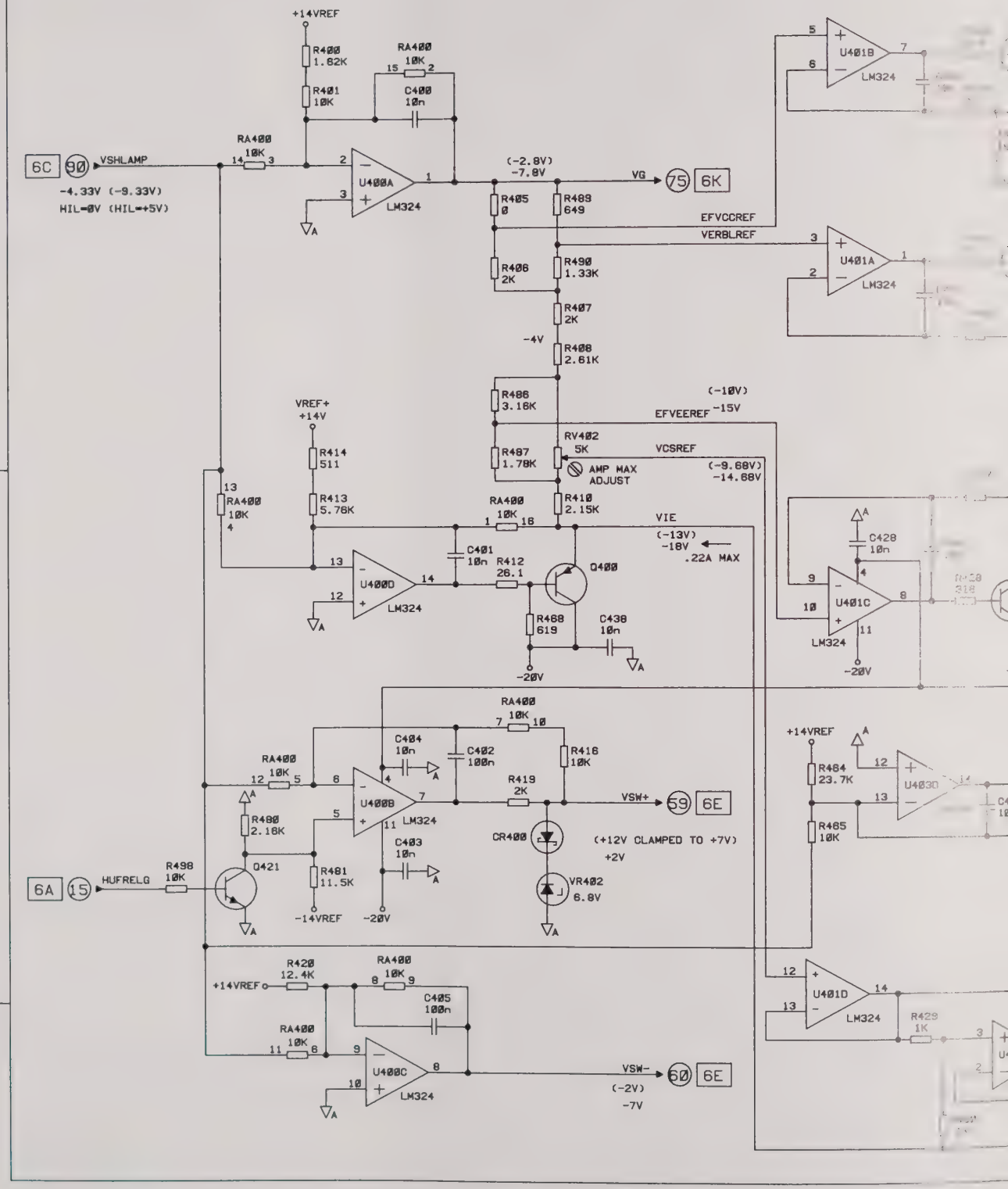

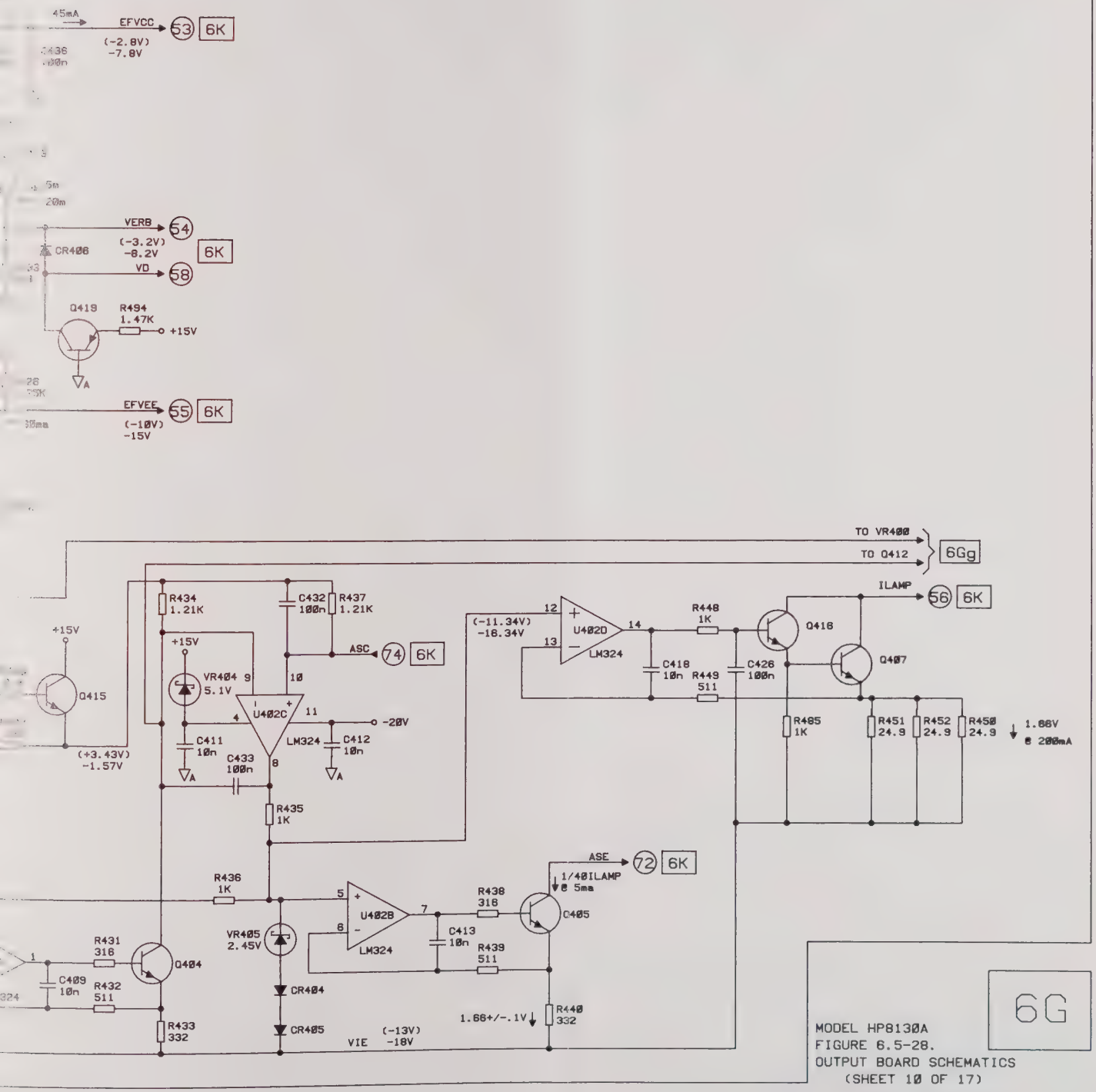

6G

MODEL HP8130A
FIGURE 6.5-28.
OUTPUT BOARD SCHEMATICS
(SHEET 10 OF 17)

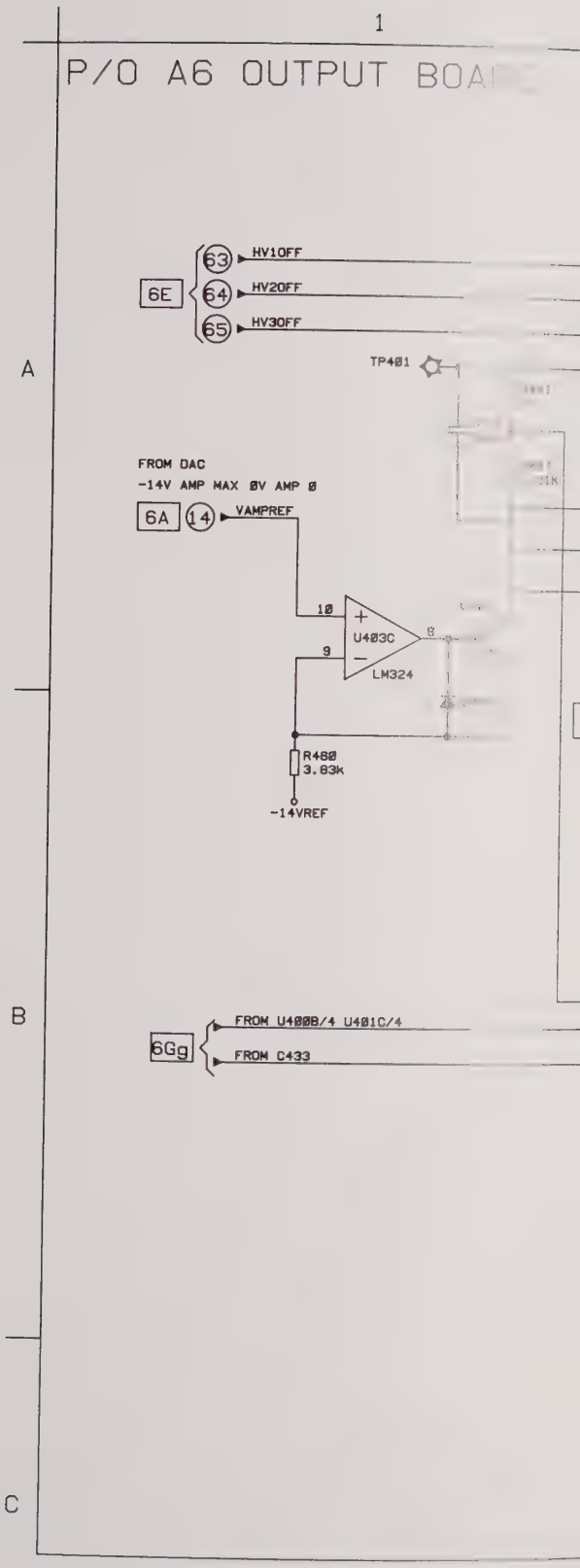
1
P/O A6 OUTPUT BOA
A
B
C
6E
63
HV1OFF
64
HV2OFF
65
HV3OFF
TP401
FROM DAC
-14V AMP MAX ØV AMP Ø
6A
14
VAMPREF
10
9
U403C
LM324
8
R480
3.83k
-14VREF
6Gg
FROM U400B/4 U401C/4
FROM C433

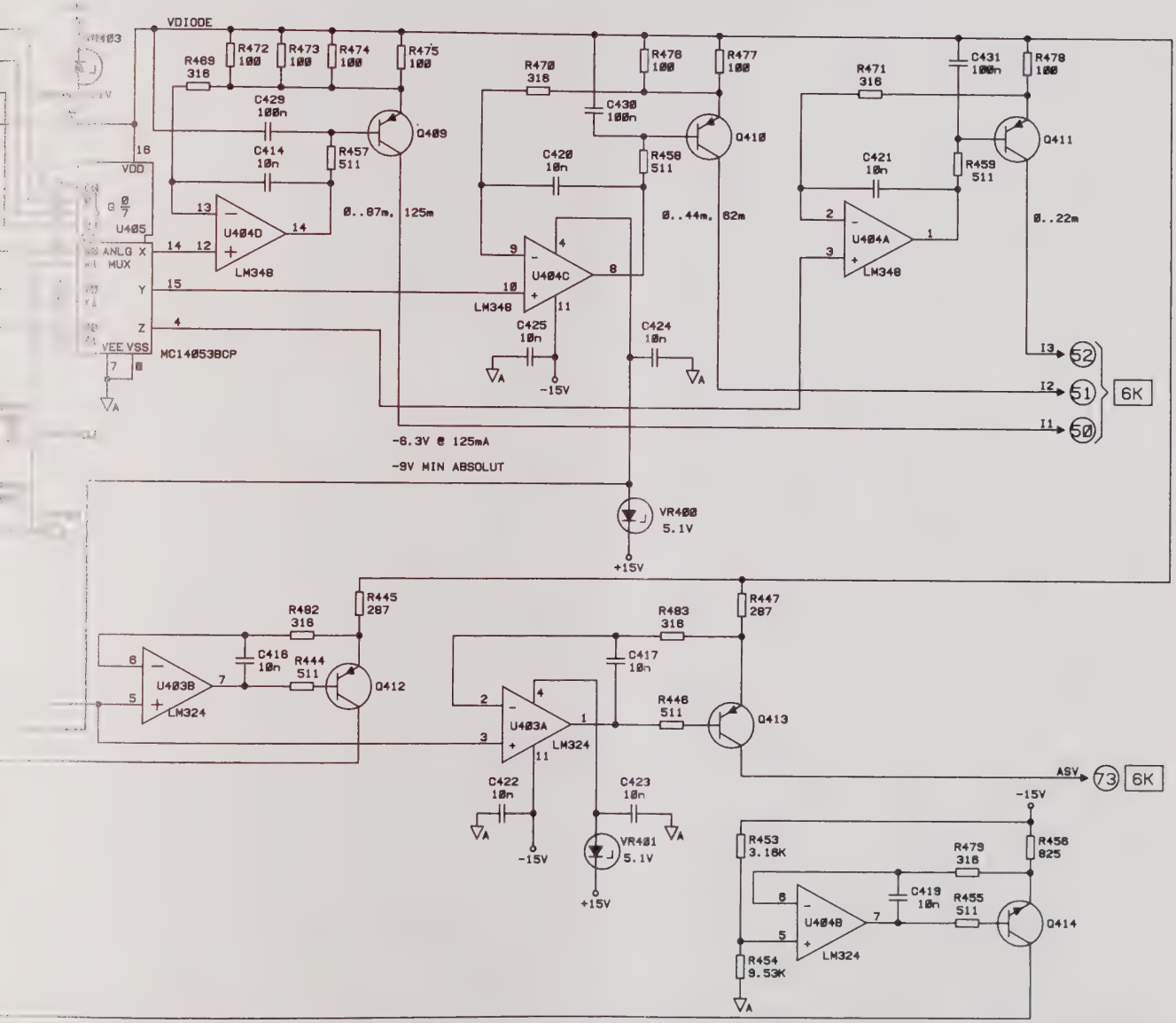

6G

MODEL HP8130A
FIGURE 6.5-29.
OUTPUT BOARD SCHEMATICS
(SHEET 11 OF 17)

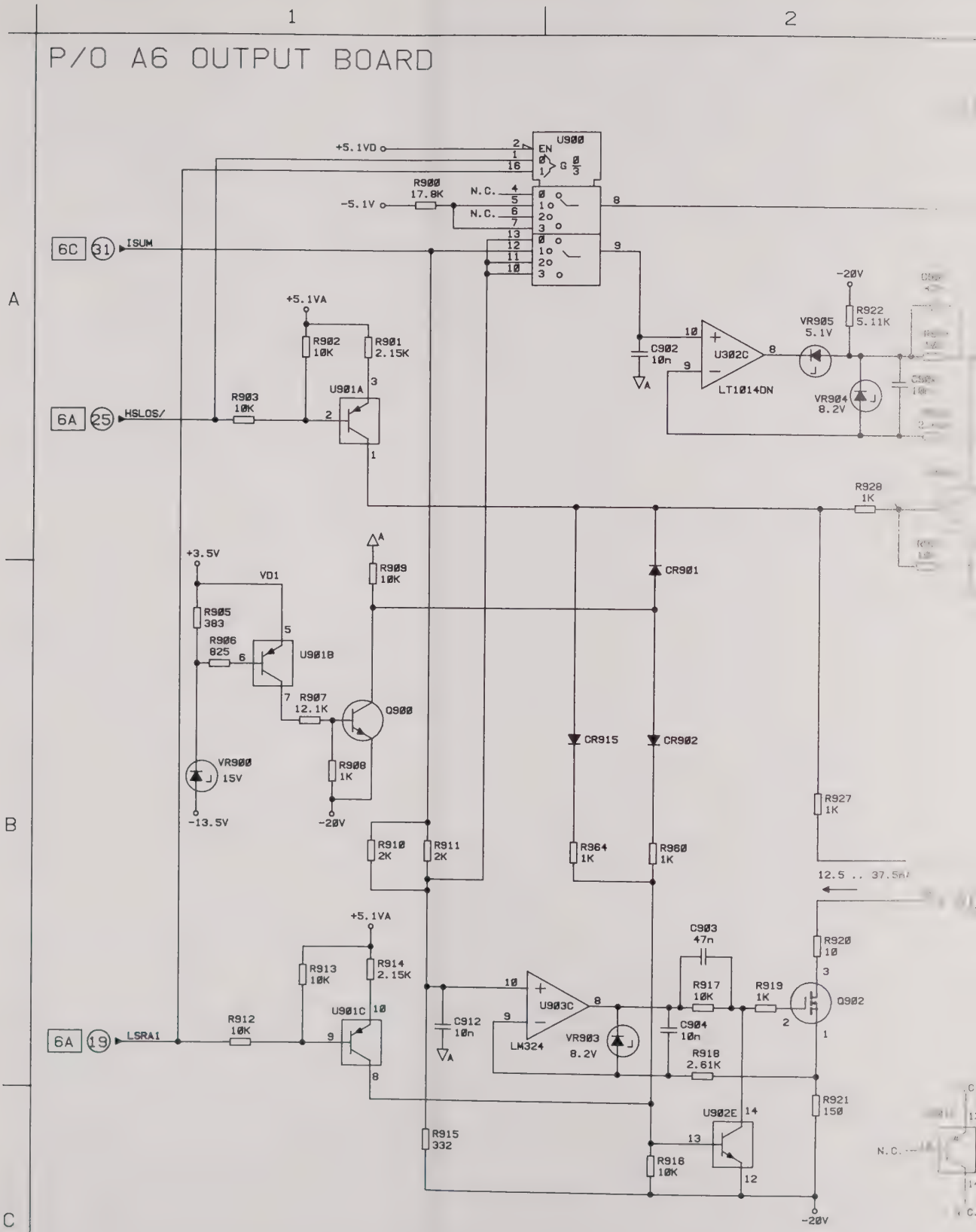
1
2
A
B
C
P/O A6 OUTPUT BOARD
+5.1VD
U900
EN
G
R900
17.8K
-5.1V
N.C.
N.C.
6C
31
ISUM
+5.1VA
R902
10K
R901
2.15K
R903
10K
6A
25
HSLOS/
U901A
C902
10n
U302C
LT1014DN
-20V
R922
5.11K
VR905
5.1V
VR904
8.2V
R928
1K
+3.5V
VD1
R905
383
R906
825
U901B
R907
12.1K
Q900
R908
1K
VR900
15V
-13.5V
-20V
R909
10K
CR901
CR915
CR902
R964
1K
R960
1K
R927
1K
12.5 .. 37.5mA
R910
2K
R911
2K
+5.1VA
R913
10K
R914
2.15K
U901C
R912
10K
6A
19
LSRA1
C912
10n
U903C
LM324
VR903
8.2V
C903
47n
R917
10K
R919
1K
Q902
C904
10n
R918
2.61K
R920
10
R921
150
U902E
R916
10K
R915
332
-20V
N.C.

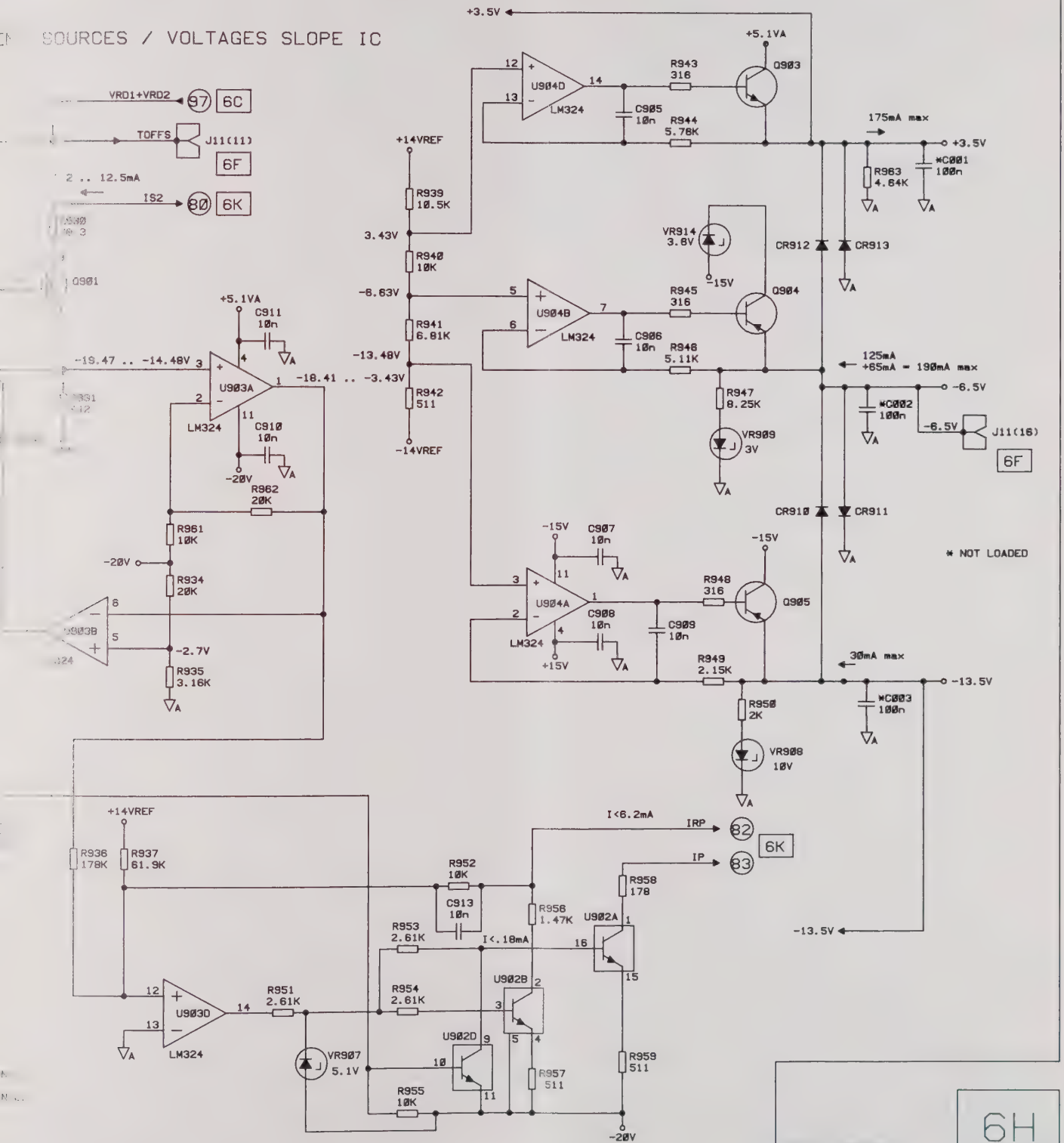
SOURCES / VOLTAGES SLOPE IC
VRD1+VRD2
97
6C
TOFFS
J11(11)
6F
2 .. 12.5mA
IS2
80
6K
+3.5V
+5.1VA
U904D
LM324
R943 316
Q903
C905 10n
R944 5.78K
175mA max
R963 4.64K
*C001 100n
+14VREF
R939 10.5K
3.43V
R940 10K
-8.63V
R941 6.81K
-13.48V
R942 511
-14VREF
VR914 3.8V
-15V
CR912
CR913
U904B
LM324
R945 316
Q904
C906 10n
R946 5.11K
125mA
+65mA = 190mA max
R947 8.25K
VR909 3V
-6.5V
*C002 100n
J11(16)
6F
CR910
CR911
* NOT LOADED
-19.47 .. -14.48V
U903A
LM324
C911 10n
C910 10n
-20V
R962 20K
-18.41 .. -3.43V
R961 10K
R934 20K
-2.7V
R935 3.16K
U903B
U904A
LM324
C907 10n
C908 10n
C909 10n
R948 316
Q905
R949 2.15K
30mA max
-13.5V
*C003 100n
R950 2K
VR908 10V
+14VREF
R936 178K
R937 61.9K
I<6.2mA
IRP
82
6K
IP
83
R952 10K
C913 10n
R953 2.61K
I<.18mA
R956 1.47K
U902A
R958 178
-13.5V
U903D
LM324
R951 2.61K
R954 2.61K
U902B
U902D
VR907 5.1V
R955 10K
R957 511
R959 511
-20V
6H
MODEL HP8130A
FIGURE 6.5-30.
OUTPUT BOARD SCHEMATICS
(SHEET 12 OF 17)

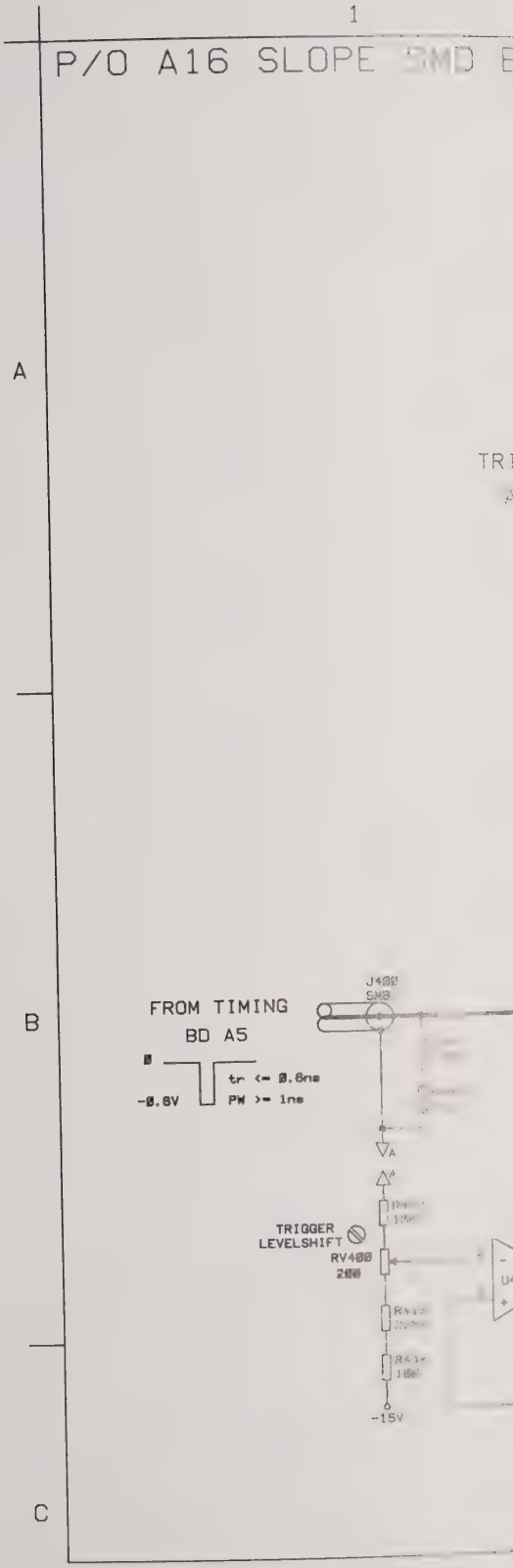
1
P/O A16 SLOPE SMD E
A
B
C
FROM TIMING
BD A5
0
-0.8V
tr <= 0.6ns
PW >= 1ns
J400
SMB
TRIGGER
LEVELSHIFT
RV400
200
-15V

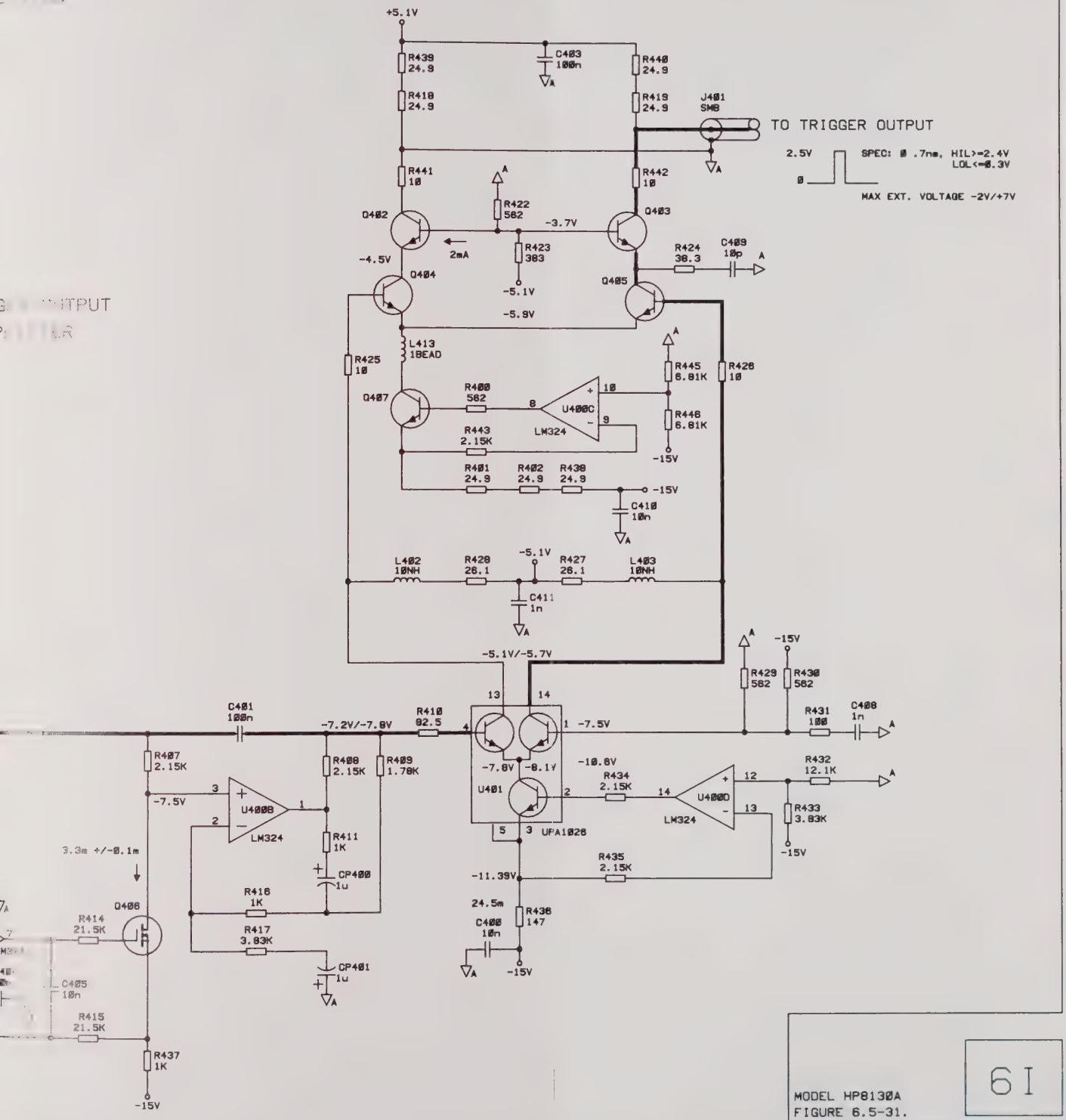

MODEL HP8130A
FIGURE 6.5-31.
OUTPUT BOARD SCHEMATICS
(SHEET 13 OF 17)

61

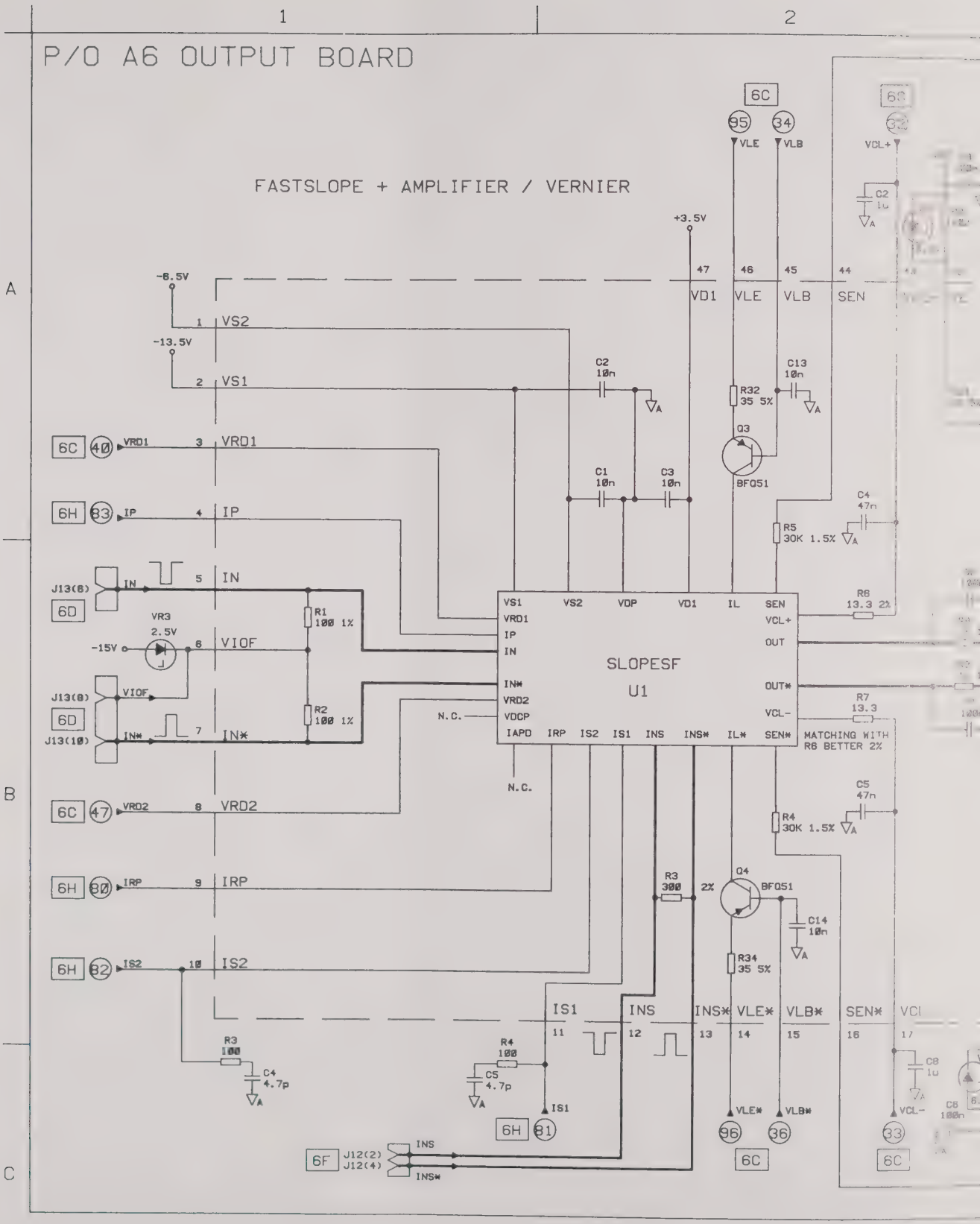
P/O A6 OUTPUT BOARD
FASTSLOPE + AMPLIFIER / VERNIER
SLOPESF
U1
VS1
VS2
VRD1
IP
IN
VIOF
IN*
VRD2
IRP
IS2
VDP
VDCP
IAPD
IL
IL*
SEN
SEN*
VCL+
VCL-
OUT
OUT*
IS1
INS
INS*
VLE*
VLB*
VLE
VLB
VD1
SEN
+3.5V
-8.5V
-13.5V
-15V
VR3
2.5V
J13(8)
J13(10)
J12(2)
J12(4)
R1
100 1%
R2
100 1%
R3
100
R4
100
R5
30K 1.5%
R6
13.3 2%
R7
13.3
R32
35 5%
R34
35 5%
R3
300
2%
C1
10n
C2
10n
C3
10n
C4
47n
C5
47n
C13
10n
C14
10n
C2
1u
C8
1u
C6
100n
C4
4.7p
C5
4.7p
Q3
BFQ51
Q4
BFQ51
MATCHING WITH
R6 BETTER 2%
N.C.
6C
6D
6H
6F
A
B
C
1
2

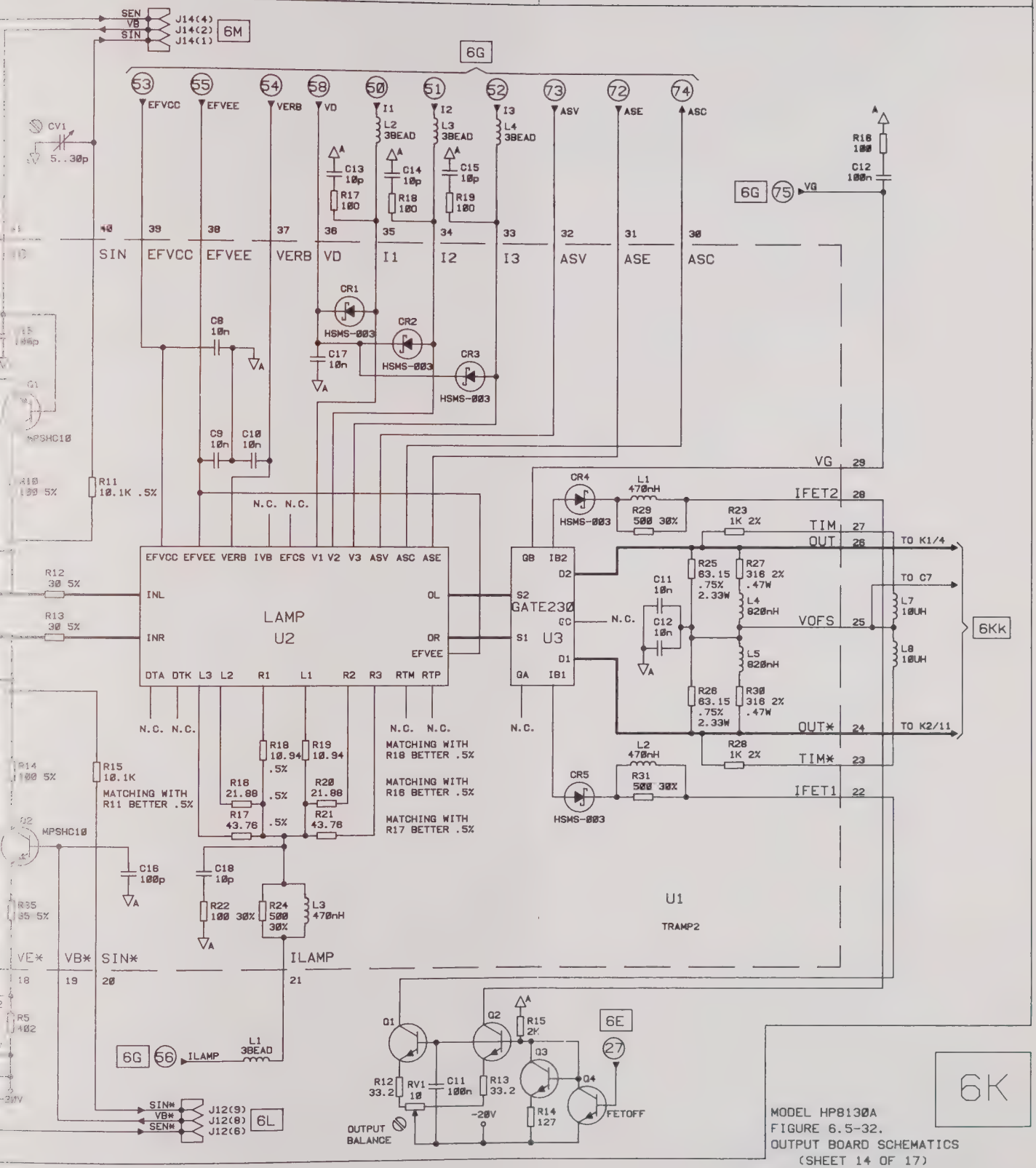

MODEL HP8130A
FIGURE 6.5-32.
OUTPUT BOARD SCHEMATICS
(SHEET 14 OF 17)

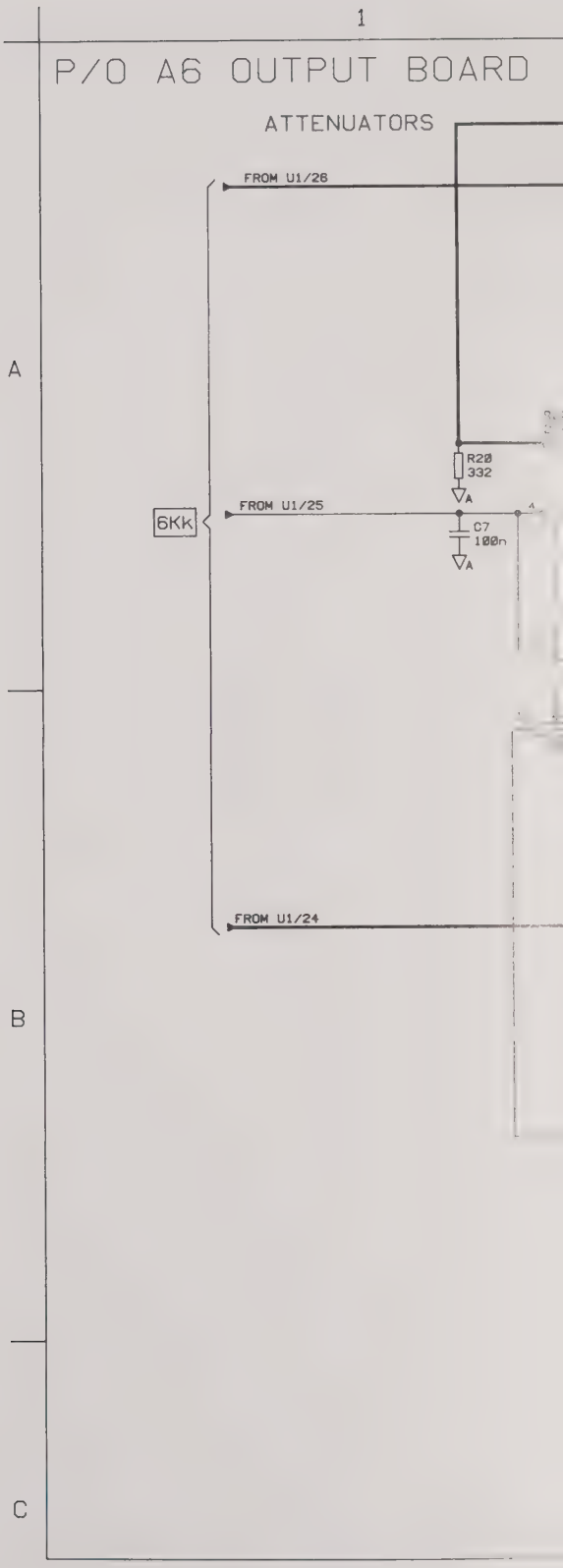
1
P/O A6 OUTPUT BOARD
ATTENUATORS
FROM U1/26
A
R20
332
FROM U1/25
6KK
C7
100n
FROM U1/24
B
C

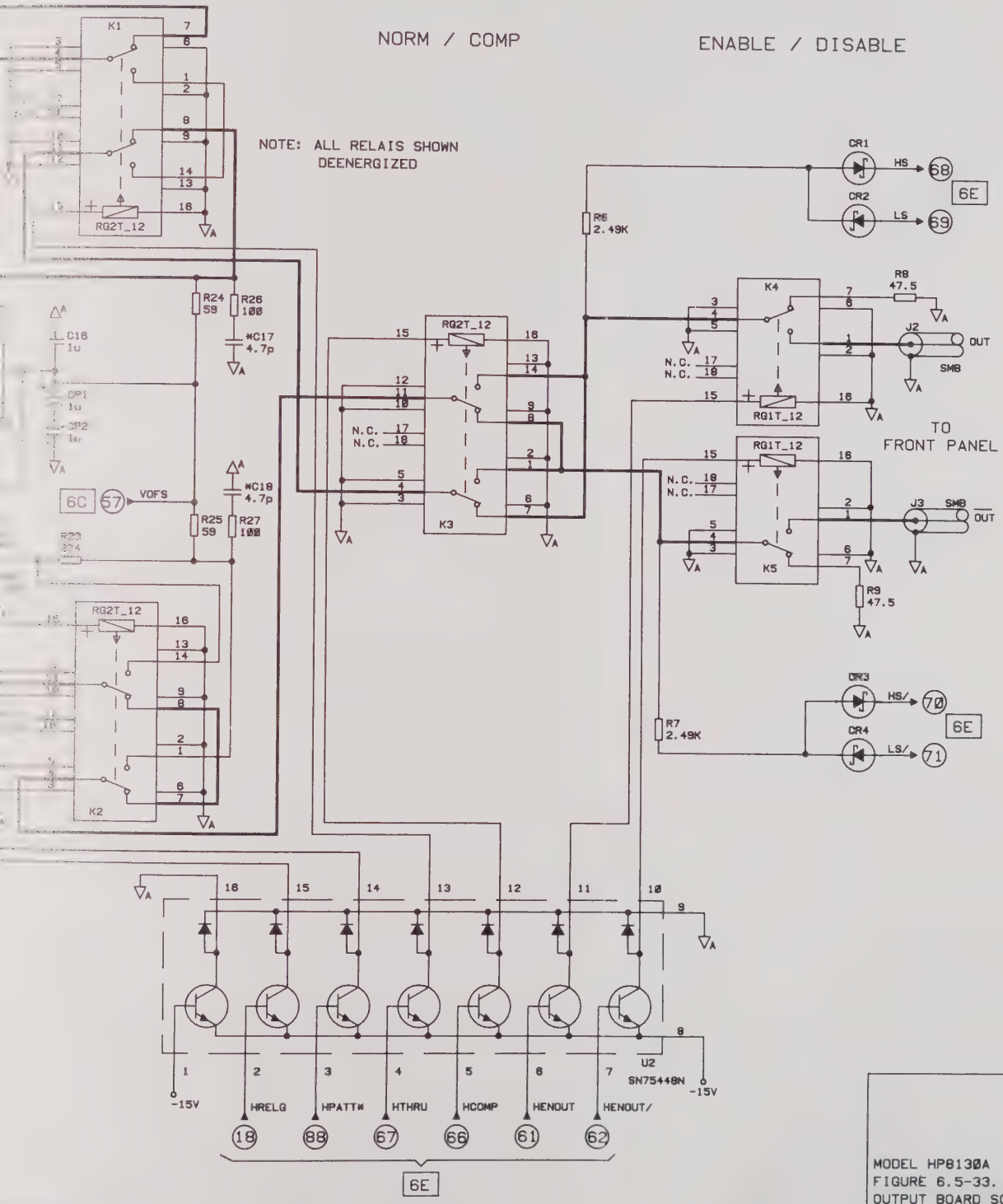

6K

MODEL HP8130A
FIGURE 6.5-33.
OUTPUT BOARD SCHEMATICS
(SHEET 15 OF 17)

P/O A16 SLOPE SMD BOARD

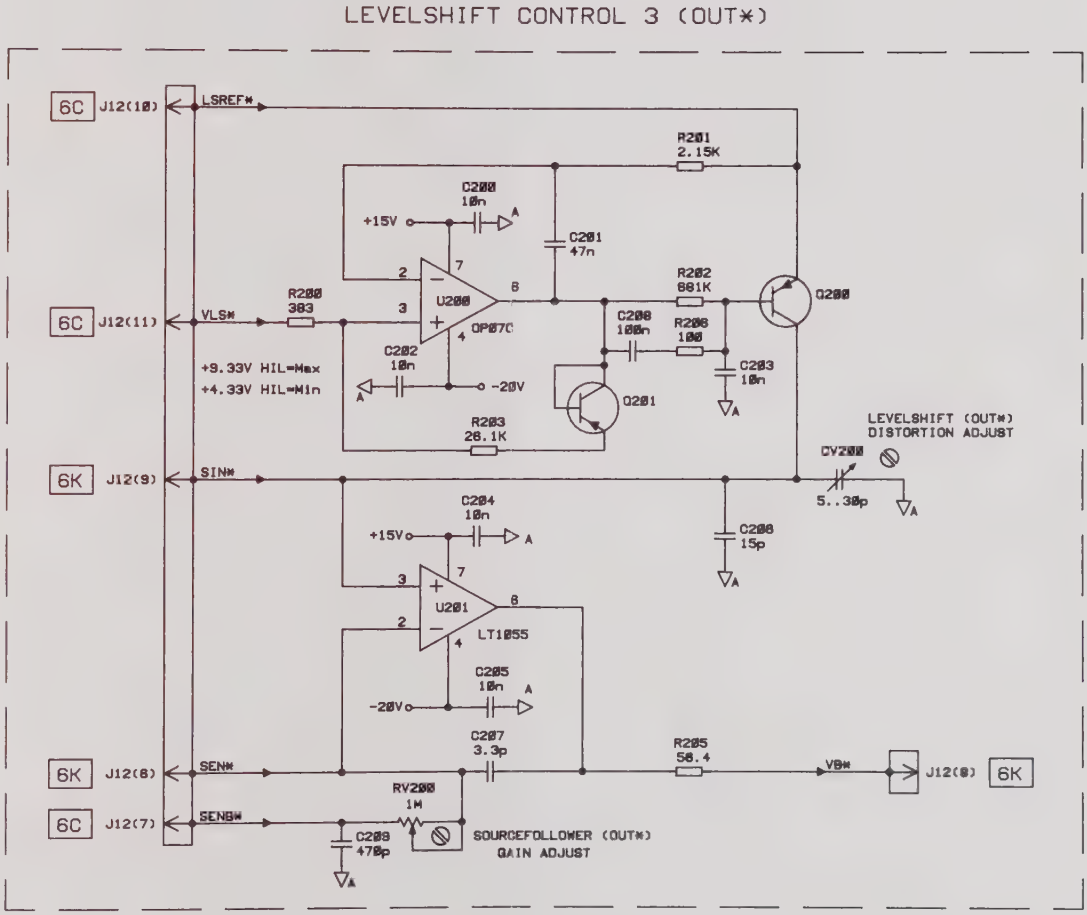

6L

MODEL HP8130A
FIGURE 6.5-34.
OUTPUT BOARD SCHEMATICS
(SHEET 16 OF 17)

P/O A16 SLOPE SMD BOARD

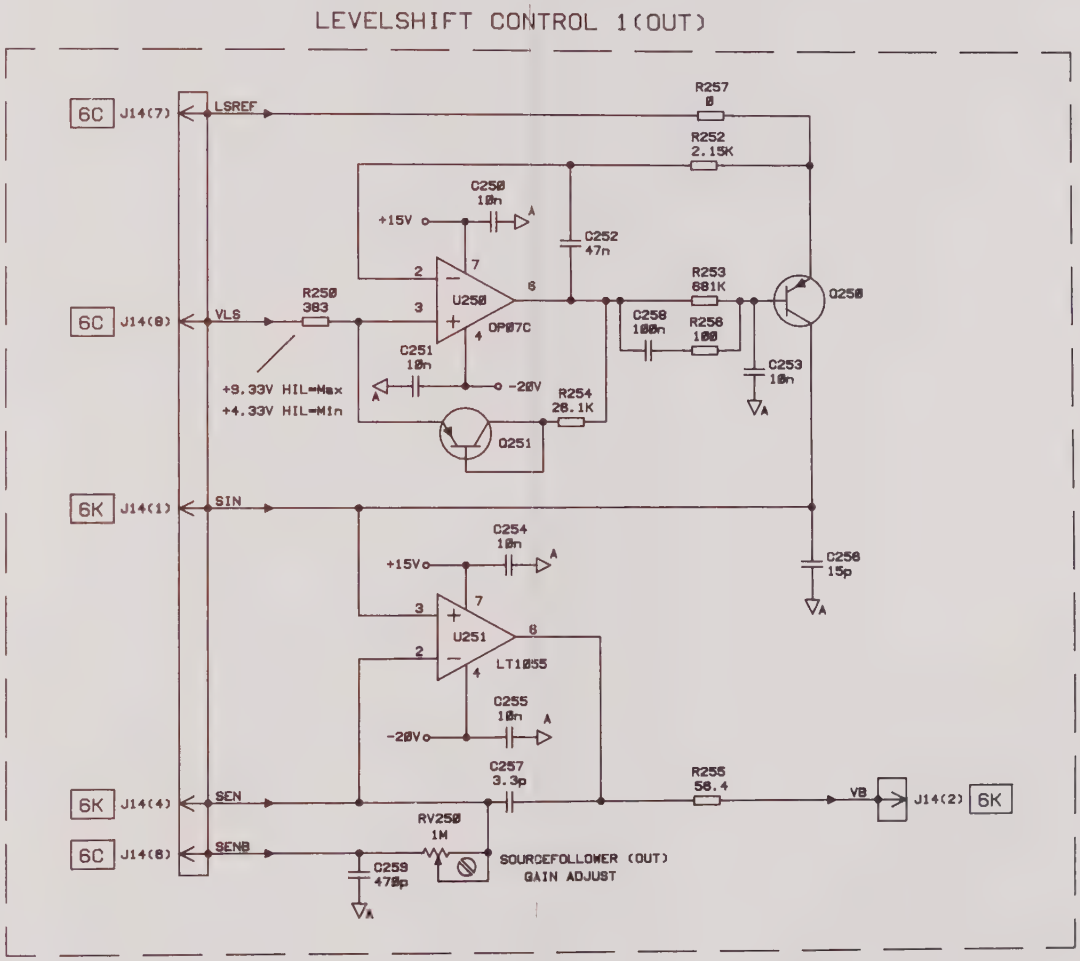

6M

MODEL HP8130A
FIGURE 6.5-35.
OUTPUT BOARD SCHEMATICS
(SHEET 17 OF 17)

6-6

HP 8131A Output Board (A26; option 020 - A27/A28)

Introduction

The output board consists of:

- the transducer board
- the output amplifier hybrid (GaAs, IC U401)
- the enable/disable switch

The input signal (PULSE IN) together with the period, delay, and width parameters is amplified by the transducer board and the output amplifier hybrid, to determine the output levels and the fixed fast transition time.

For a programmed width of less than 1 ns the transducer board reduces the input width by 500 ps. The normal/complement switch is part of the transducer board.

Block Theory of Operation

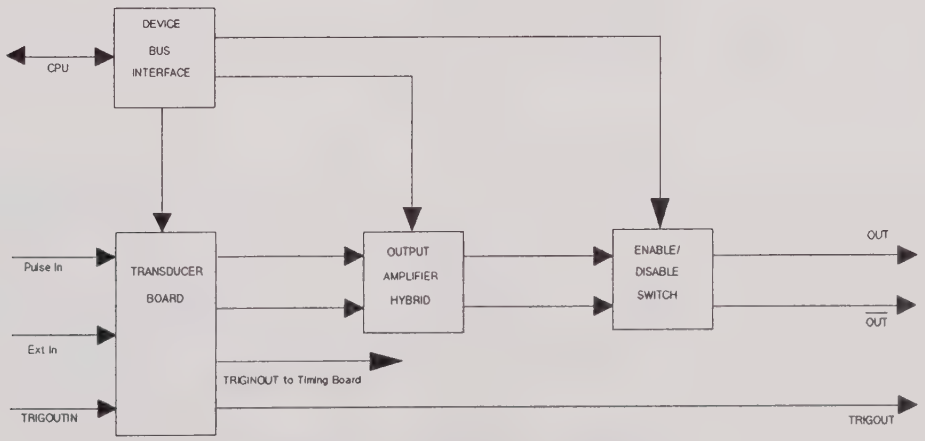

Figure 6-6-1. Module Block Diagram

Transducer Board

The transducer board is the interface between the timing board and the output amplifier. The transducer board provides the following functions:

- shaping and refreshing of the input signals from the timing board
- normal/complement switching
- generation of a pulse width less than 1 ns
- restoration of an external sinewave signal (in transducer mode)

Output Amplifier Hybrid

This block is responsible for producing the final output signal at the HP 8131A front panel. The input signal, (from the transducer board) is amplified and shaped by the cascade of a bipolar differential amplifier and the Gallium Arsenide (GaAs) IC U401. The output amplitude is determined by control currents and the output HIgh Level (HIL) by a control voltage.

The bipolar differential amplifier and the IC U401 are AC coupled. The level shift control circuit bypasses the low frequency part of the signal spectrum including the negative DC offset voltage from the IC U401 inputs.

Enable/Disable Switch

During power-on, the hardware ensures the relays are disabled.

Transducer Board

Transducer Mode

In the transducer mode, the timing board input is switched out. A sinewave signal from the external signal is applied to the transducer, which comprises two cascaded differential amplifiers, used as pre-shapers. A diode clamping circuit is used to protect the transducer input from a high voltage input. The shaped signal output from the transducer is applied to one input of a NOR-gate. The output of the NOR-gate is then processed by successive differential amplifier stages. These five stages ensure the output amplifier hybrid receives a rectangular signal with a transition time of less than 300 ps.

Short Pulse Mode

In this mode, pulses with a width between 500 ps and 990 ps can be generated.

The signal from the timing board (between 1.5 ns and 1 ns) is divided into two parts. The first part is fed directly to the first input of a NOR-gate. The second part is fed to the second input of the NOR-gate via a 500 ps delay line. Thus, the output from the NOR-gate is 500 ps shorter than the input from the timing board. The NOR-gate output is refreshed by two differential amplifier stages (see figure overleaf).

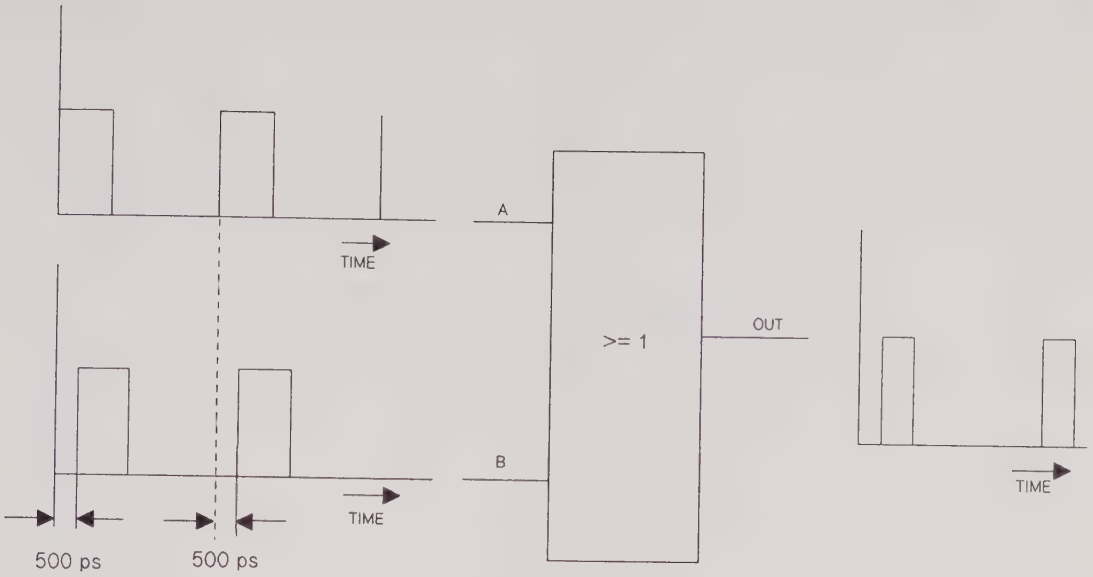

Figure 6-6-2. Short Pulse Mode

Norm/Complement Switch

After the NOR-gate mentioned above the signal can be switched from the normal mode to the complement mode by means of a relay.

Trigger Output Amplifier

This circuit refreshes the trigger signal from the timing board and drives an external 50 Ω load with EECL levels (0.6 Vp-p). The output is voltage protected against external voltages that exceed a ±5 V window. This is accomplished by a diode bridge.

Output Amplifier Hybrid

Introduction

This block is responsible for producing the final output signal at the HP 8131A front panel. The input signal, (from the transducer board) is amplified and shaped by the cascade of a bipolar differential amplifier and the GaAs IC U401. The output amplitude is determined by control currents and the output HIgh Level (HIL) by a control voltage.

The ALADIN consists of three parts:

- PREAMPLIFIER: The differential input signal (1.2 Vp-p/350 ps) is amplified by a fully switched differential amplifier to obtain the logic levels (3.5 Vp-p/350 ps).
- SHAPER: A fully switched differential amplifier shapes the signal to provide 4 Vp-p/150 ps.

- LINE DRIVER: There are two line drivers in parallel, scaled by 1:7. For large amplitudes (5 V to 0.63 V) both drivers switch the drive current. For small amplitudes only the small amplifier switches the drive current.

Amplitude Control

The output amplitude is controlled by the large driver current (ID1) and the small driver current (ID2) within two ranges:

- Range 1:
  - Vout = 5 V to 0.630 V, 50 Ω external load
  - ID1 = 175 mA to 22.1 mA
  - ID2 = 25 mA to 3.2 mA
- Range 2:
  - Vout = 0.620 V to 0.100 V, 50 Ω external load
  - ID1 = 0
  - ID2 = 25 mA to 2 mA

The preamplifier and shaper voltage swings are reduced with the output amplitude to keep overdrive and output overshoot reasonably constant. The preamplifier voltage is controlled by the current IP and, that of the shaper by IS. They are both determined by the programmed amplitude and the on-chip resistors. The following figure shows the voltage swing as a function of the programmed amplitude.

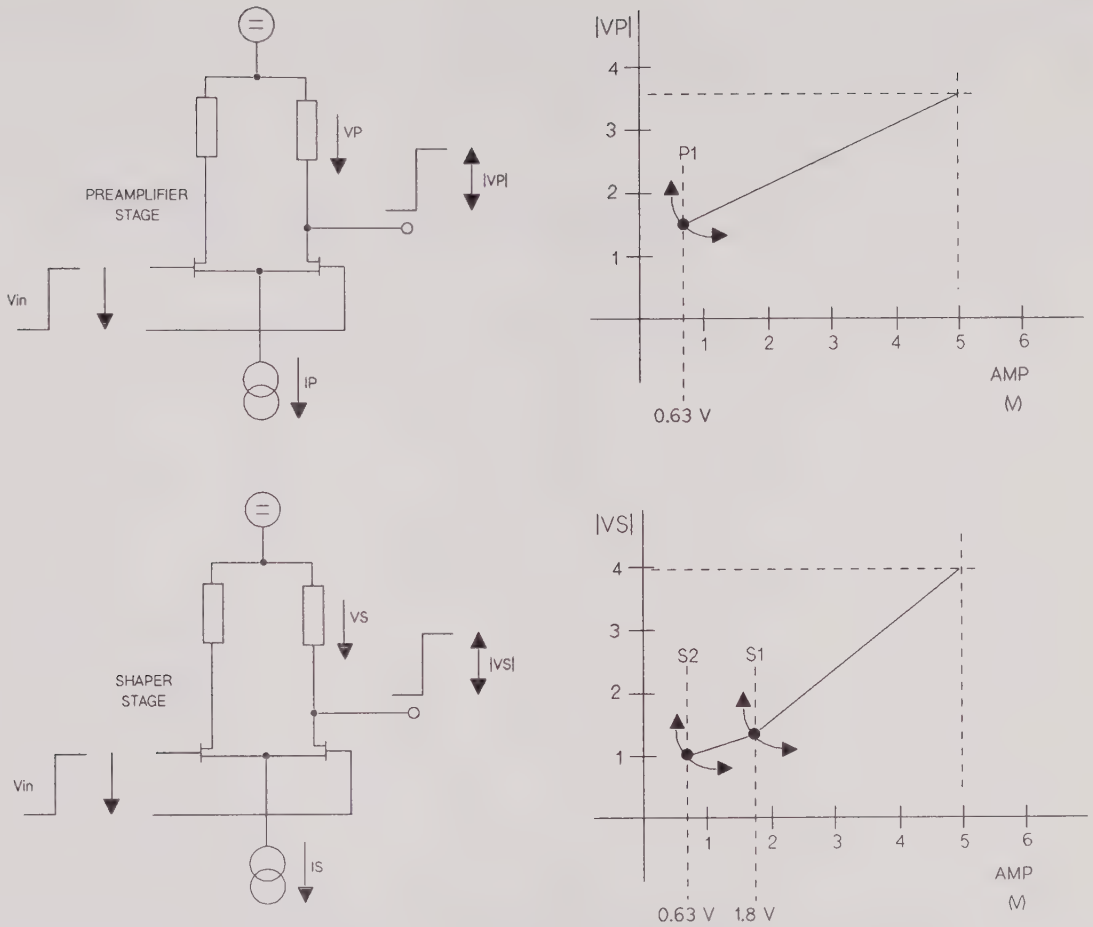

Figure 6-6-3. Preamplifier and Shaper Voltage Swings

To eliminate the influence of the on-chip resistors, a monitor resistor is biased with a reference current, (controlled by an operational amplifier) to obtain the desired voltage drop at the monitor resistor. This voltage drop and the programmed amplitude, control IP and IS.

During power-on the currents IP, IS, ID1, and ID2 are switched off until the difference between the most positive and most negative voltages of the hybrid (VD1 – VS1) is larger than 16 V (final value: 17 V). This is to avoid damage to the hybrid; during power-off the opposite is true.

Power-on forces the hybrid to stay in amplitude range 2 (time constant approximately10 ms) to avoid a HIL of −4.9 V and an AMP of 5 V due to random DAC data. After the 10 ms time constant the microprocessor is able to control the AMP-DAC and HIL-DAC.

High Level Control (HIL)

HIL is determined by controlling the voltage at the common node of the output resistors; for HIL > 0 V all IC U401 voltages must float with the output HIL.

Over voltage Protection

The outputs are protected against voltages which exceed the permitted window. The over voltages can be caused by external currents, external voltages or loads other than 50 Ω.

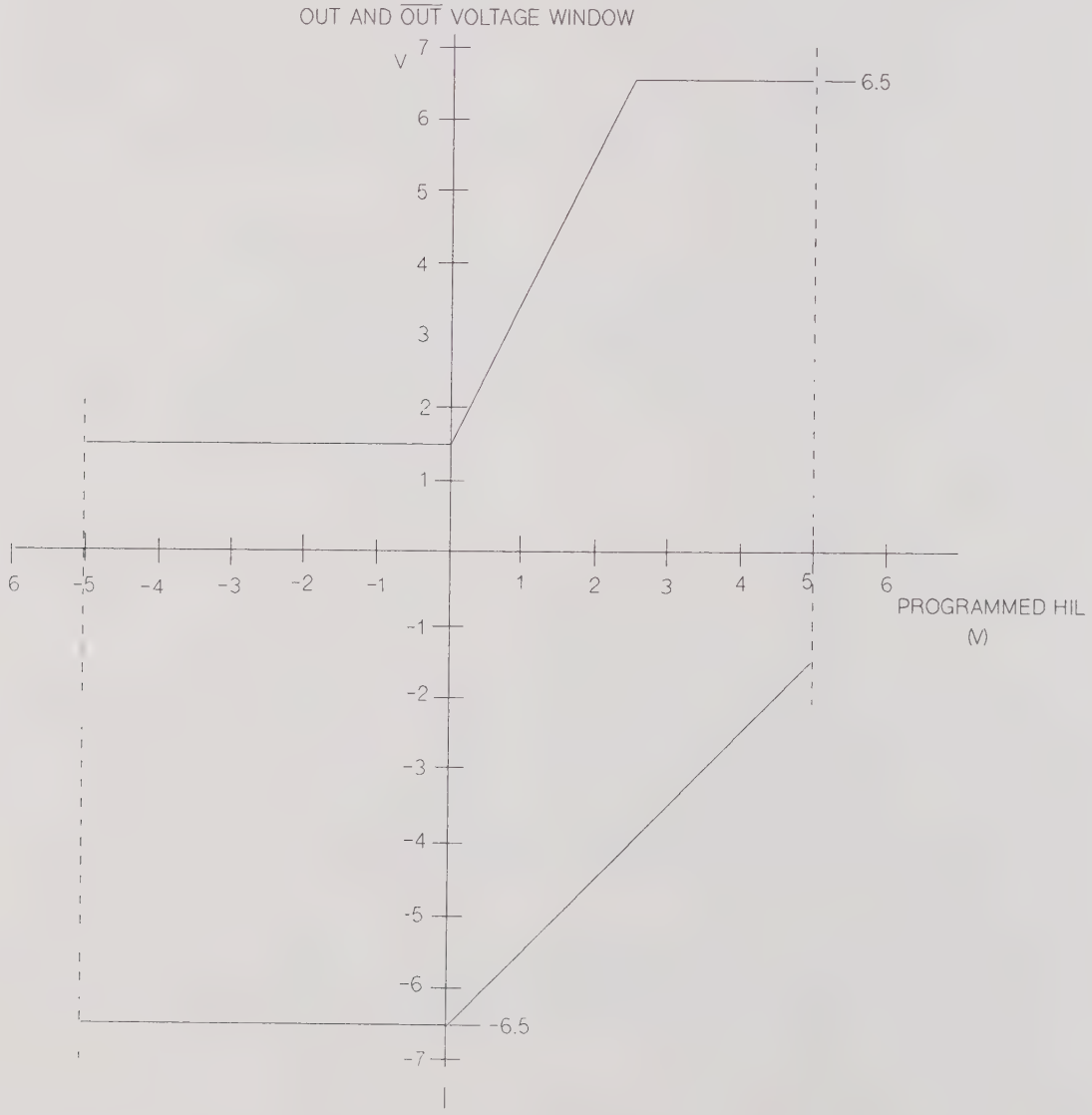

Figure 6-6-4. Over voltage Diagram

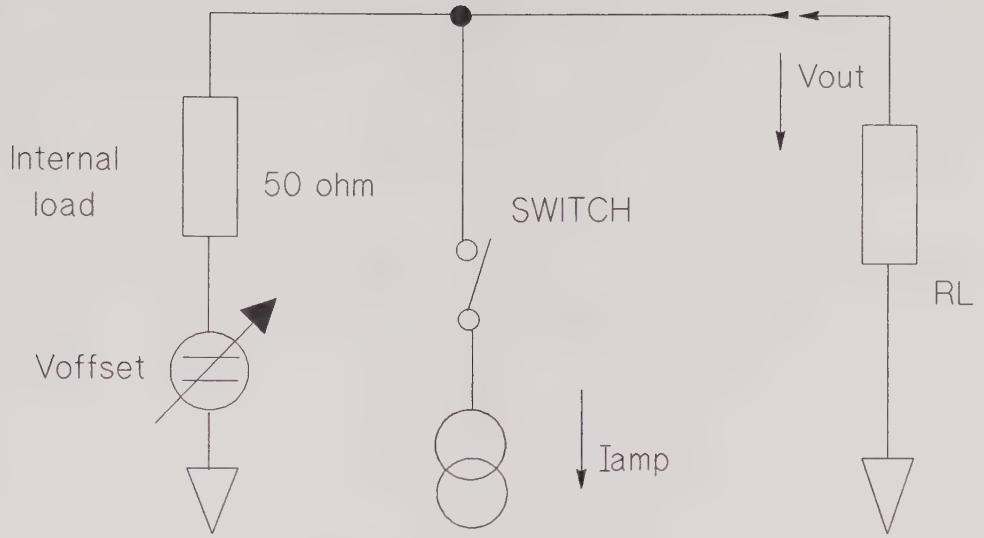

Figure 6-6-5. Load vs AMP/HIL

internal 50 Ω || RL = 50 Ω

IAMP = 4 mA – Vout = 100 mV

IAMP = 200 mA; Vout = 5 V at

Vout = (50 Ω || RL) x Iamp

HIL = (Voffset x RL) ÷ (50 Ω + RL)

LOL = HIL – Vout

The output peak detector disables the output if over voltage occurs. Over voltage detection will be suppressed during programming ENABLE (relay switch time). During reduction of the HIL the peak detectors will be discharged and again over voltage is suppressed.

Overshoot Adjust

The overshoot of the hybrid, is a function of amplitude, duty cycle, and differential offset of the shaper and driver stages. The effect of the amplitude is compensated for by reducing the voltage swings of the shaper and preamplifier with amplitude.

The effect of the duty cycle is compensated by controlling the differential offset at the driver stage vs duty cycle.

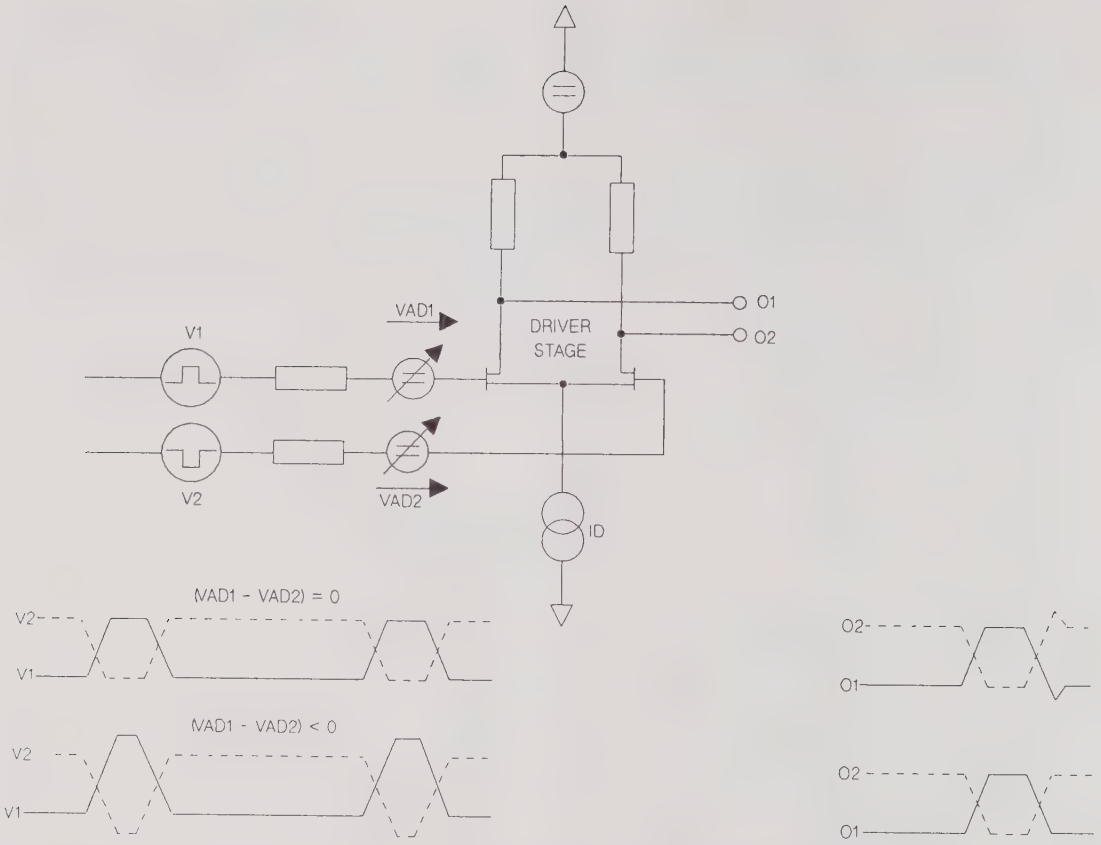

Figure 6-6-6. Duty Cycle Diagram

The differential offset of both driver and shaper stages has to be adjusted for small amplitudes.

Enable/Disable Switch

During power-on the hardware ensures the relays are disabled.

Before enable/disable is processed the microprocessor forces the output OFFSET to 0 V and the AMP to 0.1 V to ensure cold switching. After 20 ms (switch time) the old levels will be set. This level reduction occurs on both, the normal and complement output of the channel, even if only one relay enables/disables.

In the HPIB mode, the microprocessor waits for about 40 ms until a second relay has been energized. This is to reduce the current peaks caused by the switching on of two relays.

BLOCK DIAGRAM OUTPUT BOARD

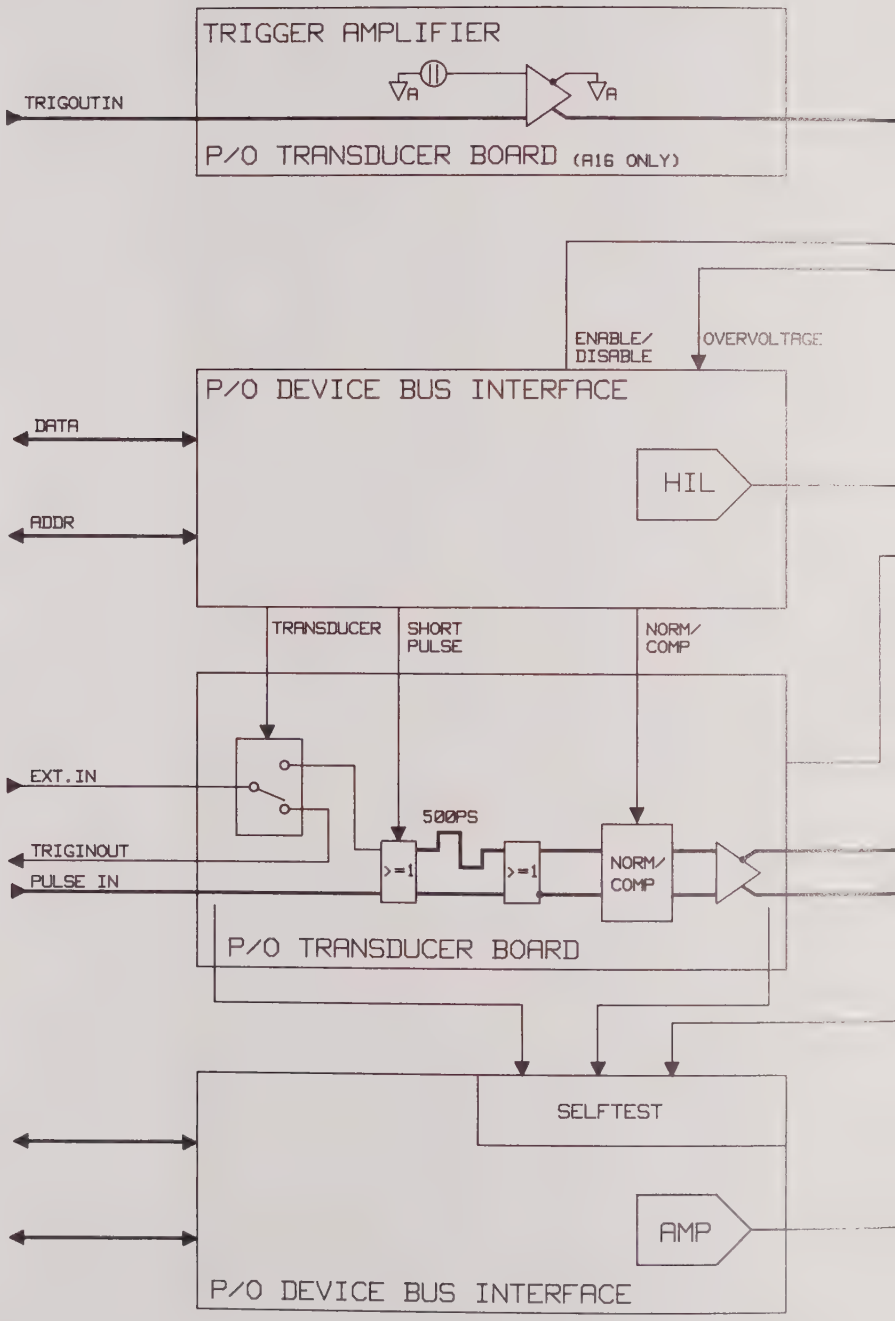

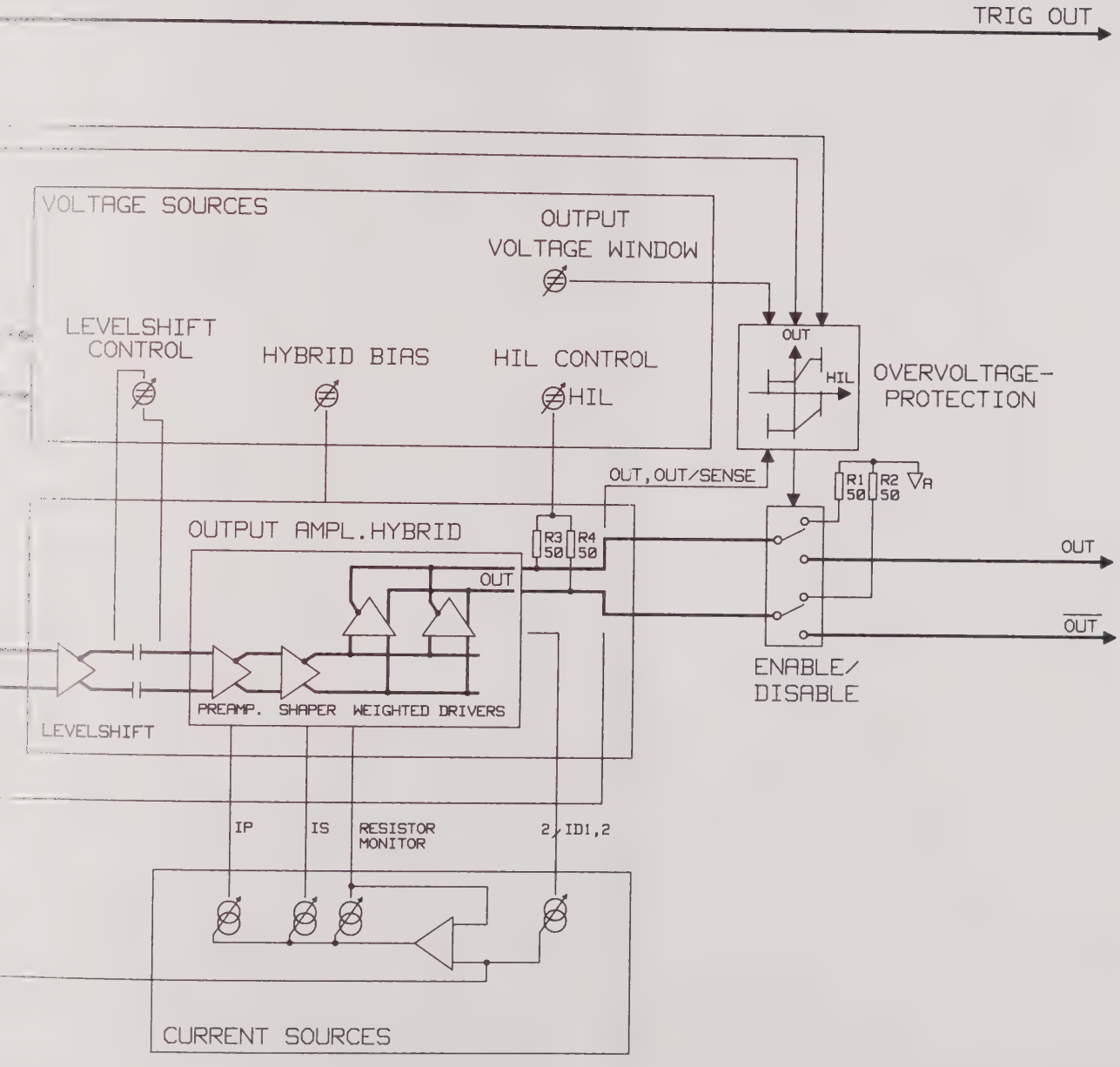

MODEL HP8131A
OUTPUT BOARD BLOCK DIAGRAM

FIGURE 6.6-7.

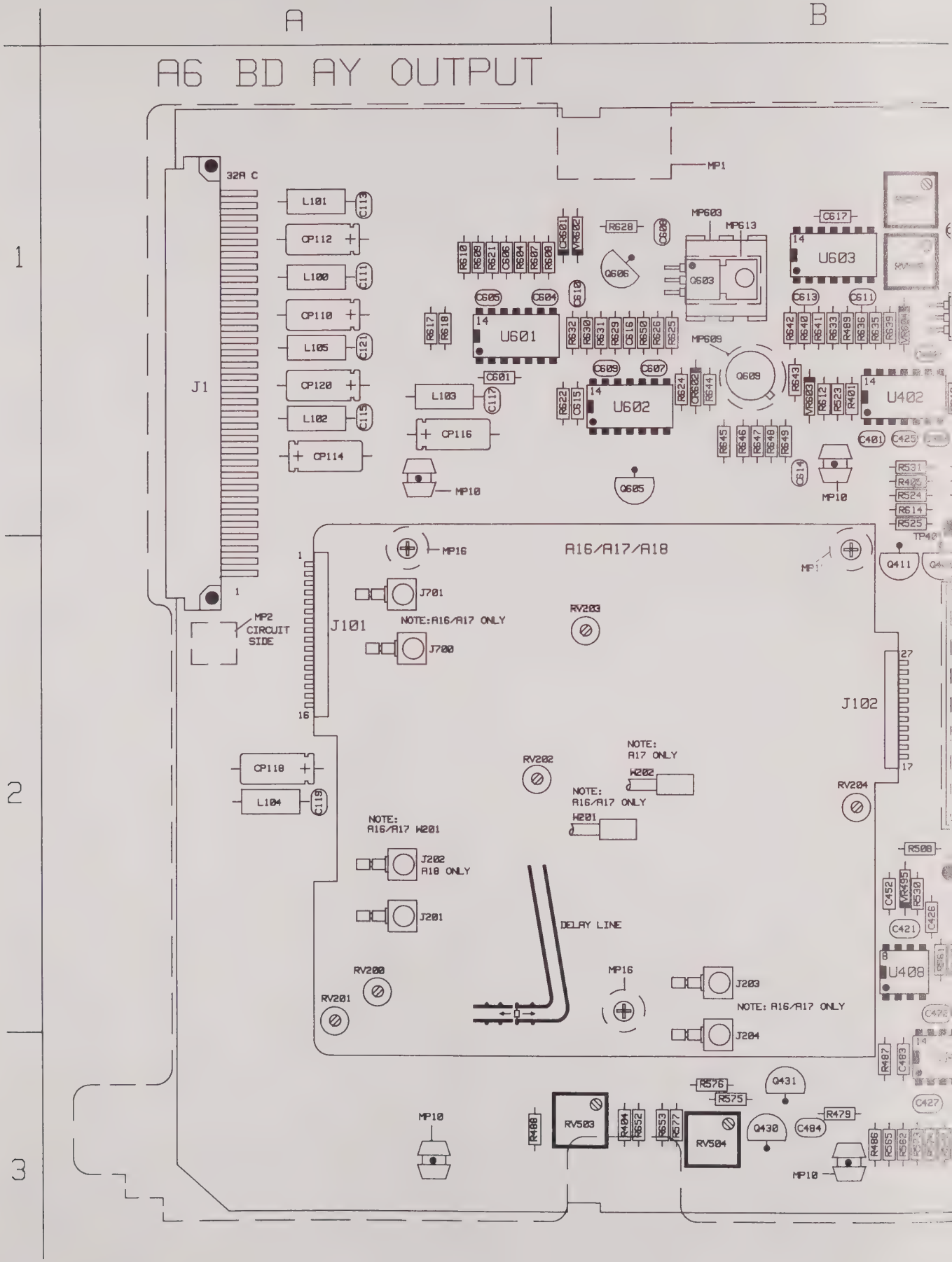
A
B
1
2
3
A6 BD AY OUTPUT
32A C
J1
L101
CP112
L100
CP110
L105
CP120
L102
CP114
L103
CP116
MP10
MP1
MP603
MP613
MP609
U601
U602
U603
U402
Q606
Q503
Q609
Q605
MP16
A16/A17/A18
J701
NOTE:A16/A17 ONLY
J700
J101
MP2
CIRCUIT
SIDE
RV203
J102
CP118
L104
RV202
NOTE:
A17 ONLY
W202
NOTE:
A16/A17 ONLY
W201
RV204
NOTE:
A16/A17 W201
J202
A18 ONLY
J201
DELAY LINE
RV200
RV201
MP16
J203
NOTE: A16/A17 ONLY
J204
U408
RV503
RV504
Q431
Q430
MP10

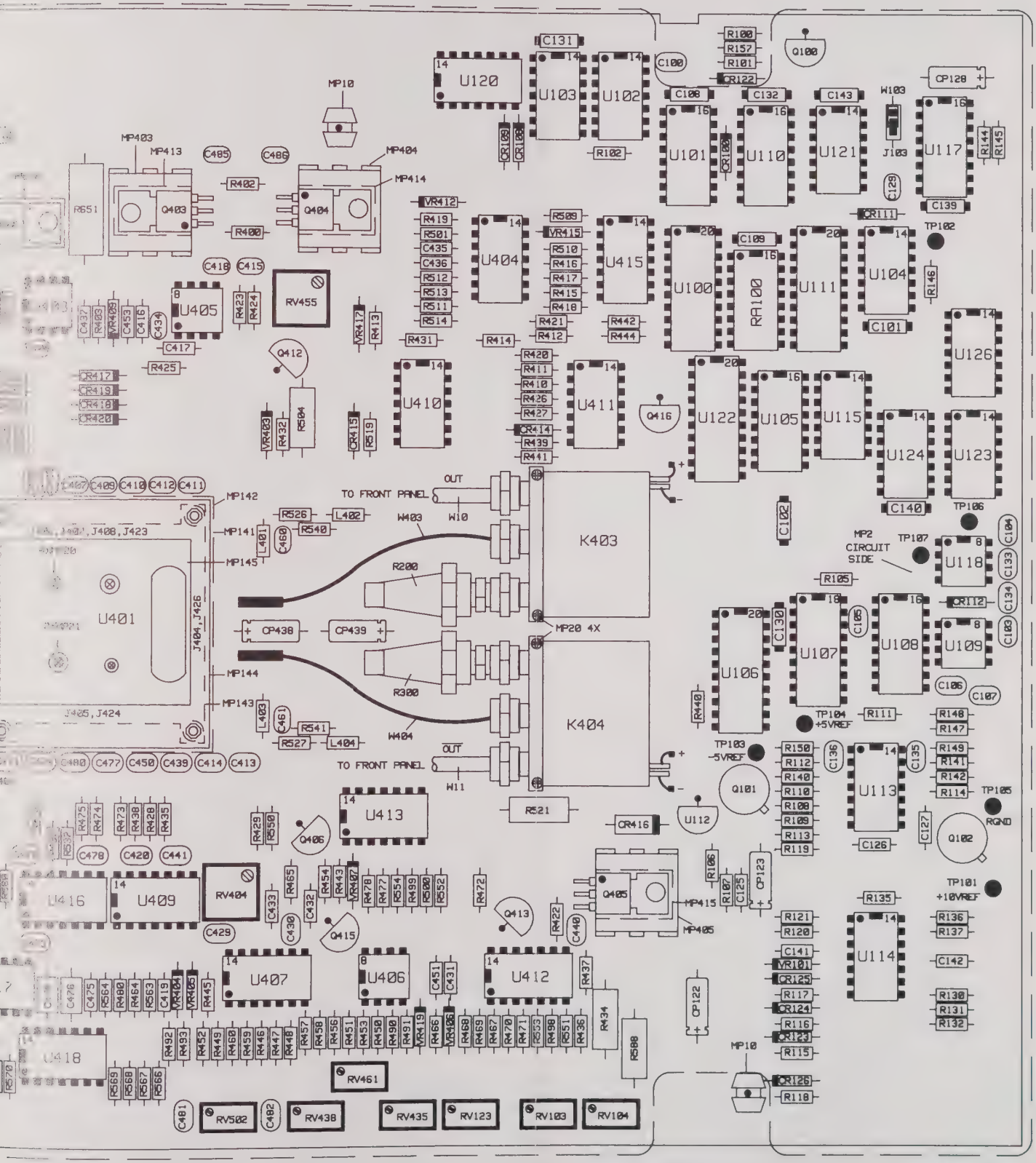

MODEL HP8131A
OUTPUT BD COMPONENT LAYOUT

FIGURE 6.6-8.

REF. DES.	GRID LOC.	REF. DES.	GRID LOC.	REF. DES.	GRI LOC
C100	D1	C426	B2	CP110	A1
C101	D1	C427	B3	CP112	A1
C102	D2	C429	C2	CP114	A1
C103	D2	C430	C2	CP116	A1
C104	D2	C431	C3	CP118	A2
C105	D2	C432	C2	CP120	A1
C106	D2	C433	C2	CP122	A1
C107	D2	C434	C1	CP123	A1
C108	D1	C435	C1	CP128	A1
C109	D1	C436	C1	CP438	A1
				CP439	A1
C111	A1	C437	B1		
C113	A1	C439	C2	CR100	A1
C115	A1	C440	C2	CR108	A1
C117	A1	C441	C2	CR109	A1
C119	A2	C450	C2	CR111	A1
				CR112	A1
C121	A1	C451	C3		
C125	D2	C452	B2	CR122	A1
C126	D2	C453	B1	CR123	A1
C127	D2	C460	C2	CR124	A1
C129	D1	C461	C2	CR125	A1
				CR126	A1
C130	D2	C470	B2		
C131	C1	C471	B2	CR414	A1
C132	D1	C472	B2	CR415	A1
C133	D2	C473	B2	CR416	A1
C134	D2	C474	B2	CR417	A1
				CR418	A1
C135	D2	C475	B3		
C136	D2	C476	B3	CR419	A1
C139	D1	C477	B2	CR420	A1
C140	D2	C478	B2	CR601	A1
C141	D2	C479	B3	CR602	A1
C142	D3	C480	B2	J1	
C143	D1	C481	C3	J101	
C401	B1	C482	C3	J102	
C402	B1	C483	B3	J103	
C403	B1	C484	B3	J403	
C404	B1	C485	C1	J404	
C405	B2	C486	C1	J405	
C407	B2	C601	A1	J406	
C409	B2	C604	A1	J407	
C410	B2	C605	A1	J408	
C411	C2	C606	A1	J423	C2
C412	C2	C607	B1	J424	B2
C413	C2	C608	B1	J425	B2
C414	C2	C609	B1	J426	C1
C415	C1	C610	B1		
				K403	
C416	C1	C611	B1	K404	
C417	C1	C613	B1		
C418	C1	C614	B1	L100	A1
C419	C3	C615	B1	L101	A1
C420	B/C2	C616	B1	L102	A1
				L103	A1
C421	B2	C617	B1	L104	A2
C422	B2	C618	B1	L105	A1
C425	B1			L401	C2

REF. DES.	GRID LOC.	REF. DES.	GRID LOC.	REF. DES.	GRID LOC.	REF. DES.	GRID LOC.	REF. DES.	GRID LOC.	REF. DES.	GRID LOC.	REF. DES.	GRID LOC.
L402	C2	R111	D2	R424	C1	R486	B3	R574	B3	RV500	B1	U417	B3
L403	C2	R112	D2	R425	C1	R487	B3	R575	B3	RV501	B1	U418	B3
L404	C2	R113	D2	R426	C1	R488	A3	R576	B3	RV502	C3	U601	A1
MP1	B1	R114	D2	R427	C1	R489	B1	R577	B3	RV503	B3	U602	B1
MP2	A2	R115	D3	R428	C2	R490	C3	R588	C3	RV504	B3	U603	B1
MP10	A1	R116	D3	R429	C2	R491	C3	R604	A1	TP101	D2	VR101	D3
MP16	A2	R117	D3	R430	B2	R492	C3	R607	A1	TP102	D1	VR403	C1
MP20	C2	R118	D3	R431	C1	R493	C3	R608	A1	TP103	D2	VR404	C3
MP21	B2	R119	D2	R432	C1	R494	B1	R609	A1	TP104	D2	VR405	C3
MP141	C2	R120	D2	R434	C3	R498	C3	R610	A1	TP105	D2	VR406	C3
MP142	C2	R121	D2	R435	C2	R499	C2	R612	B1	TP106	D2	VR407	C2
MP143	C2	R130	D3	R436	C3	R500	C2	R613	B1	TP107	D2	VR409	B1
MP144	C2	R131	D3	R437	C3	R501	C1	R614	B1	TP403	B2	VR412	C1
MP145	C2	R132	D3	R438	B2	R504	C1	R615	B1	TP404	B1	VR415	C1
MP403	C1	R135	D2	R439	C1	R508	B2	R617	A1	U100	D1	VR417	C1
MP404	C1	R136	D2	R440	D2	R509	C1	R618	A1	U101	D1	VR419	C3
MP405	D2	R137	D2	R441	C2	R510	C1	R621	A1	U102	C1	VR495	B2
MP413	C1	R140	D2	R442	C1	R511	C1	R622	B1	U103	C1	VR602	B1
MP414	C1	R141	D2	R443	C2	R512	C1	R624	B1	U104	D1	VR603	B1
MP415	D2	R142	D2	R444	C1	R513	C1	R625	B1	U105	D1	VR604	B1
MP603	B1	R144	D1	R445	C3	R514	C1	R626	B1	U106	D2	W103	D1
MP609	B1	R145	D1	R446	C3	R519	C1	R628	B1	U107	D2	W403	C2
MP613	B1	R146	D1	R447	C3	R520	B1	R629	B1	U108	D2	W404	C2
MP618	B1	R147	D2	R448	C3	R521	C2	R630	B1	U109	D2		
Q100	D1	R148	D2	R449	C3	R523	B1	R631	B1	U110	D1		
Q101	D2	R149	D2	R450	C3	R524	B1	R632	B1	U111	D1		
Q102	D2	R150	D2	R451	C3	R525	B1	R633	B1	U112	D2		
Q401	B2	R157	D1	R452	C3	R526	C2	R635	B1	U113	D2		
Q403	C1	R200	C2	R453	C3	R527	C2	R636	B1	U114	D2		
Q404	C1	R300	C2	R454	C2	R530	B2	R639	B1	U115	D1		
Q405	C2	R400	C1	R456	C3	R531	B1	R640	B1	U117	D1		
Q406	C2	R401	B1	R457	C3	R532	B2	R641	B1	U118	D2		
Q411	B2	R402	C1	R458	C3	R540	C2	R642	B1	U120	C1		
Q412	C1	R403	B1	R459	C3	R541	C2	R643	B1	U121	D1		
Q413	C2	R404	B3	R460	C3	R550	C2	R644	B1	U122	D1		
Q415	C2	R405	B1	R464	B3	R551	C3	R645	B1	U123	D1		
Q416	D1	R406	B1	R465	C2	R552	C2	R646	B1	U124	D1		
Q430	B3	R407	B1	R466	C3	R553	C3	R647	B1	U126	D1		
Q431	B3	R408	B1	R467	C3	R554	C2	R648	B1	U401	B2		
Q603	B1	R410	C1	R468	C3	R560	B2	R649	B1	U402	B1		
Q605	B1	R411	C1	R469	C3	R561	B2	R650	B1	U403	B1		
Q606	B1	R412	C1	R470	C3	R562	B3	R651	B1	U404	C1		
Q608	B1	R413	C1	R471	C3	R563	C3	R652	B3	U405	C1		
Q609	B1	R414	C1	R472	C2	R564	B3	R653	B3	U406	C3		
R100	D1	R415	C1	R473	B2	R565	B3	RA100	D1	U407	C3		
R101	D1	R416	C1	R474	B2	R566	C3			U408	B2		
R102	C1	R417	C1	R475	B2	R567	C3	RV103	C3	U409	C2		
R105	D2	R418	C1	R476	B2	R568	B3	RV104	C3	U410	C1		
R106	D2	R419	C1	R477	C2	R569	B3	RV123	C3	U411	C1		
R107	D2	R420	C1	R478	C2	R570	B3	RV404	C2				
R108	D2	R421	C1	R479	B3	R571	B3	RV435	C3	U412	C3		
R109	D2	R422	C2	R480	B3	R572	B3	RV438	C3	U413	C2		
R110	D2	R423	C1	R484	B2	R573	B3	RV455	C1	U415	C1		
								RV461	C3	U416	B2		

MODEL HP8131A
OUTPUT BOARD COMPONENT
OUTPUT BD (A26 OPT.020-A27/A28)

FIGURE 6.6-9.

A16 BD AY TRANSDUCER

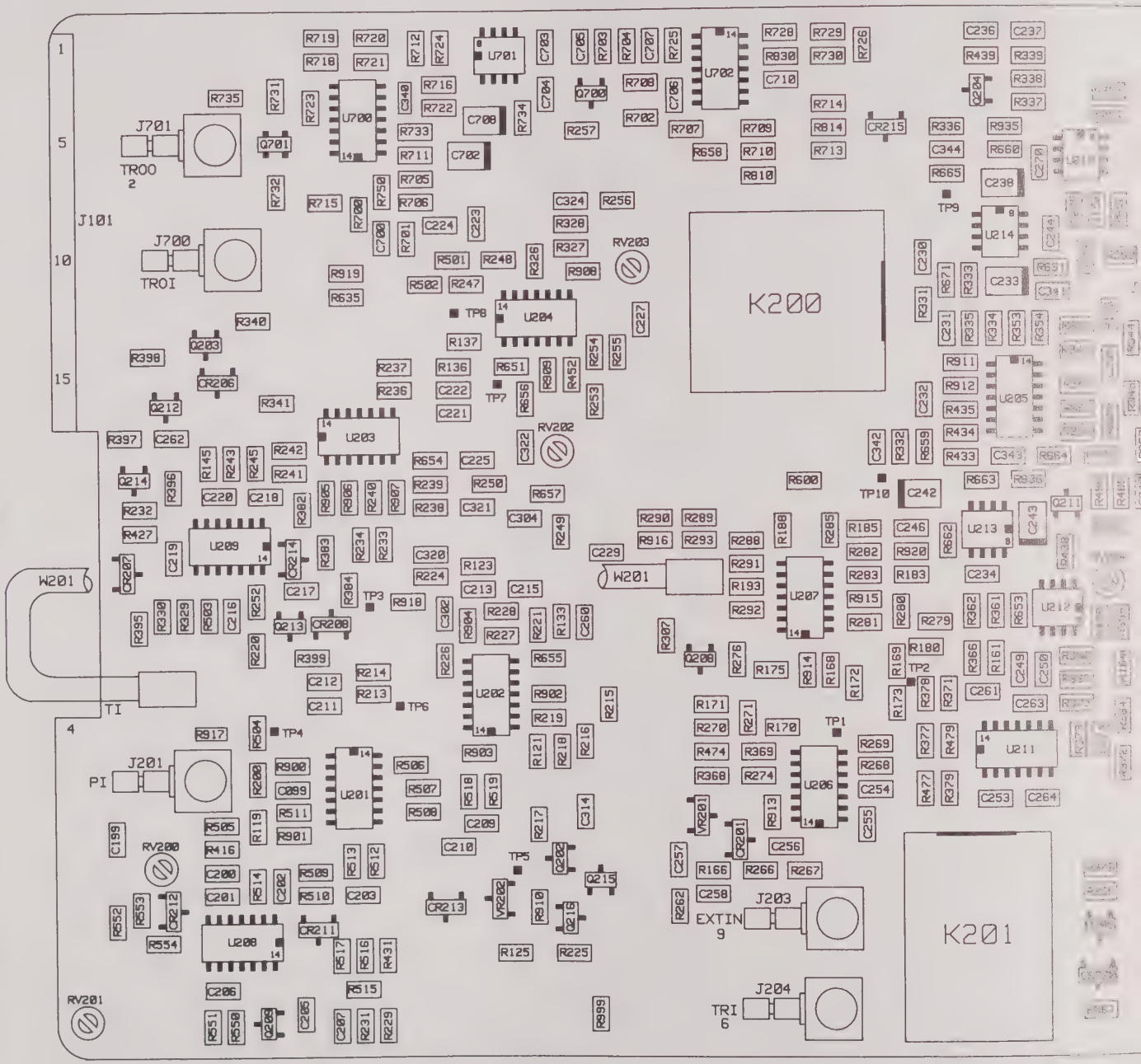

REF. DES.	GRID LOC.	REF. DES.	GRID LOC.	REF. DES.	GRID LOC.	REF. DES.	GRID LOC.	REF. DES.	GRID LOC.	REF. DES.	GRID LOC.	REF. DES.	GRID LOC.	REF. DES.	GRID LOC.
C199	A2	C263	C2	Q215	B3	R239	A/B2	R339	C1	R489	C2	R707	B1	R936	C2
C199	A2	C264	C2	Q216	B3	R240	A2	R340	A1	R490	C2	R708	B1	R999	B3
C200	A3	C270	C1	Q700	B1	R241	A2	R341	A1	R501	B1	R709	B1		
C201	A3	C302	B2	Q701	A1	R242	A2	R344	C1	R502	A1	R710	B1	RV200	A2
C202	A3	C304	B2			R243	A2	R345	C1/2	R503	A2	R711	A1/2	RV201	A3
				R119	A2									RV202	B2
C203	A3	C314	B2	R121	B2	R245	A2	R346	C1	R504	A2	R712	A1	RV203	B1
C205	A3	C320	B2	R123	B2	R247	B1	R347	C1	R505	A2	R713	B1	RV204	C2
C206	A3	C321	B2	R125	B3	R248	B1	R350	C1	R506	A2	R714	B1		
C207	A3	C322	B2	R128	C1	R249	B2	R353	C1	R507	A/B2	R715	A1	TP1	B2
C209	B2	C324	B1			R250	B2	R354	C1	R508	A/B2	R716	B1	TP2	C2
				R133	B2									TP3	A2
C210	B2	C340	A1	R136	B1	R251	C1	R355	C1	R509	A3	R718	A1	TP4	A2
C211	A2	C341	C1	R137	B1	R252	A2	R357	C2	R510	A3	R719	A1	TP5	B3
C212	A2	C342	B2	R145	A2	R253	B1/2	R358	C2	R511	A2	R720	A1		
C213	B2	C343	C2	R150	C1	R254	B1	R359	C2	R512	A2/3	R721	A1	TP6	A2
C215	B2	C344	C1			R255	B1	R360	C2	R513	A2/3	R722	B1	TP7	B1
				R152	C1									TP8	B1
C216	A2	C700	A1	R161	C2	R256	B1	R361	C2	R514	A3	R723	A1	TP9	C1
C217	A2	C702	B1	R164	C2	R257	B1	R362	C2	R515	A3	R724	B1	TP10	C2
C218	A2	C703	B1	R166	B3	R259	C3	R364	C2	R516	A3	R725	B1		
C219	A2	C704	B1	R168	B2	R262	C3	R365	C2	R517	A3	R726	B1	U201	A2
C220	A2	C705	B1			R266	B3	R366	C2	R518	B2	R728	B1	U202	B2
				R169	B2									U203	A2
C221	B2	C706	B1	R170	B2	R267	B3	R367	C3	R519	B2	R729	B1	U204	B1
C222	B1	C707	B1	R171	B2	R268	B2	R368	B2	R550	A3	R730	B1	U205	C1/2
C223	B1	C708	B1	R172	B2	R269	B2	R369	B2	R551	A3	R731	A1		
C224	B1	C710	B1	R173	B2	R270	B2	R370	C3	R552	A3	R732	A1	U206	B2
C225	B2					R271	B2	R371	C2	R553	A3	R733	A1/2	U207	B2
		CR200	C3	R175	B2									U208	A3
C227	B1	CR201	B2	R180	B/C2	R274	B2	R372	C2	R554	A3	R734	B1	U209	A2
C228	B2	CR206	A1	R183	B/C2	R276	B2	R373	C2	R600	B2	R735	A1	U210	C1
C230	C1	CR207	A2	R185	B2	R279	C2	R374	C2	R635	A1	R750	A1		
C231	C1	CR208	A2	R188	B2	R280	B2	R375	C2	R639	C2	R810	B1	U211	C2
C232	C1/2					R281	B2	R377	C2	R651	B1	R814	B1	U212	C2
		CR211	A3	R193	B2									U213	C2
C233	C1	CR212	A3	R200	A2	R282	B2	R378	C2	R652	C1	R830	B1	U214	C1
C234	C2	CR213	B3	R213	A2	R283	B2	R379	C2	R653	C2	R900	A2	U700	A1
C235	C1	CR214	A2	R214	A2	R285	B2	R382	A2	R654	A/B2	R901	A2		
C236	C1	CR215	B1	R215	B2	R288	B2	R383	A2	R656	B1/2	R902	B2	U701	B1
C237	C1					R289	B2	R384	A2	R657	B2	R903	B2	U702	B1
		J101	A1	R216	B2										
C238	C1	J102	C1/2	R217	B2	R290	B2	R395	A2	R658	B1	R904	B2	VR201	B2
C239	C1	J201	A2	R218	B2	R291	B2	R396	A2	R659	C2	R905	A2	VR202	B3
C240	C2	J203	B3	R219	B2	R292	B2	R397	A2	R660	C1	R906	A2		
C242	C2	J204	B3	R220	A2	R293	B2	R398	A1	R661	C1	R907	A2	W201	A/B2
C243	C2	J700	A1			R307	B2	R399	A2	R662	C2	R908	B1		
		J701	A1	R221	B2										
C244	C1			R224	A/B2	R326	B1	R416	A2	R663	C2	R909	B1		
C246	B/C2	K200	B2	R225	B3	R327	B1	R427	A2	R664	C2	R910	B3		
C249	C2	K201	B2	R226	B2	R328	B1	R431	A3	R665	C1	R911	C1		
C250	C2			R227	B2	R329	A2	R433	C2	R666	C1	R912	C1		
C253	C2	Q202	B2/3			R330	A2	R434	C2	R667	C2	R913	B2		
		Q203	A1	R228	B2										
C254	B2	Q204	C1	R229	A3	R331	C1	R435	C2	R671	C1	R914	B2		
C255	B2	Q205	C3	R231	A3	R332	B2	R436	C2	R700	A1	R915	B2		
C256	B2	Q208	B2	R232	A2	R333	C1	R437	C2	R701	A1	R916	B2		
C257	B2/3			R233	A2	R334	C1	R438	C2	R702	B1	R917	A2		
C258	B3	Q209	A3			R335	C1	R439	C1	R703	B1	R918	A2		
		Q211	C2	R234	A2										
C260	B2	Q212	A2	R236	A1	R336	C1	R452	B1	R704	B1	R919	A1		
C261	C2	Q213	A2	R237	A1	R337	C1	R459	C2	R705	A1/2	R920	C2		
C262	A2	Q214	B2	R238	A/B2	R338	C1	R474	B2	R706	A1/2	R935	C1		
								R477	C2						
								R479	C2						

MODEL HP8131A FIGURE 6.6-10.
STANDARD TRANSDUCER BOARD

OUTPUT BD (A26 OPT.020-A27/A28) 6.6-15

A17 BD AY TRANSDUCER CHAN1(OPT.020)

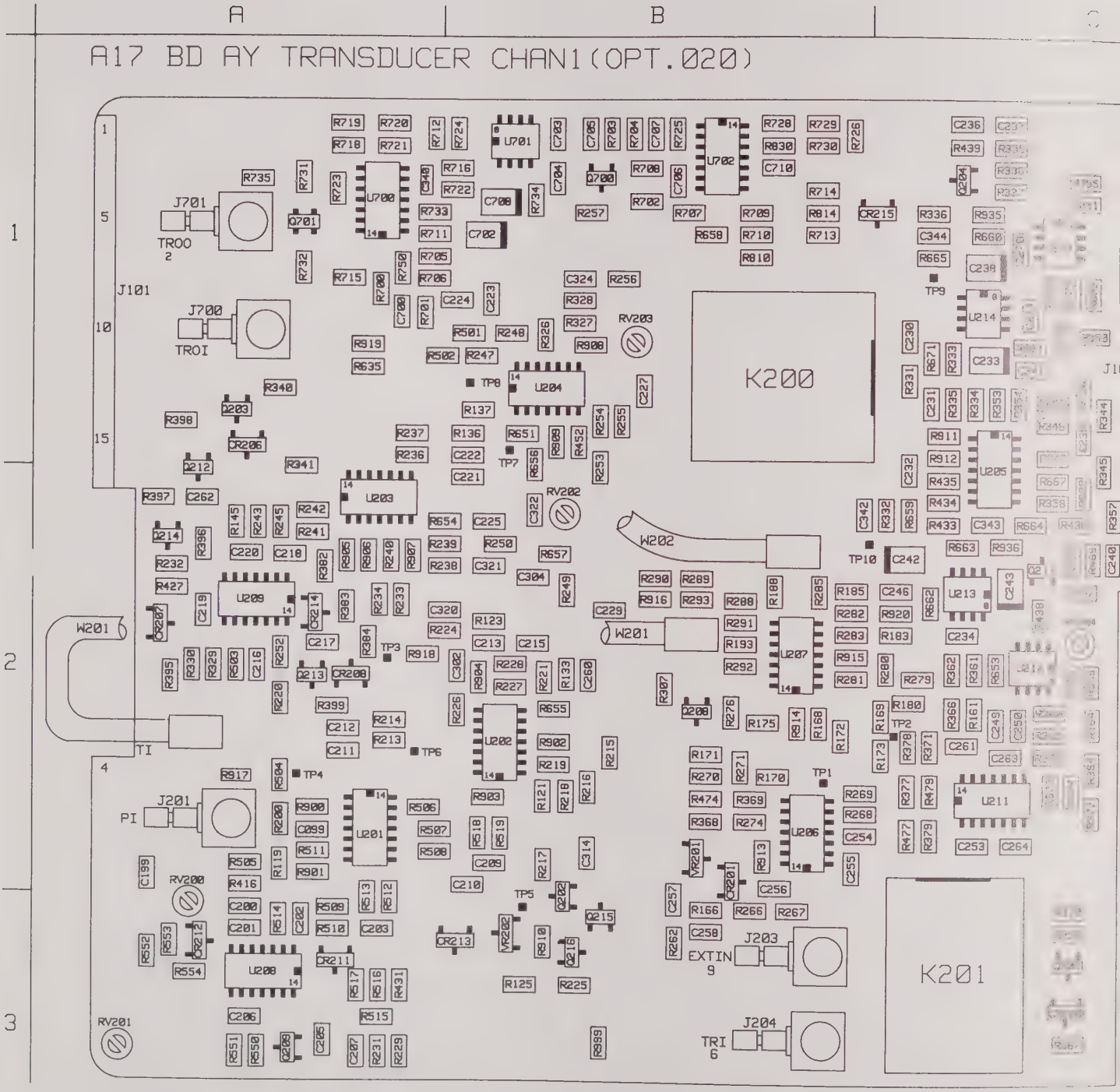

REF. DES.	GRID LOC.	REF. DES.	GRID LOC.	REF. DES.	GRID LOC.	REF. DES.	GRID LOC.	REF. DES.	GRID LOC.	REF. DES.	GRID LOC.	REF. DES.	GRID LOC.	REF. DES.	GRID LOC.
C099	A2	C263	C2	Q215	B3	R239	A/B2	R339	C1	R489	C2	R707	B1	R936	C2
C199	A2	C264	C2	Q216	B3	R240	A2	R340	A1	R490	C2	R708	B1	R999	B3
C200	A3	C270	C1	Q700	B1	R241	A2	R341	A1	R501	B1	R709	B1		
C201	A3	C302	B2	Q701	A1	R242	A2	R344	C1	R502	A1	R710	B1	RV200	A2
C202	A3	C304	B2			R243	A2	R345	C1/2	R503	A2	R711	A1/2	RV201	A3
				R119	A2									RV202	B2
C203	A3	C314	B2	R121	B2	R245	A2	R346	C1	R504	A2	R712	A1	RV203	B1
C205	A3	C320	B2	R123	B2	R247	B1	R347	C1	R505	A2	R713	B1	RV204	C2
C206	A3	C321	B2	R125	B3	R248	B1	R350	C1	R506	A2	R714	B1		
C207	A3	C322	B2	R128	C1	R249	B2	R353	C1	R507	A/B2	R715	A1	TP1	B2
C209	B2	C324	B1			R250	B2	R354	C1	R508	A/B2	R716	B1	TP2	C2
				R133	B2			R355	C1					TP3	A2
C210	B2	C340	A1	R136	B1	R251	C1	R357	C2	R509	A3	R718	A1	TP4	A2
C211	A2	C341	C1	R137	B1	R252	A2	R358	C2	R510	A3	R719	A1	TP5	B3
C212	A2	C342	B2	R145	A2	R253	B1/2	R359	C2	R511	A2	R720	A1		
C213	B2	C343	C2	R150	C1	R254	B1	R360	C2	R512	A2/3	R721	A1	TP6	A2
C215	B2	C344	C1			R255	B1			R513	A2/3	R722	B1	TP7	B1
				R152	C1			R361	C2					TP8	B1
C216	A2	C700	A1	R161	C2	R256	B1	R362	C2	R514	A3	R723	A1	TP9	C1
C217	A2	C702	B1	R164	C2	R257	B1	R364	C2	R515	A3	R724	B1	TP10	C2
C218	A2	C703	B1	R166	B3	R259	C3	R365	C2	R516	A3	R725	B1		
C219	A2	C704	B1	R168	B2	R262	C3	R366	C2	R517	A3	R726	B1	U201	A2
C220	A2	C705	B1			R266	B3			R518	B2	R728	B1	U202	B2
				R169	B2			R367	C3					U203	A2
C221	B2	C706	B1	R170	B2	R267	B3	R368	B2	R519	B2	R729	B1	U204	B1
C222	B1	C707	B1	R171	B2	R268	B2	R369	B2	R550	A3	R730	B1	U205	C1/2
C223	B1	C708	B1	R172	B2	R269	B2	R370	C3	R551	A3	R731	A1		
C224	B1	C710	B1	R173	B2	R270	B2	R371	C2	R552	A3	R732	A1	U206	B2
C225	B2					R271	B2			R553	A3	R733	A1/2	U207	B2
		CR200	C3	R175	B2			R372	C2					U208	A3
C227	B1	CR201	B2	R180	B/C2	R274	B2	R373	C2	R554	A3	R734	B1	U209	A2
C229	B2	CR206	A1	R183	B/C2	R276	B2	R374	C2	R635	A1	R735	A1	U210	C1
C230	C1	CR207	A2	R185	B2	R279	C2	R375	C2	R639	C2	R750	A1		
C231	C1	CR208	A2	R188	B2	R280	B2	R377	C2	R651	B1	R810	B1	U211	C2
C232	C1/2					R281	B2			R652	C1	R814	B1	U212	C2
		CR211	A3	R193	B2			R378	C2					U213	C2
C233	C1	CR212	A3	R200	A2	R282	B2	R379	C2			R830	B1	U214	C1
C234	C2	CR213	B3	R213	A2	R283	B2	R382	A2	R653	C2	R900	A2	U700	A1
C235	C1	CR214	A2	R214	A2	R285	B2	R383	A2	R654	A/B2	R901	A2		
C236	C1	CR215	B1	R215	B2	R288	B2	R384	A2	R656	B1/2	R902	B2	U701	B1
C237	C1					R289	B2			R657	B2	R903	B2	U702	B1
		J101	A1	R216	B2			R395	A2	R658	B1				
C238	C1	J102	C1/2	R217	B2	R290	B2	R396	A2			R904	B2	VR201	B2
C239	C1	J201	A2	R218	B2	R291	B2	R397	A2	R659	C2	R905	A2	VR202	B3
C240	C2	J203	B3	R219	B2	R292	B2	R398	A1	R660	C1	R906	A2		
C242	C2	J204	B3	R220	A2	R293	B2	R399	A2	R661	C1	R907	A2	W201	A/B2
C243	C2	J700	A1			R307	B2			R662	C2	R908	B1	W202	B2
		J701	A1	R221	B2			R416	A2	R663	C2				
C244	C1			R224	A/B2	R326	B1	R427	A2			R909	B1		
C246	B/C2	K200	B2	R225	B3	R327	B1	R431	A3	R664	C2	R910	B3		
C249	C2	K201	B2	R226	B2	R328	B1	R433	C2	R665	C1	R911	C1		
C250	C2			R227	B2	R329	A2	R434	C2	R666	C1	R912	C1		
C253	C2	Q202	B2/3			R330	A2			R667	C2	R913	B2		
		Q203	A1	R228	B2			R435	C2	R671	C1				
C254	B2	Q204	C1	R229	A3	R331	C1	R436	C2			R914	B2		
C255	B2	Q205	C3	R231	A3	R332	B2	R437	C2	R700	A1	R915	B2		
C256	B2	Q208	B2	R232	A2	R333	C1	R438	C2	R701	A1	R916	B2		
C257	B2/3			R233	A2	R334	C1	R439	C1	R702	B1	R917	A2		
C258	B3	Q209	A3			R335	C1			R703	B1	R918	A2		
		Q211	C2	R234	A2			R452	B1	R704	B1				
C260	B2	Q212	A2	R236	A1	R336	C1	R459	C2			R919	A1		
C261	C2	Q213	A2	R237	A1	R337	C1	R474	B2			R920	C2		
C262	A2	Q214	B2	R238	A/B2	R338	C1	R477	C2	R705	A1/2	R935	C1		
								R479	C2	R706	A1/2				

MODEL HP8131A FIGURE 6.6-11.

OPT.CHANNEL 1 TRANSDUCER BD COMPONENT LAYOUT

OUTPUT BD (A26 OPT.020-A27/A28)

A18 BD AY TRANSDUCER CHAN2(OPT.

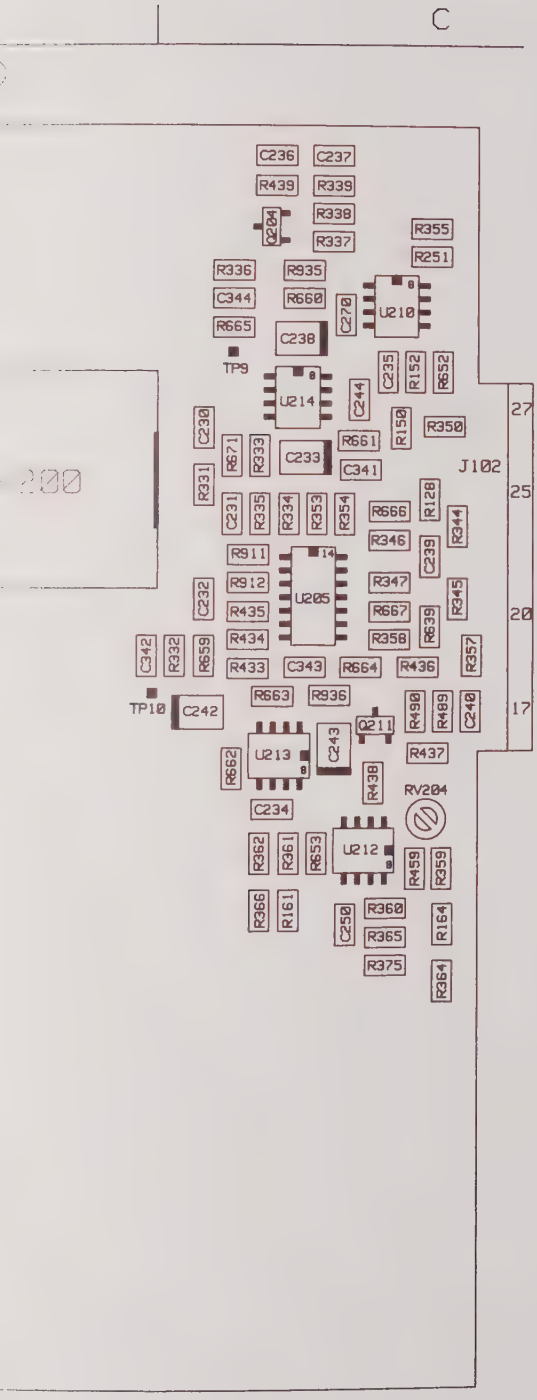

REF. DES.	GRID LOC.	REF. DES.	GRID LOC.	REF. DES.	GRID LOC.	REF. DES.	GRID LOC.	REF. DES.	GRID LOC.
C099	A2	C343	C2	R229	A3	R364	C2	R654	A/B2
C199	A2	C344	C1	R231	A3	R365	C2	R656	B1/2
C200	A3			R232	A2	R366	C2	R657	B2
C201	A3	CR200	C3	R233	A2	R367	C3	R659	C2
C202	A3	CR201	B2	R234	A2	R375	C2	R660	C1
		CR206	A1						
C203	A3	CR207	A2	R236	A1	R382	A2	R661	C1
C205	A3	CR208	A2	R237	A1	R383	A2	R662	C2
C206	A3			R238	A/B2	R384	A2	R663	C2
C207	A3	CR211	A3	R239	A/B2	R395	A2	R664	C2
C209	B2	CR212	A3	R240	A2	R396	A2	R665	C1
		CR213	B3						
C210	B2	CR214	A2	R241	A2	R397	A2	R666	C1
C211	A2			R242	A2	R398	A1	R667	C2
C212	A2	J101	A1	R243	A2	R399	A2	R671	C1
C213	B2	J102	C1/2	R245	A2	R416	A2	R711	A1/2
C215	B2	J201	A2	R247	B1	R427	A2	R733	A1/2
		K200	B2	R248	B1			R900	A2
C216	A2			R249	B2	R431	A3	R901	A2
C217	A2	Q202	B2/3	R250	B2	R433	C2	R902	B2
C218	A2	Q203	A1	R251	C1	R434	C2	R903	B2
C219	A2	Q204	C1	R252	A2	R435	C2	R904	B2
C220	A2	Q209	A3			R436	C2		
		Q211	C2	R253	B1/2			R905	A2
C221	B2			R254	B1	R437	C2	R906	A2
C222	B1	Q212	A2	R255	B1	R438	C2	R907	A2
C223	B1	Q213	A2	R256	B1	R439	C1	R908	B1
C224	B1	Q214	B2	R267	B3	R452	B1	R909	B1
C225	B2	Q215	B3			R459	C2		
		Q216	B3	R326	B1			R910	B3
C227	B1			R327	B1	R489	C2	R911	C1
C230	C1	R119	A2	R328	B1	R490	C2	R912	C1
C231	C1	R121	B2	R329	A2	R501	B1	R917	A2
C232	C1/2	R123	B2	R330	A2	R502	A1	R918	A2
C233	C1	R125	B3			R503	A2	R935	C1
		R128	C1	R331	C1	R504	A2	R936	C2
C234	C2			R332	B2	R505	A2	R999	B3
C235	C1	R133	B2	R333	C1	R506	A2		
C236	C1	R136	B1	R334	C1	R507	A/B2	RV200	A2
C237	C1	R137	B1	R335	C1	R508	A/B2	RV201	A3
C238	C1	R145	A2					RV202	B2
		R150	C1	R336	C1	R509	A3	RV203	B1
C239	C1			R337	C1	R510	A3	RV204	C2
C240	C2	R152	C1	R338	C1	R511	A2		
C242	C2	R161	C2	R339	C1	R512	A2/3	TP3	A2
C243	C2	R164	C2	R340	A1	R513	A2/3	TP4	A2
C244	C1	R200	A2					TP5	B3
		R213	A2	R341	A1	R514	A3	TP6	A2
C250	C2			R344	C1	R515	A3	TP7	B1
C260	B2	R214	A2	R345	C1/2	R516	A3	TP8	B1
C262	A2	R215	B2	R346	C1	R517	A3	TP9	C1
C270	C1	R216	B2	R347	C1	R518	B2	TP10	C2
C302	B2	R217	B2						
		R218	B2	R350	C1	R519	B2	U201	A2
C304	B2			R353	C1	R550	A3	U202	B2
C314	B2	R219	B2	R354	C1	R551	A3	U203	A2
C320	B2	R220	A2	R355	C1	R552	A3	U204	B1
C321	B2	R221	B2	R357	C2	R553	A3	U205	C1/2
C322	B2	R224	A/B2					U208	A3
		R225	B3	R358	C2	R554	A3	U209	A2
C324	B1			R359	C2	R635	A1	U210	C1
C341	C1	R226	B2	R360	C2	R639	C2	U212	C2
C342	B2	R227	B2	R361	C2	R651	B1	U213	C2
		R228	B2	R362	C2	R652	C1	U214	C1
						R653	C2	VR202	B3

MODEL HP8131A FIGURE 6.6-12.
OPT.CHANNEL 2 TRANSDUCER BD COMPONENT LAYOUT
OUTPUT BD (A26 OPT.020-A27/A28)

P/O A6 OUTPUT BOARD

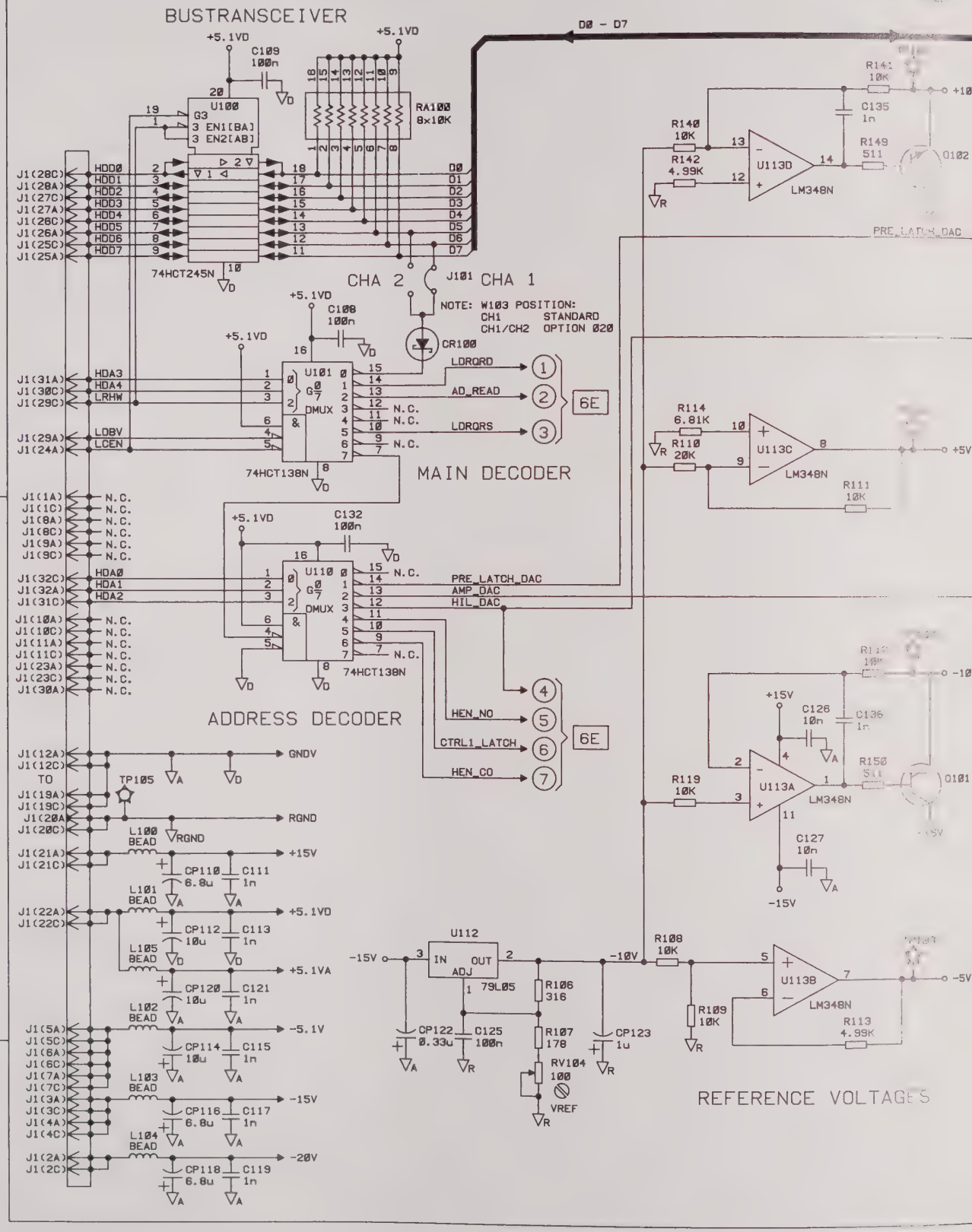

...ES + DEVICE BUS INTERFACE

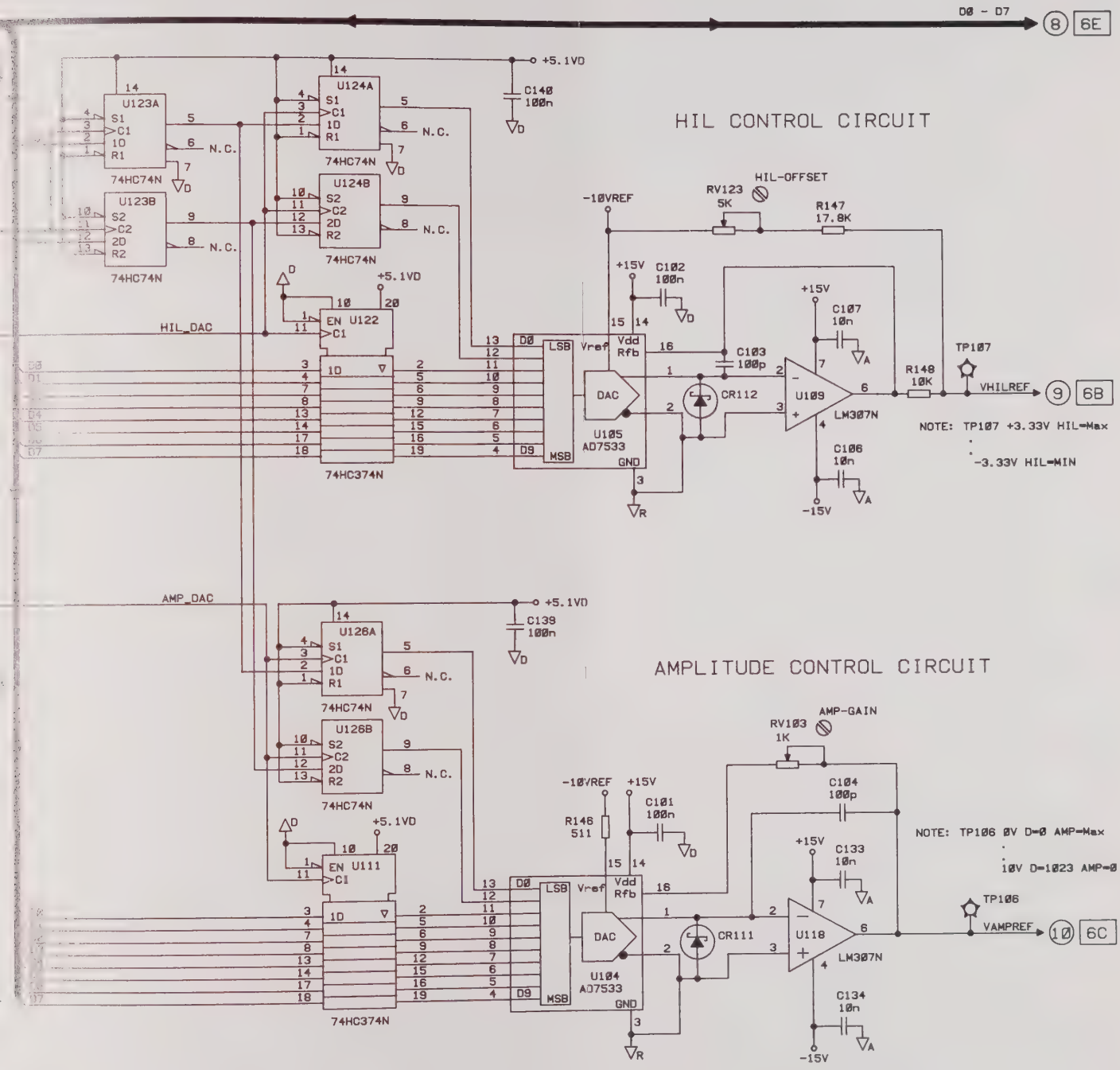

6A

MODEL HP8131A
FIGURE 6.6-13.
OUTPUT BOARD SCHEMATICS
(SHEET 1 OF 6)

P/O A6 OUTPUT BOARD

VOLTAGE SOURCES

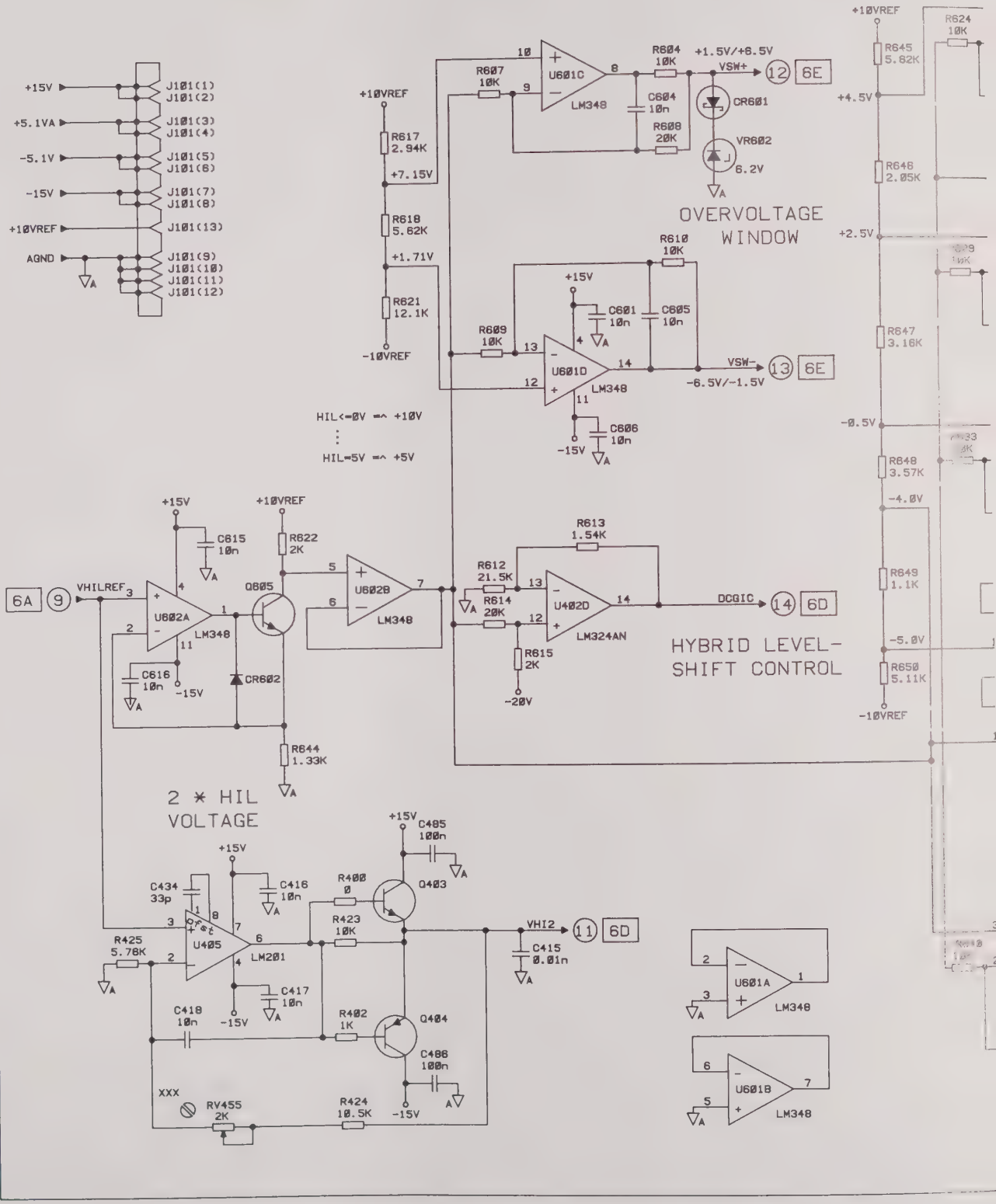

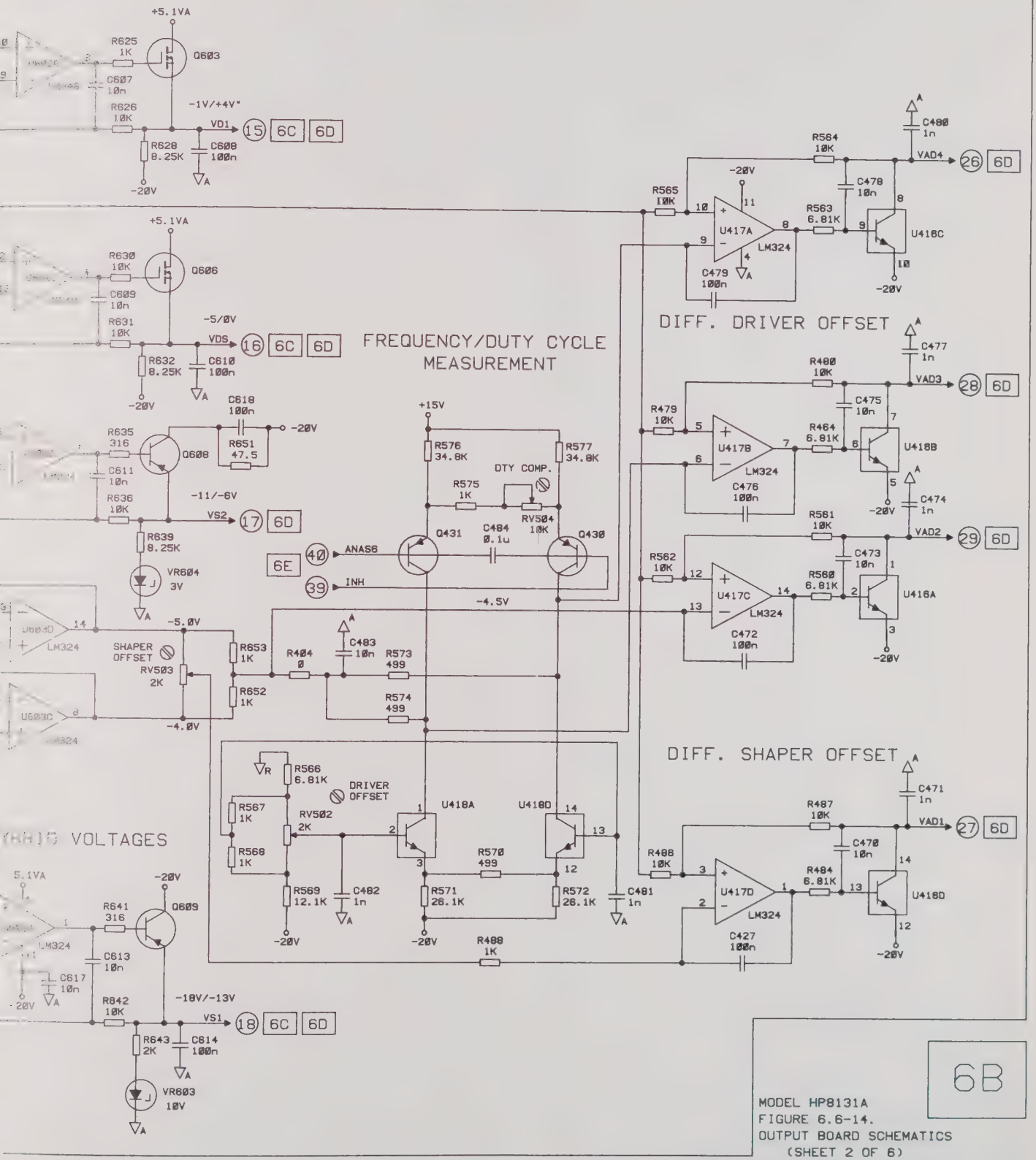

6B

MODEL HP8131A
FIGURE 6.6-14.
OUTPUT BOARD SCHEMATICS
(SHEET 2 OF 6)

P/O A6 OUTPUT BOARD

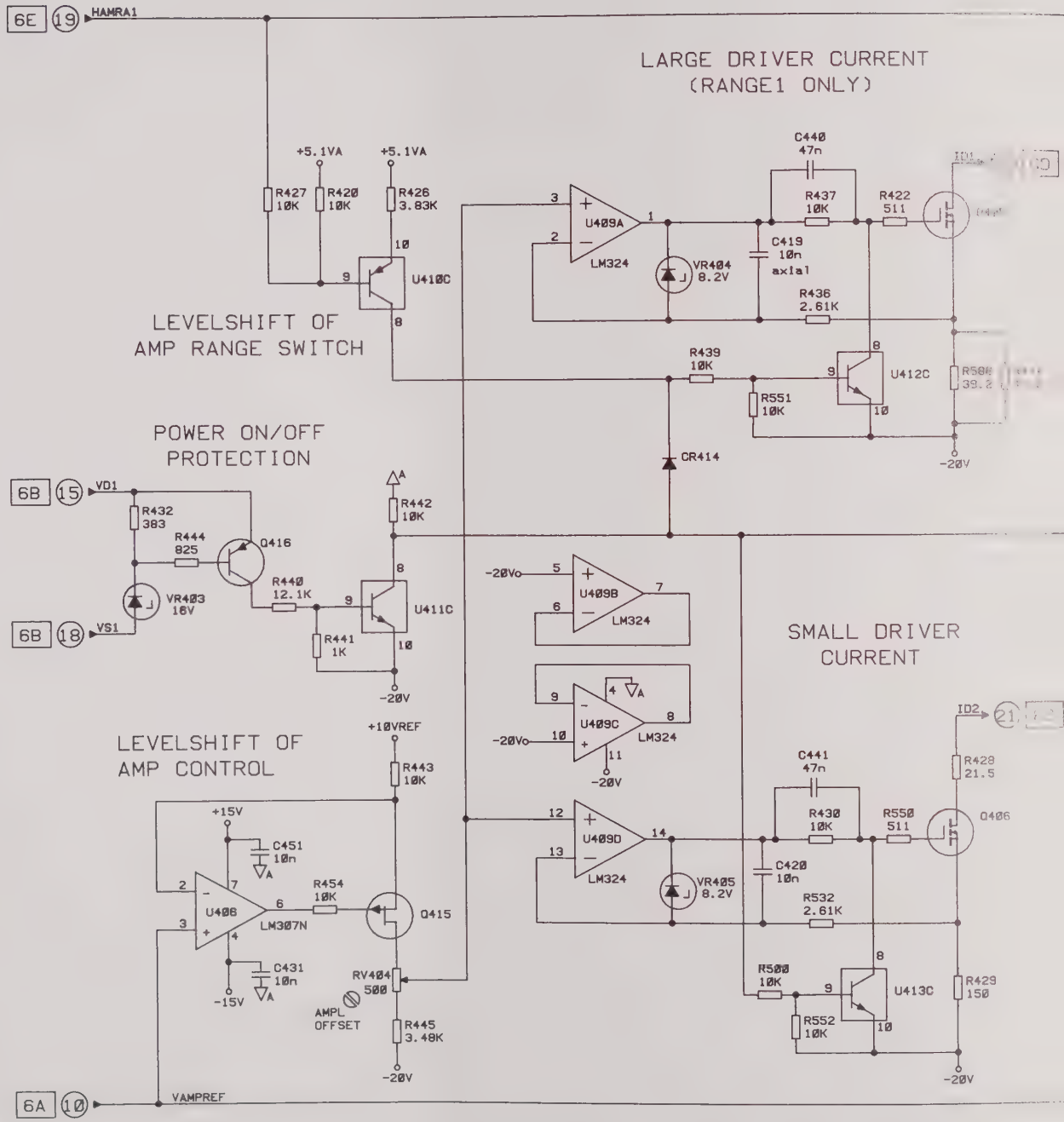

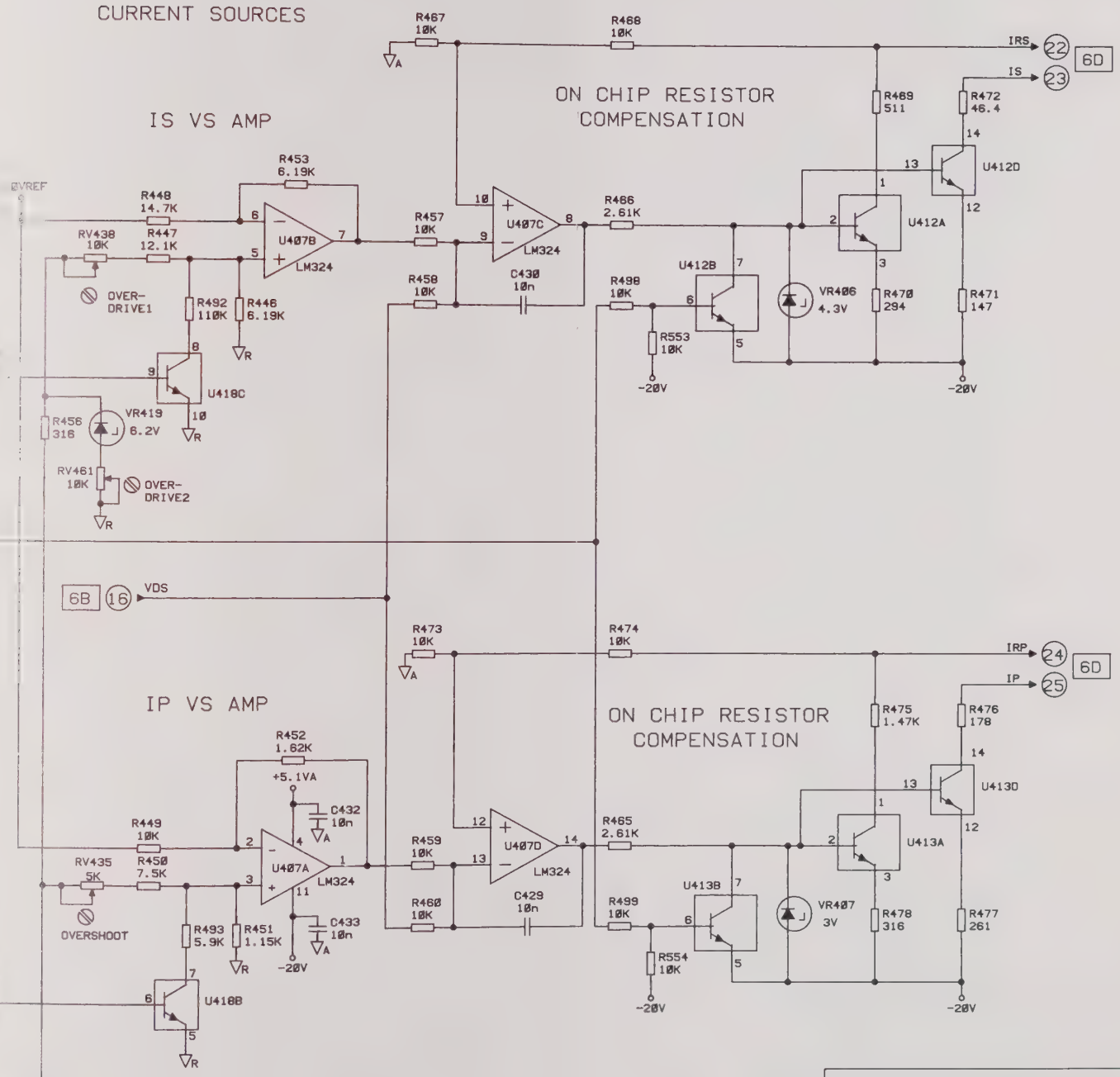

6C

MODEL HP8131A
FIGURE 6.6-15.
OUTPUT BOARD SCHEMATICS
(SHEET 3 OF 6)

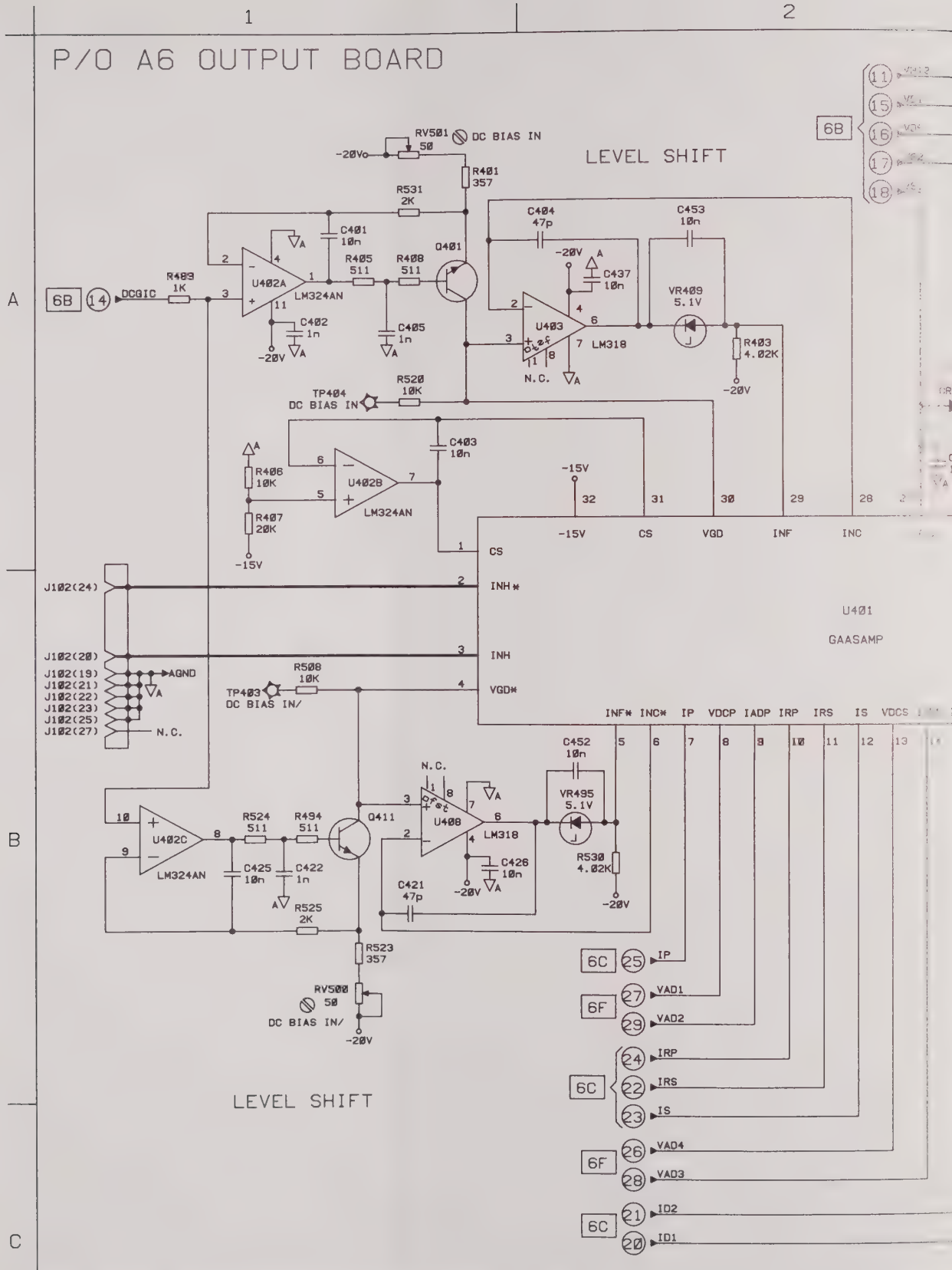

P/O A6 OUTPUT BOARD
LEVEL SHIFT
LEVEL SHIFT
U401
GAASAMP
RV501 50 DC BIAS IN
R401 357
R531 2K
C401 10n
R405 511
R408 511
Q401
C404 47p
C453 10n
C437 10n
VR409 5.1V
R403 4.02K
U402A LM324AN
U403 LM318
C402 1n
C405 1n
R489 1K
DCGIC
TP404 DC BIAS IN
R520 10K
C403 10n
R406 10K
R407 20K
U402B LM324AN
-15V
CS
VGD
INF
INC
INH*
INH
VGD*
INF* INC* IP VDCP IADP IRP IRS IS VDCS
J102(24)
J102(20)
J102(19)
J102(21)
J102(22)
J102(23)
J102(25)
J102(27)
AGND
N.C.
R508 10K
TP403 DC BIAS IN/
C452 10n
VR495 5.1V
R530 4.02K
U402C LM324AN
R524 511
R494 511
Q411
U408 LM318
C425 10n
C422 1n
C426 10n
C421 47p
R525 2K
R523 357
RV500 50 DC BIAS IN/
IP
VAD1
VAD2
IRP
IRS
IS
VAD4
VAD3
ID2
ID1

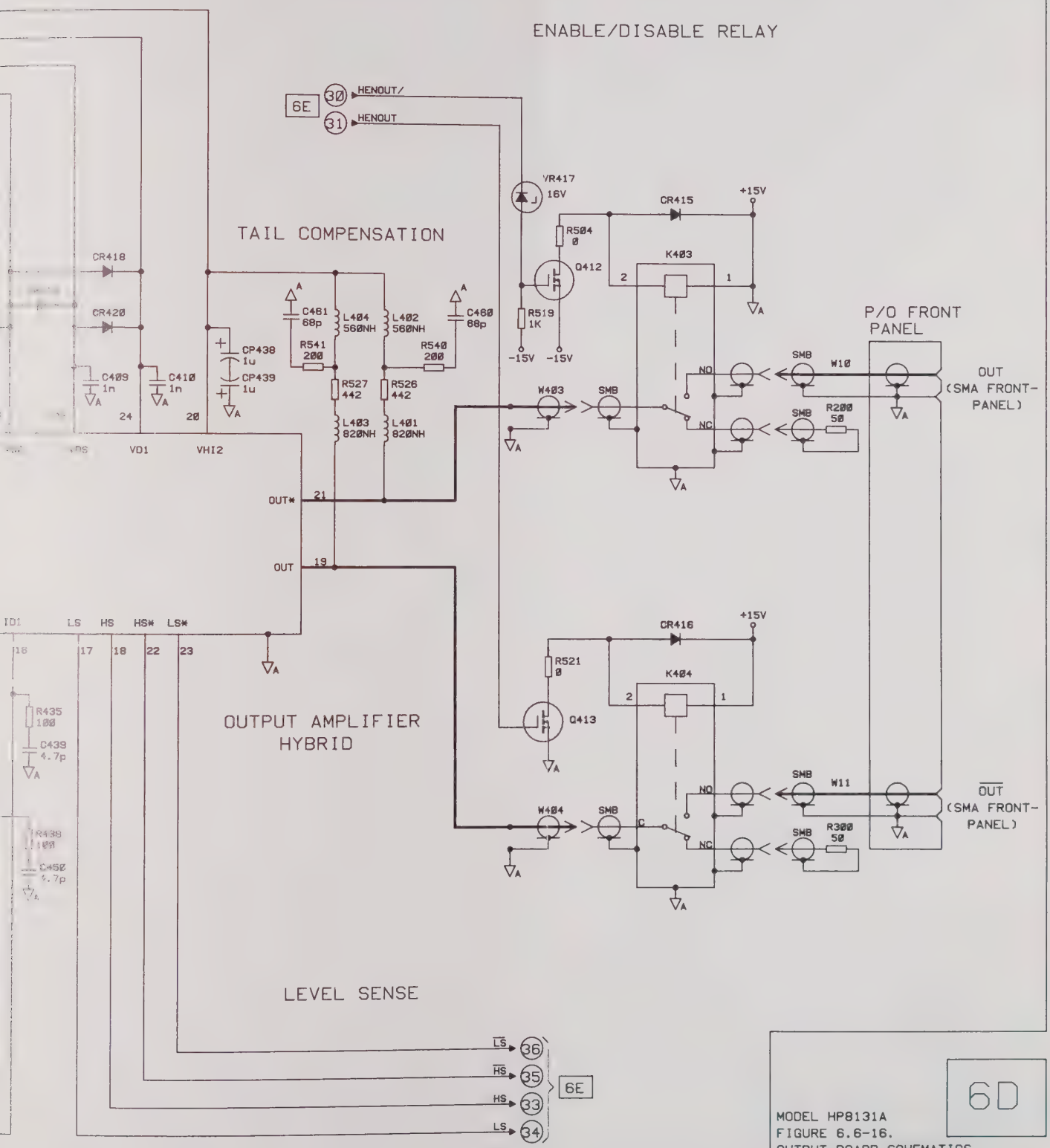

6D

MODEL HP8131A
FIGURE 6.6-16.
OUTPUT BOARD SCHEMATICS
(SHEET 4 OF 6)

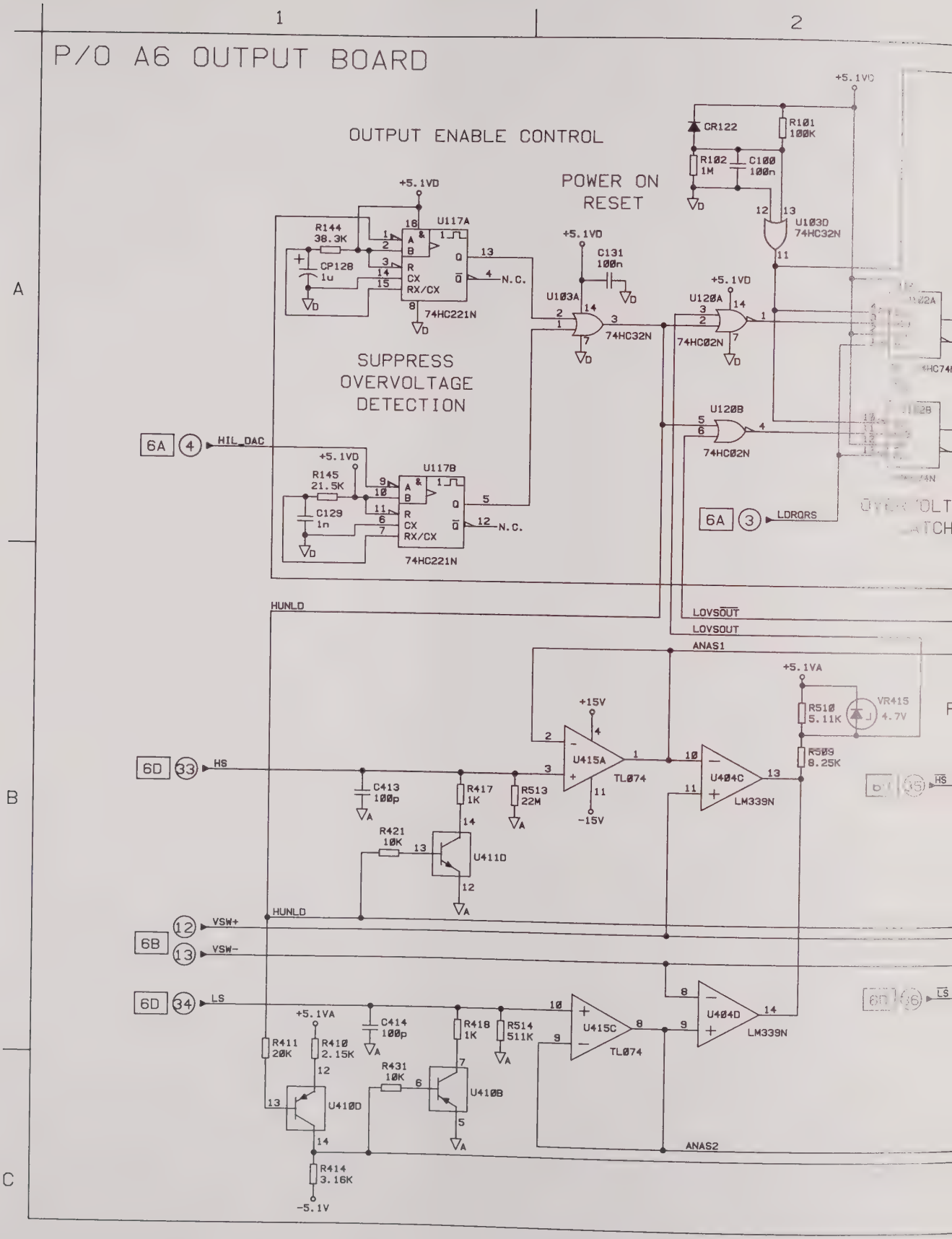
P/O A6 OUTPUT BOARD
OUTPUT ENABLE CONTROL
POWER ON RESET
SUPPRESS OVERVOLTAGE DETECTION
+5.1VD
+5.1VA
+15V
-15V
-5.1V
R144 38.3K
CP128 1u
U117A
74HC221N
R145 21.5K
C129 1n
U117B
C131 100n
U103A
74HC32N
CR122
R101 100K
R102 1M
C100 100n
U103D 74HC32N
U120A
74HC02N
U120B
6A 4 HIL_DAC
6A 3 LDRQRS
HUNLD
LOVSOUT
ANAS1
ANAS2
6D 33 HS
6D 35 HS
6B 12 VSW+
6B 13 VSW-
6D 34 LS
6D 36 LS
C413 100p
R417 1K
R513 22M
U415A
TL074
R421 10K
U411D
R510 5.11K
VR415 4.7V
R509 8.25K
U404C
LM339N
C414 100p
R418 1K
R514 511K
U415C
U404D
R411 20K
R410 2.15K
R431 10K
U410D
U410B
R414 3.16K

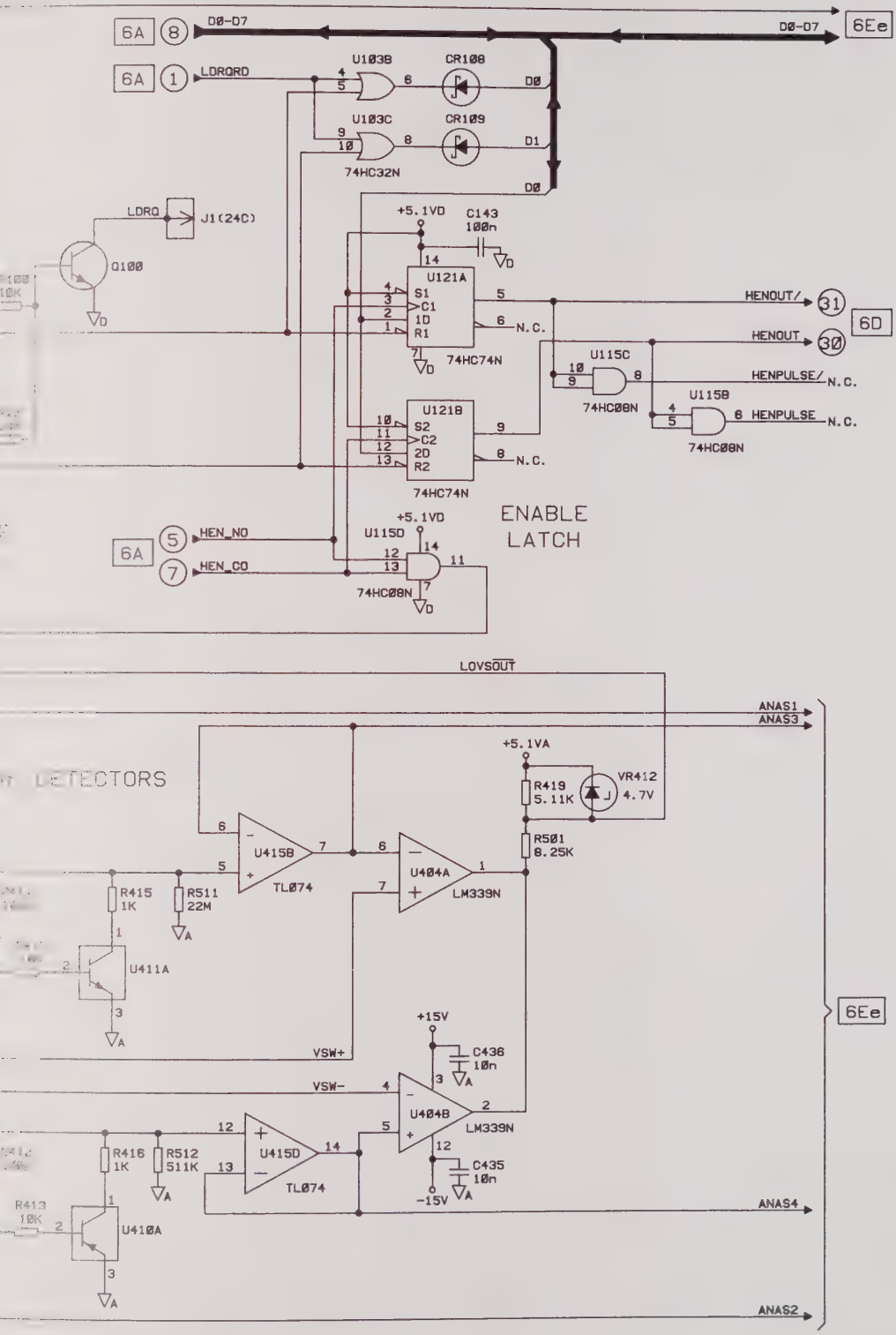

6E

MODEL HP8131A
FIGURE 6.6-17.
OUTPUT BOARD SCHEMATICS
(SHEET 5 OF 6)

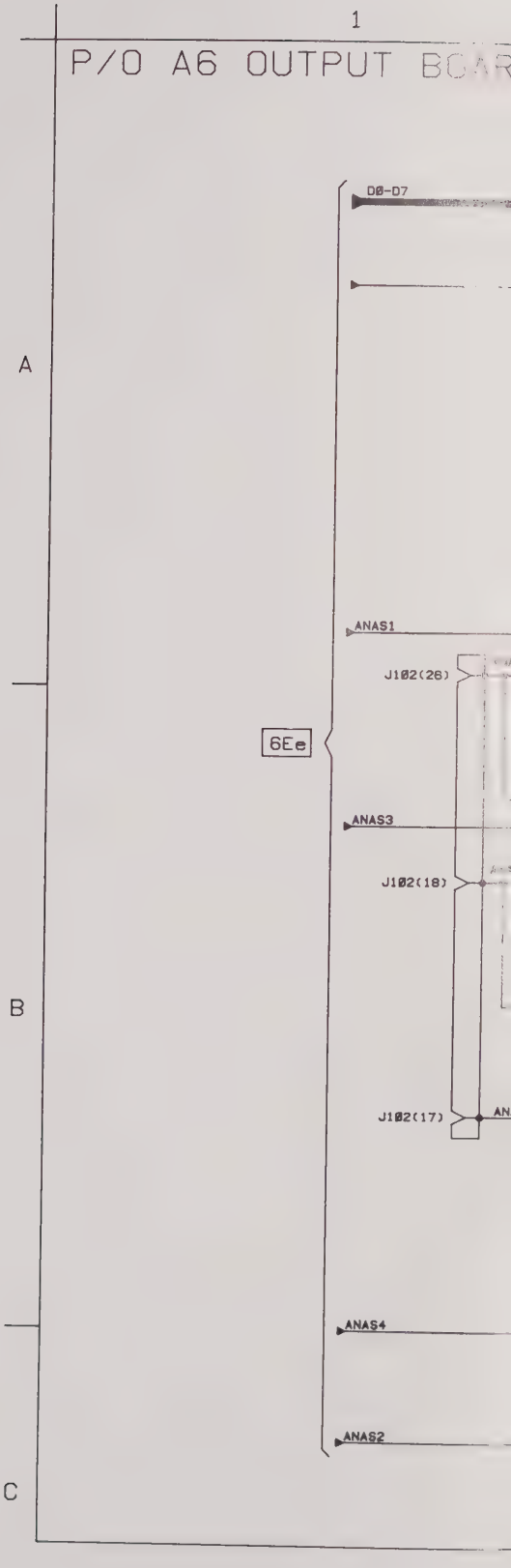
1
P/O A6 OUTPUT BOAR
A
B
C
D0-D7
ANAS1
J102(28)
6Ee
ANAS3
J102(18)
J102(17)
ANAS4
ANAS2

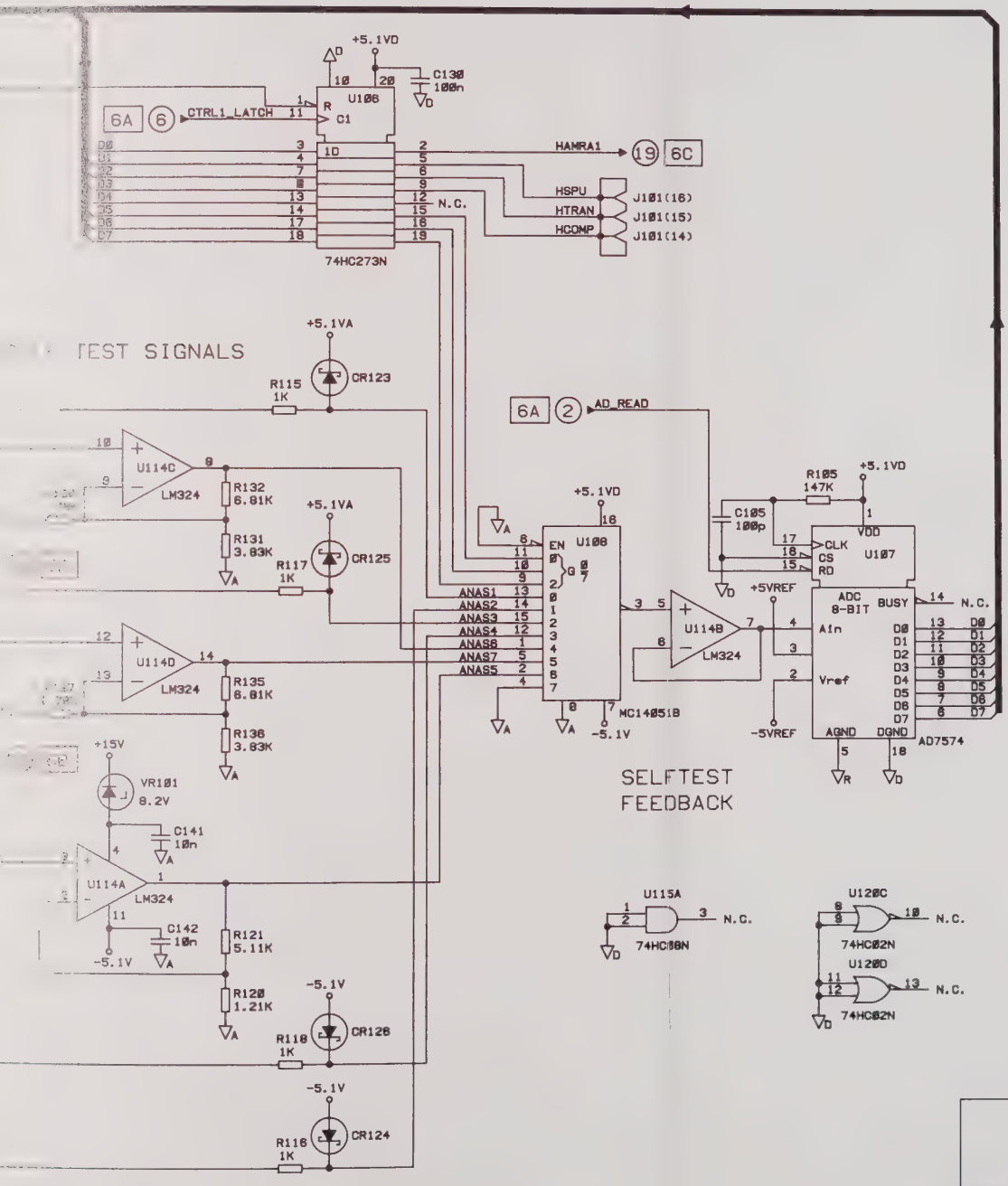

6E

MODEL HP8131A
FIGURE 6.6-18.
OUTPUT BOARD SCHEMATICS
(SHEET 6 OF 6)

P/O A16/A17 TRANSDUCER BOARD

A

P/O FRONT PANEL
EXT INPUT
W5
J203 SMB
J204 SMB
W6
TRIGINPUT
5B
TO TIMING BD A5/A25 J200
-5.1V
C257 10n
CR201A
C256 47n
R267 825
5mm printed line
CR201B
R266 31.6
R166 21.5
K201B
RG1T-12
C258 1n
R262 1K
VR201 11V
-15V
-5.1V
+10VREF
R477 5.62K
R378 10K
R377 17.8K
R479 3.83K
R379 3.16K
J101(9)
J101(10)
J101(11)
J101(12)
AGND
CR200
R367 31.6
+15V
J101(15)
HTRAN
R259 4.64K
Q205
J101(1)
J101(2)
+15V
J101(3)
J101(4)
+5.1V
J101(5)
J101(6)
-5.1V
J101(7)
J101(8)
-15V
J101(13)
+10VREF

TRIGGER OUTPUT AMPLIFER

N.C.
N.C.

B

FROM TIMING BD A5/A25 J303
5C
TRIGOUTIN
W301
J700 SMB
+5.1V
R919 464
R700 68.1
5mm
C700 100n
R701 2.15K
+15V
C703 10n
R705 2.15K
U701
LM318
CP702 1u
C704 10n
R733 2.61K
R706 1.78K
R711 1K
R702 4.64K
R810 12.1K
R710 12.1K
U702C
LM324
R709 21.5K
U702B
LM324
R707 21.5K
Q700
C706 10n
R708 21.5K
R713 10K
R714 10K
R814 10K
C705 10n
R704 2.15K
CP708 1u
R703 2.15K
R734 2.61K
-15V
+10VREF
R729 21.5K
R728 46.4K
R730 4.64K
R726 4.64K
R830 316
R725 21.5K
-5.1V

C

LEVEL SHIFT

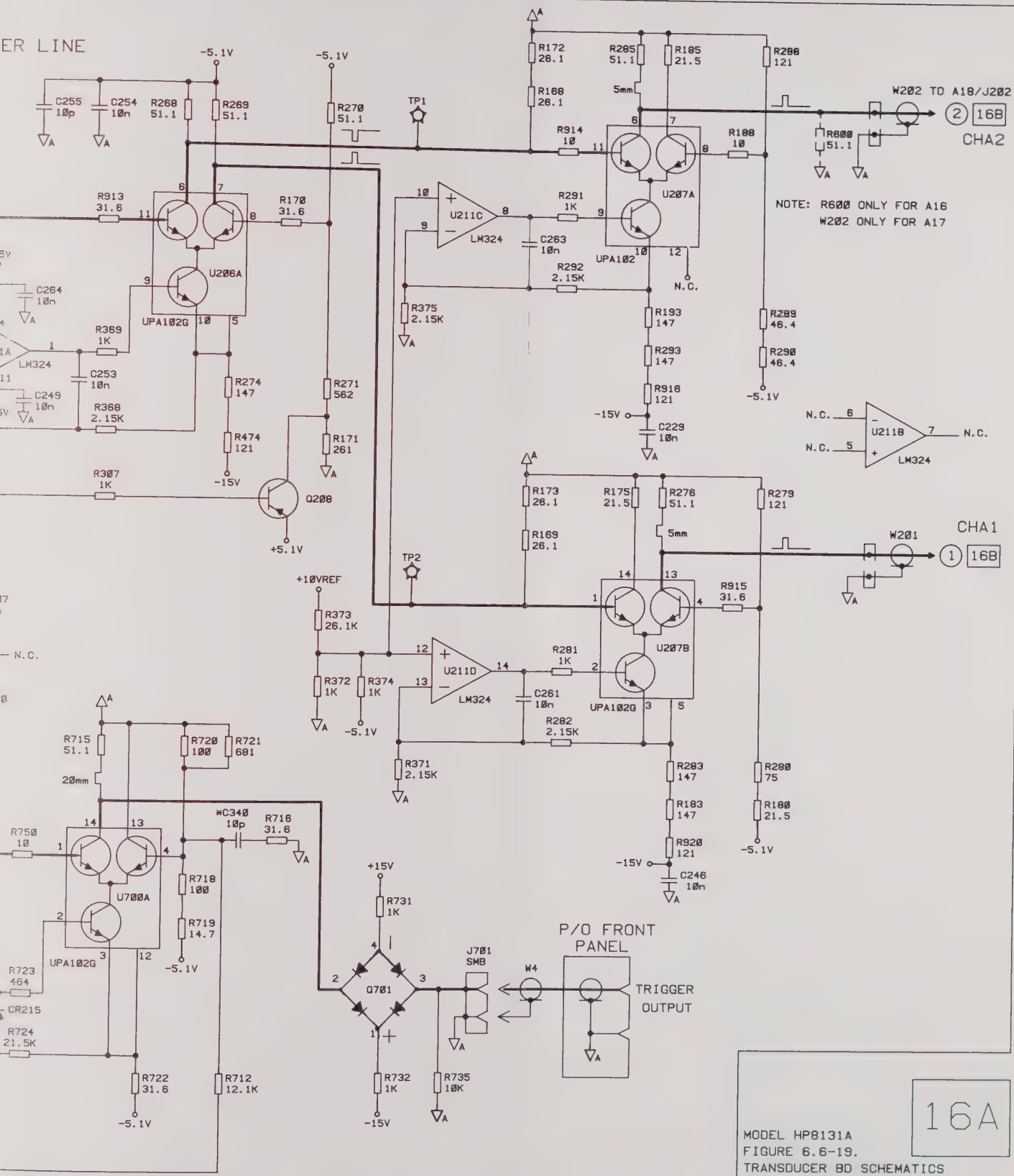

16A

MODEL HP8131A
FIGURE 6.6-19.
TRANSDUCER BD SCHEMATICS
(SHEET 1 OF 4)

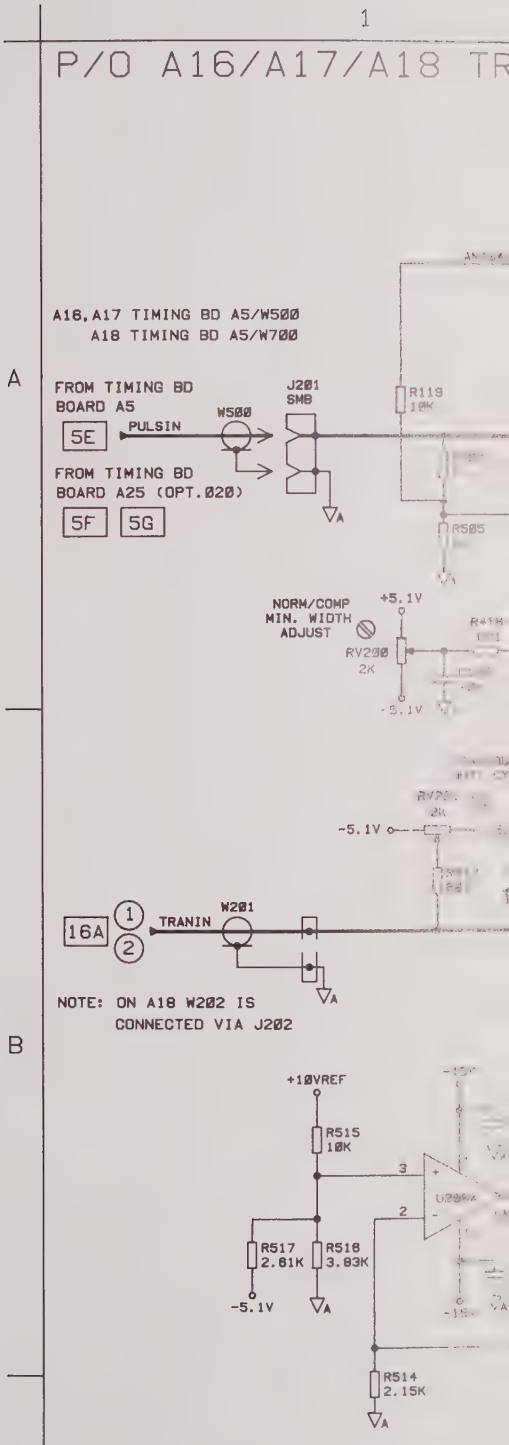
1
P/O A16/A17/A18 TR
A
B
C
A16, A17 TIMING BD A5/W500
A18 TIMING BD A5/W700
FROM TIMING BD
BOARD A5
5E
PULSIN
W500
J201
SMB
FROM TIMING BD
BOARD A25 (OPT.020)
5F
5G
R505
NORM/COMP
MIN. WIDTH
ADJUST
+5.1V
RV200
2K
-5.1V
16A
TRANIN
W201
NOTE: ON A18 W202 IS
CONNECTED VIA J202
+10VREF
R515
10K
R517
2.61K
R518
3.83K
R514
2.15K

NSDUCER BOARD

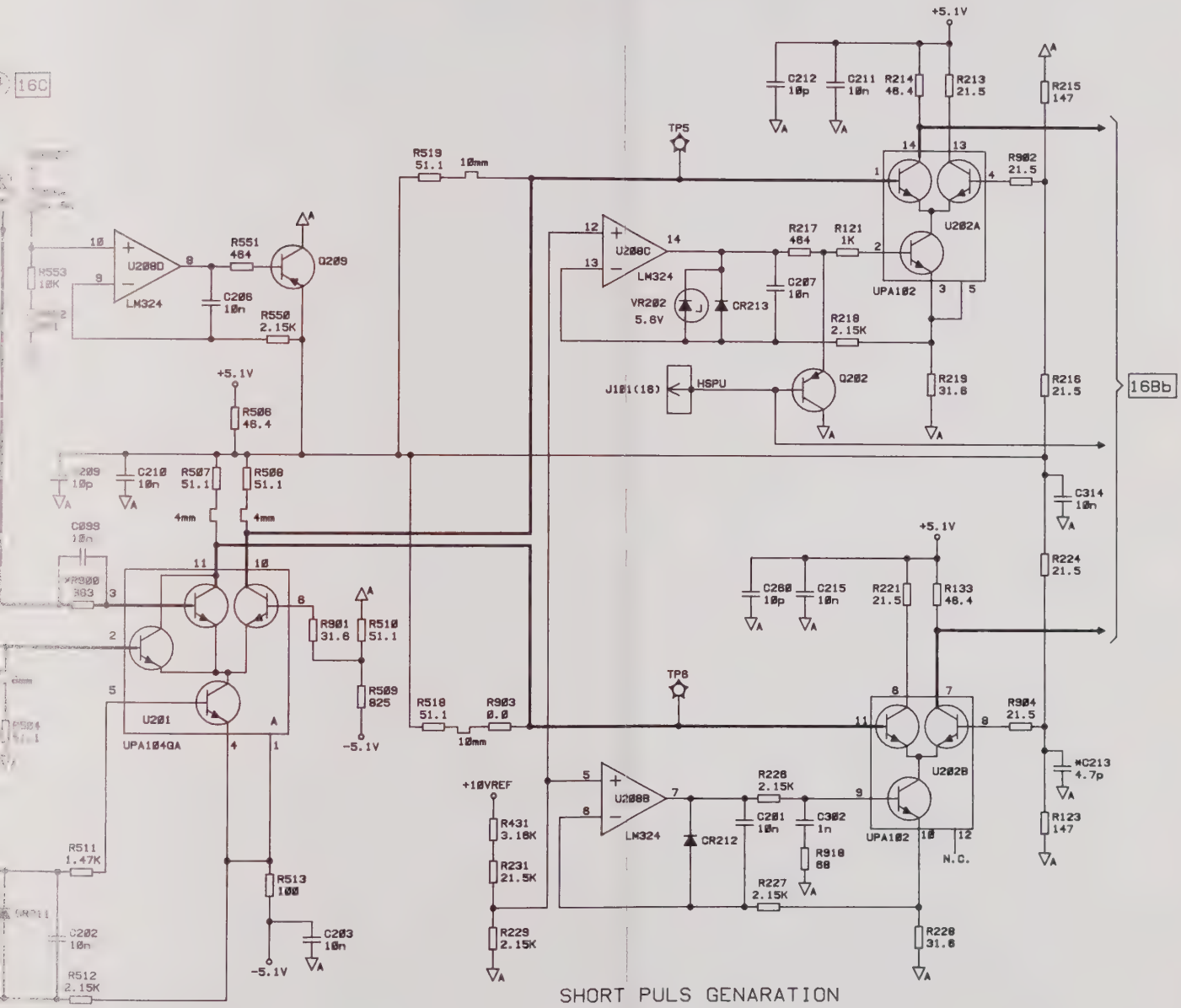

SHORT PULS GENARATION

16B

MODEL HP8131A
FIGURE 6.6-21.
TRANSDUCER BD SCHEMATICS
(SHEET 2 OF 4)

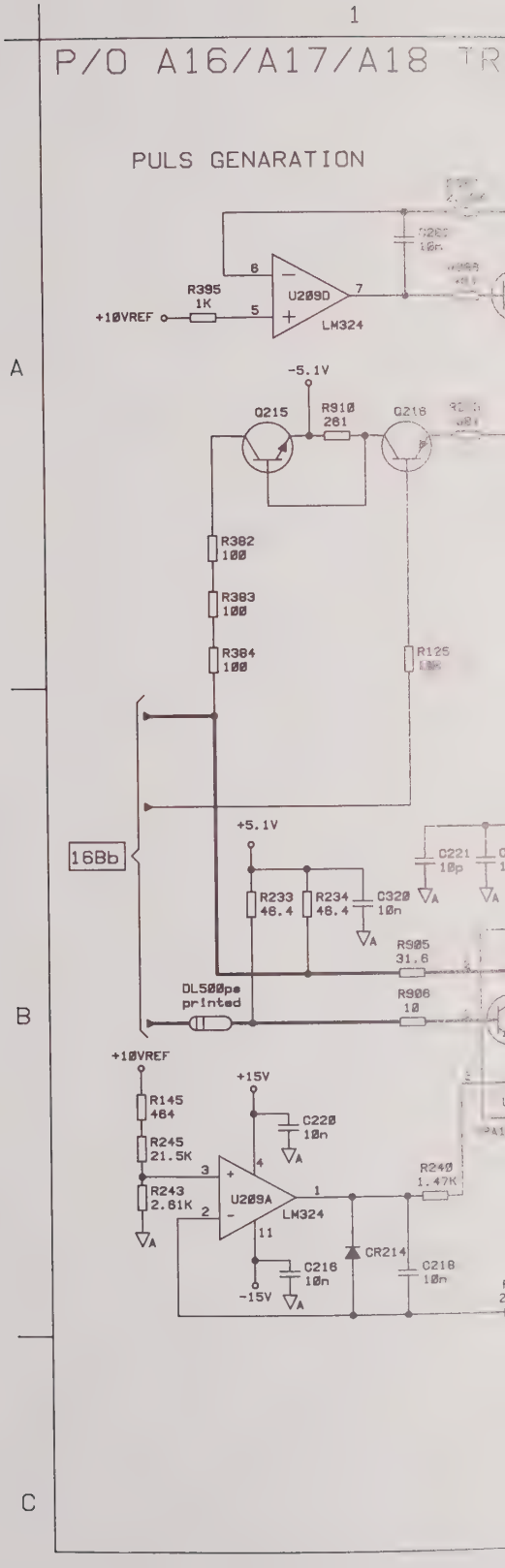
1
P/O A16/A17/A18 TR
PULS GENARATION
A
B
C
U2090
LM324
R395
1K
+10VREF
-5.1V
Q215
R910
261
Q218
R382
100
R383
100
R384
100
R125
16Bb
+5.1V
R233
48.4
R234
48.4
C320
10n
C221
10p
R905
31.6
DL500ps
printed
R906
10
+10VREF
+15V
R145
464
R245
21.5K
R243
2.61K
U209A
LM324
C220
10n
R240
1.47K
CR214
C216
10n
-15V
C218
10n

ANSDUCER BOARD

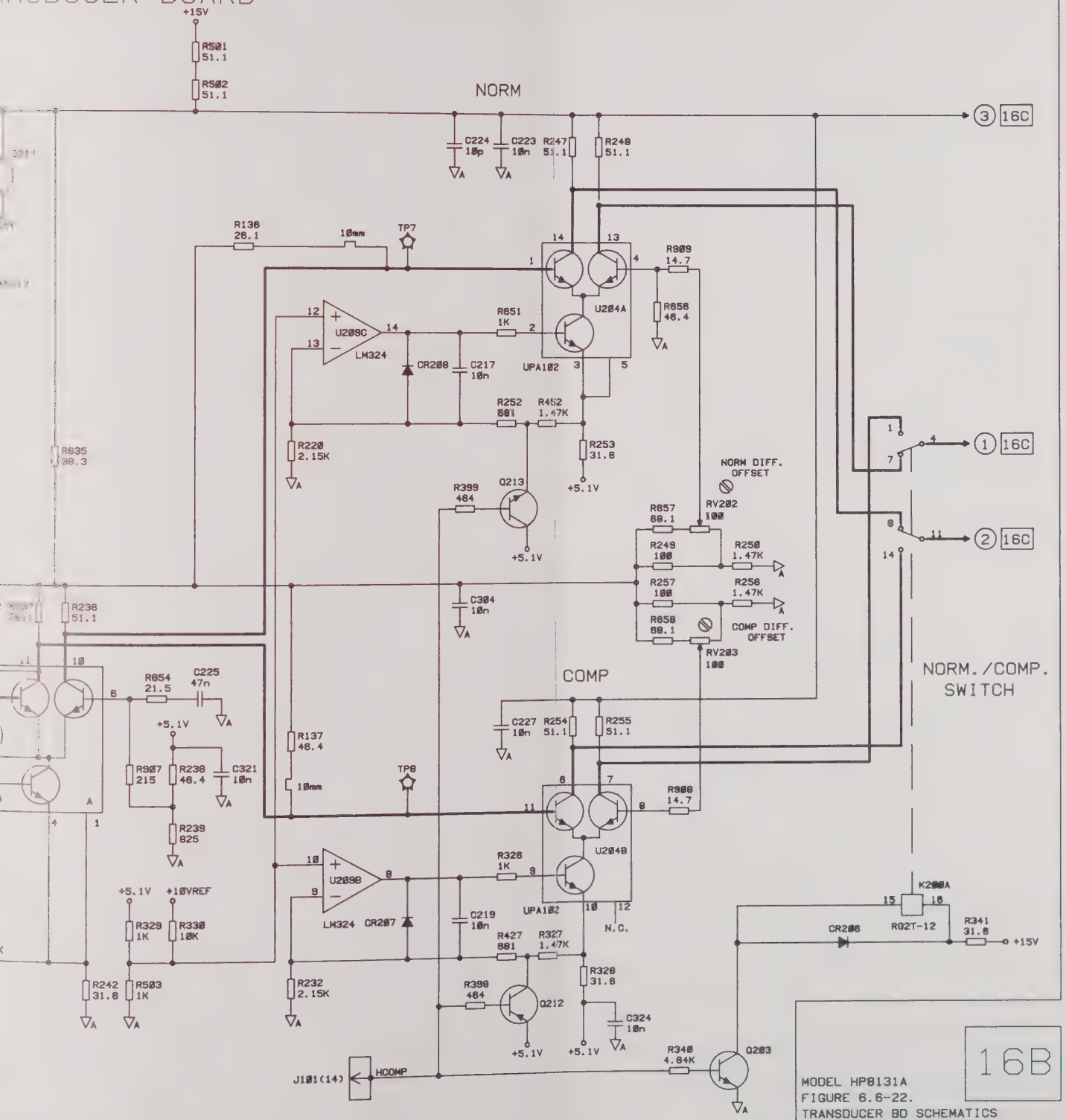

16B

MODEL HP8131A
FIGURE 6.6-22.
TRANSDUCER BD SCHEMATICS
(SHEET 3 OF 4)

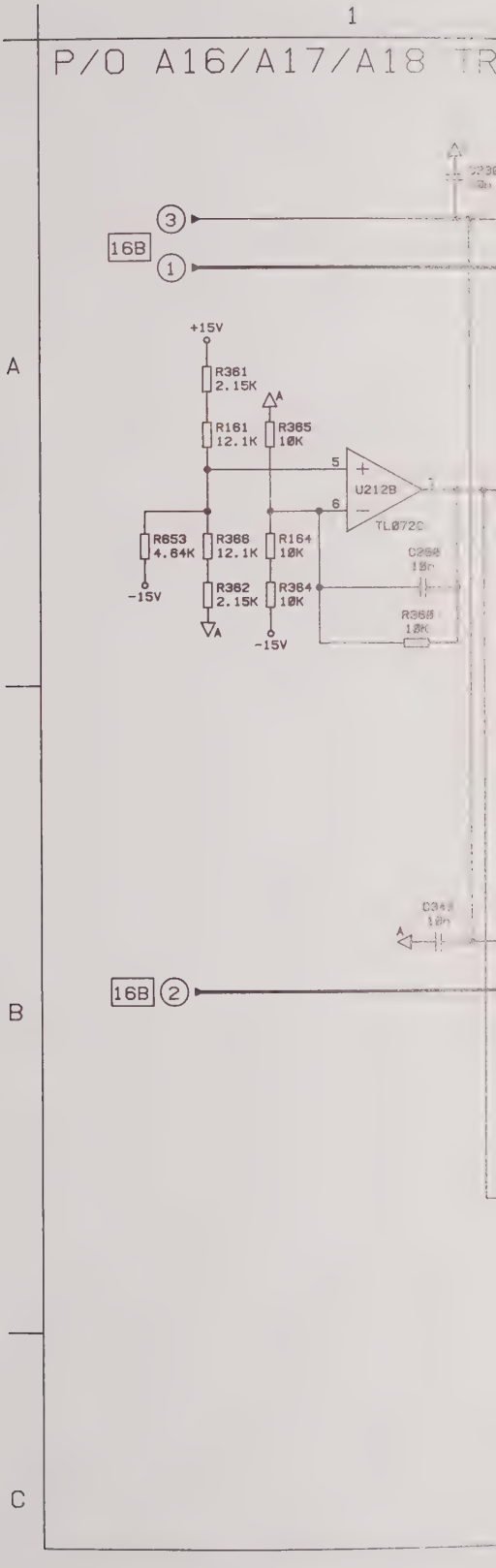
1
P/O A16/A17/A18
A
B
C
16B
3
1
16B
2
+15V
R361
2.15K
R161
12.1K
R365
10K
5
U212B
6
TL072C
R653
4.64K
R366
12.1K
R164
10K
-15V
R362
2.15K
R364
10K
-15V

NSDUCER BOARD

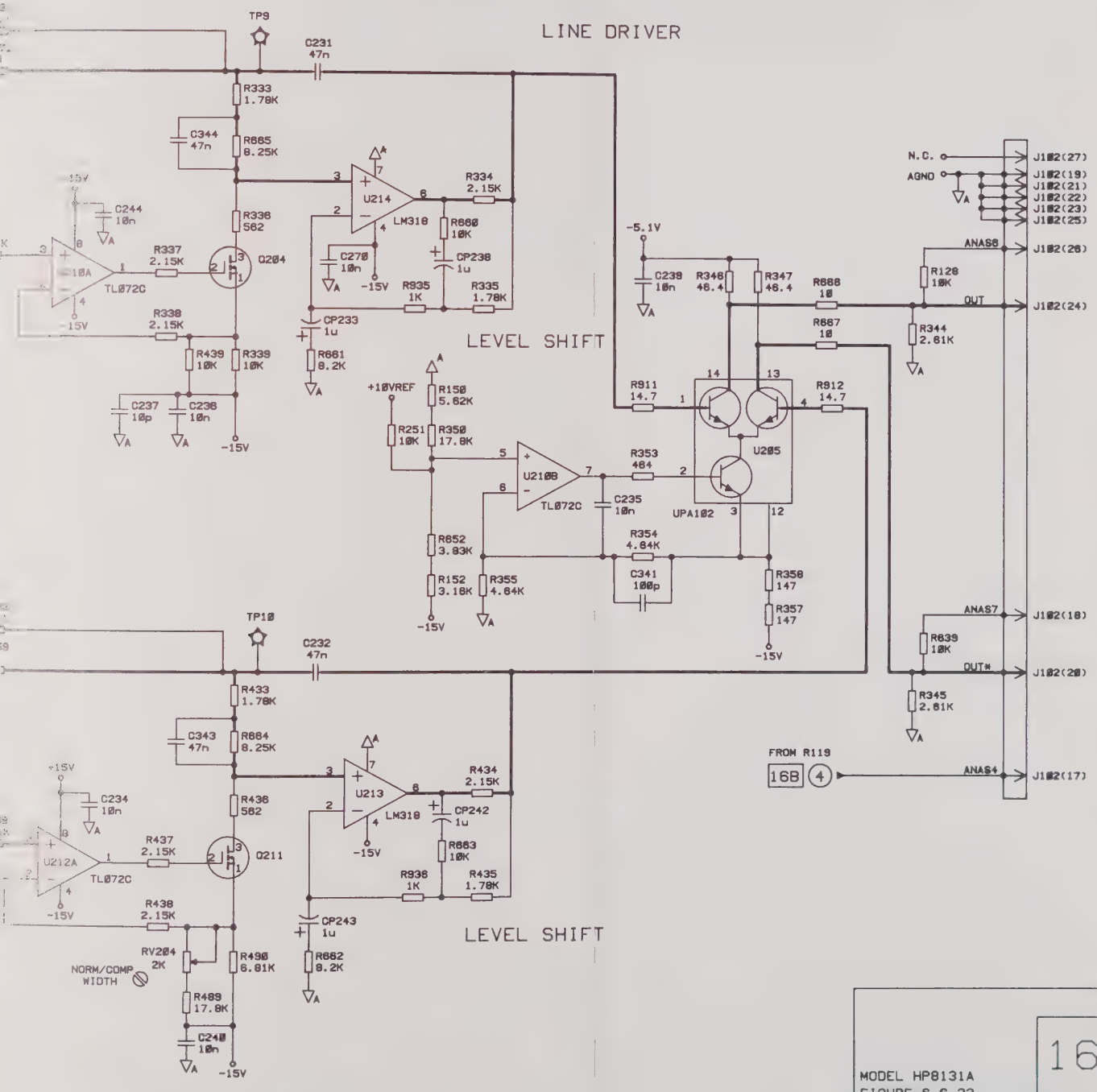

16C

MODEL HP8131A
FIGURE 6.6-23.
TRANSDUCER BD SCHEMATICS
(SHEET 4 OF 4)

Troubleshooting

HP 8130A Self-test

After power-on the HP 8130A's self-test circuit checks the following:

- Microprocessor board:
  - keyboard controller
  - static RAM
  - ROM
  - timer cycle
  - device bus
- Timing board
  - EEPROM (contains the adjust values for the timing parameter)
- Output board
  - input levels from the timing board
  - the SMD board output levels
  - the hybrid output levels.
  - EEPROM (contains the adjust values for the level/slope parameter)

The following four pages of flow diagrams show the logical route followed by the program to derive particular error displays. These diagrams should assist in locating the cause of a fault.

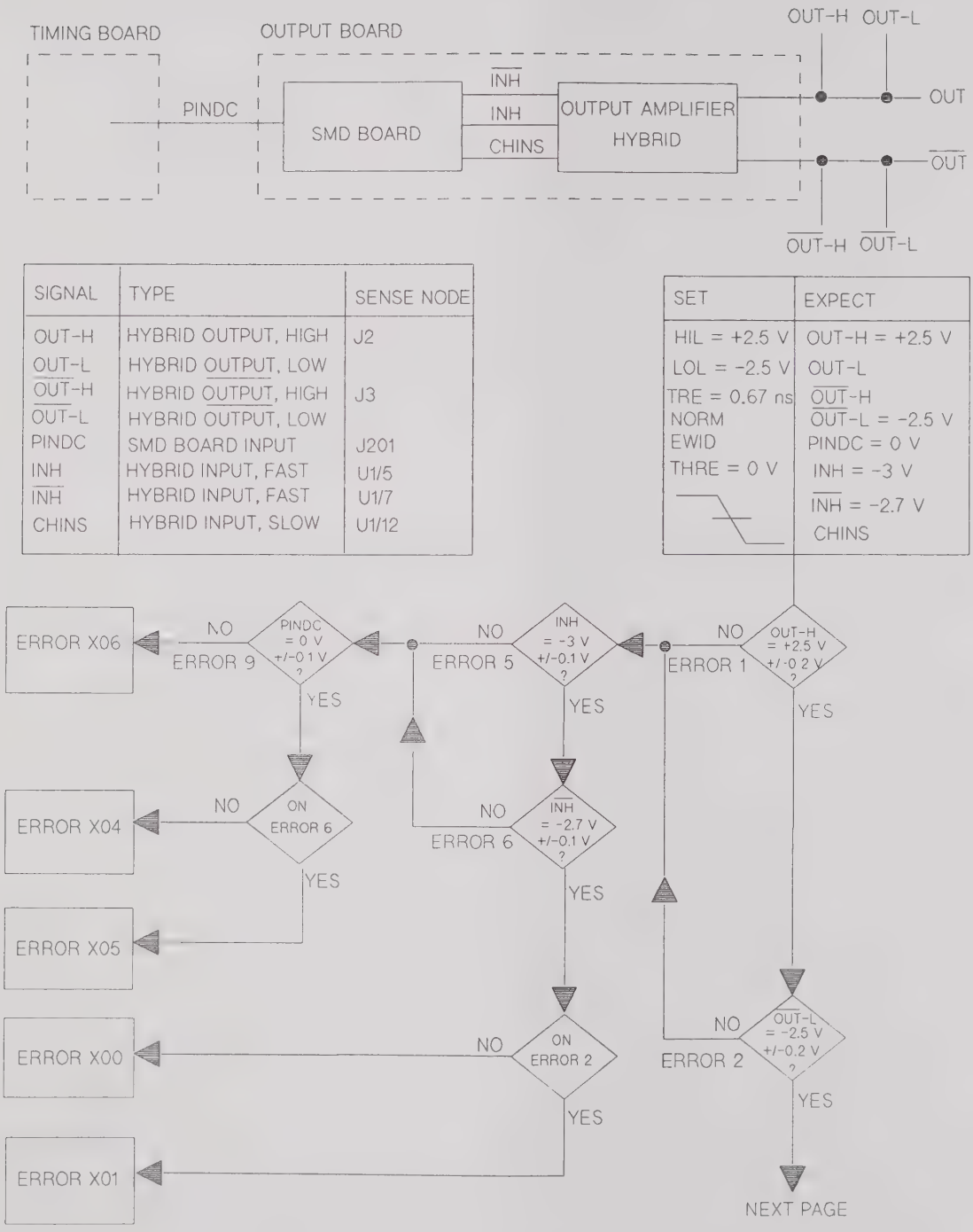

Figure 6-7-1. HP 8130A Flowchart - Part 1

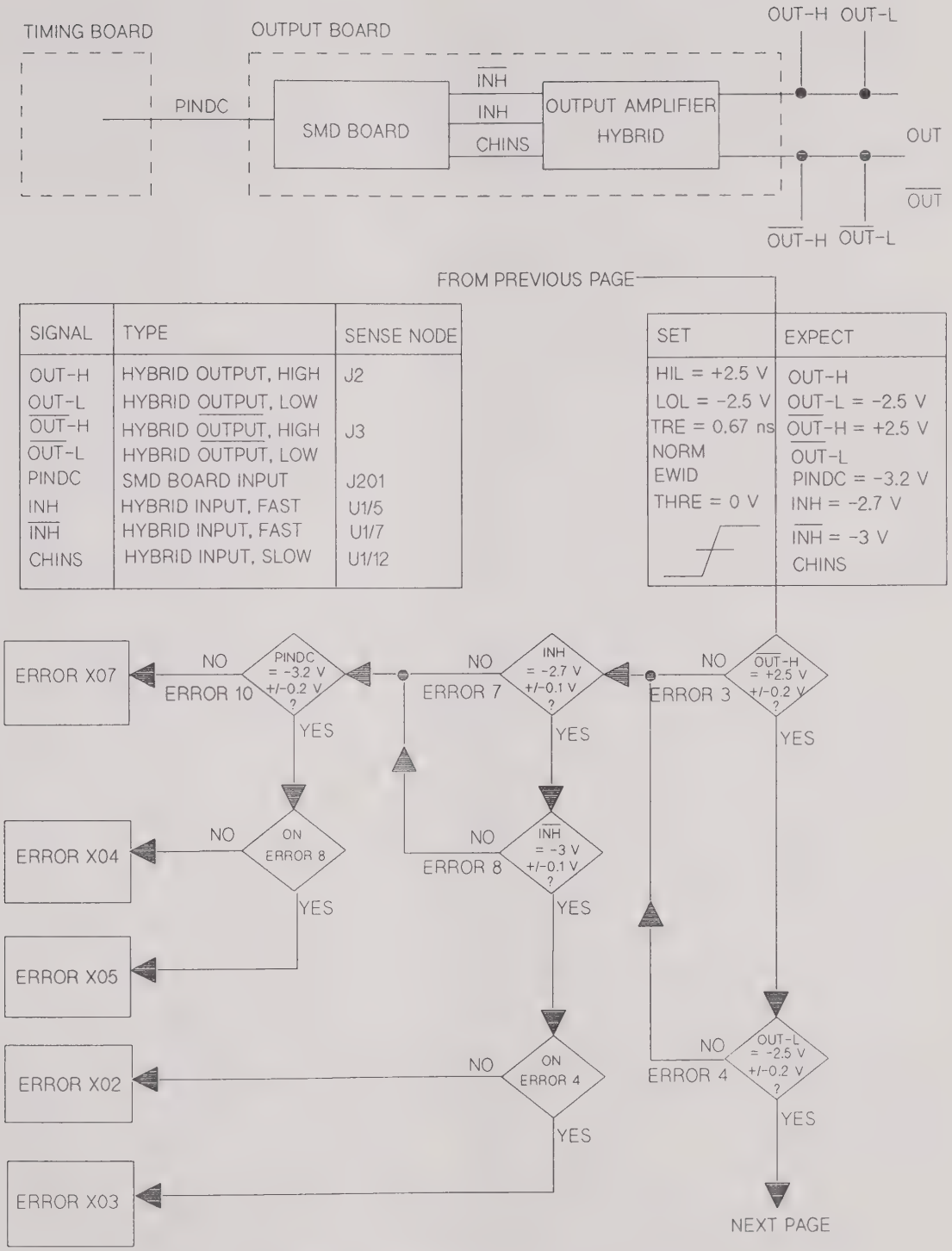

Figure 6-7-2. HP 8130A Flowchart - Part 2

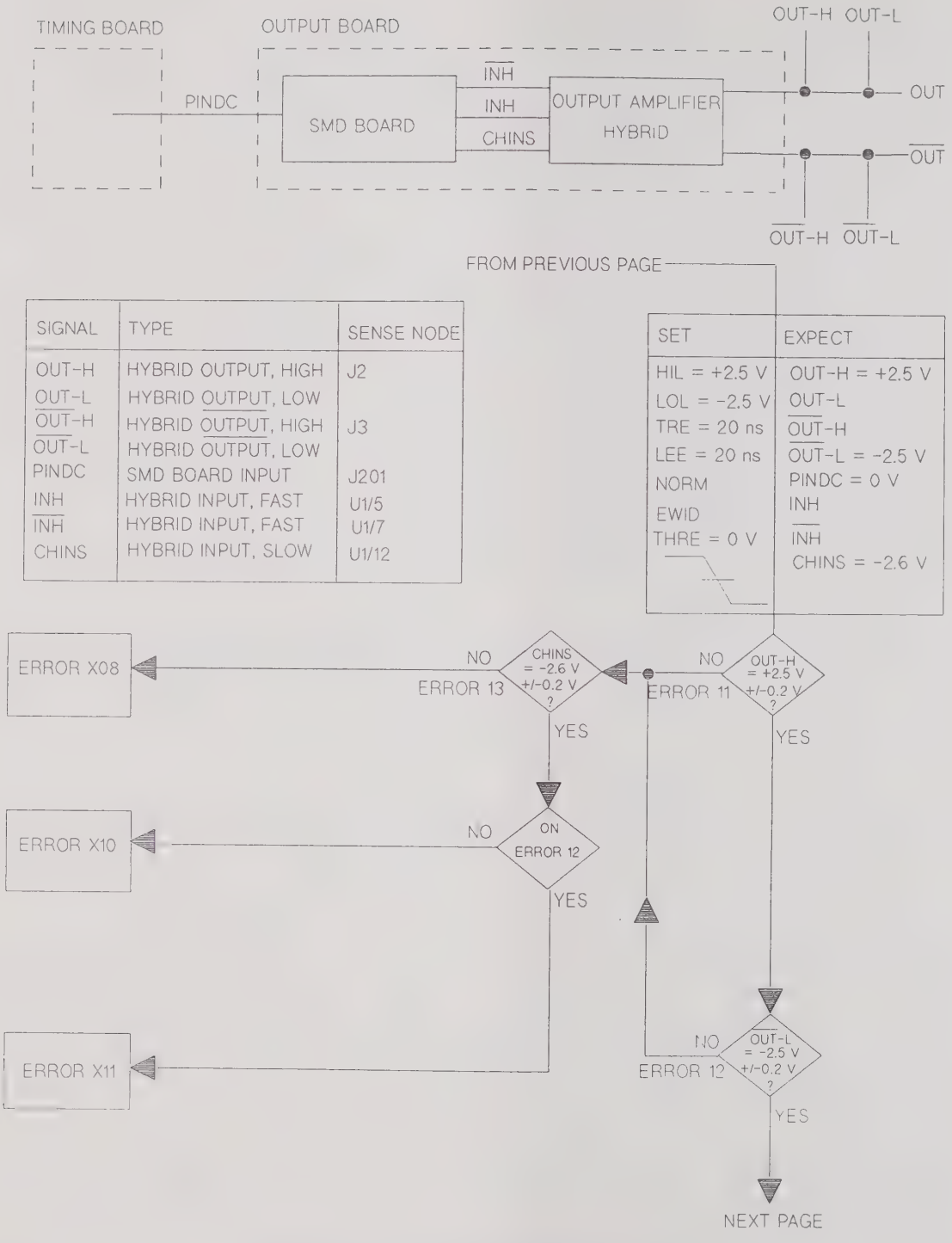

Figure 6-7-3. HP 8130A Flowchart - Part 3

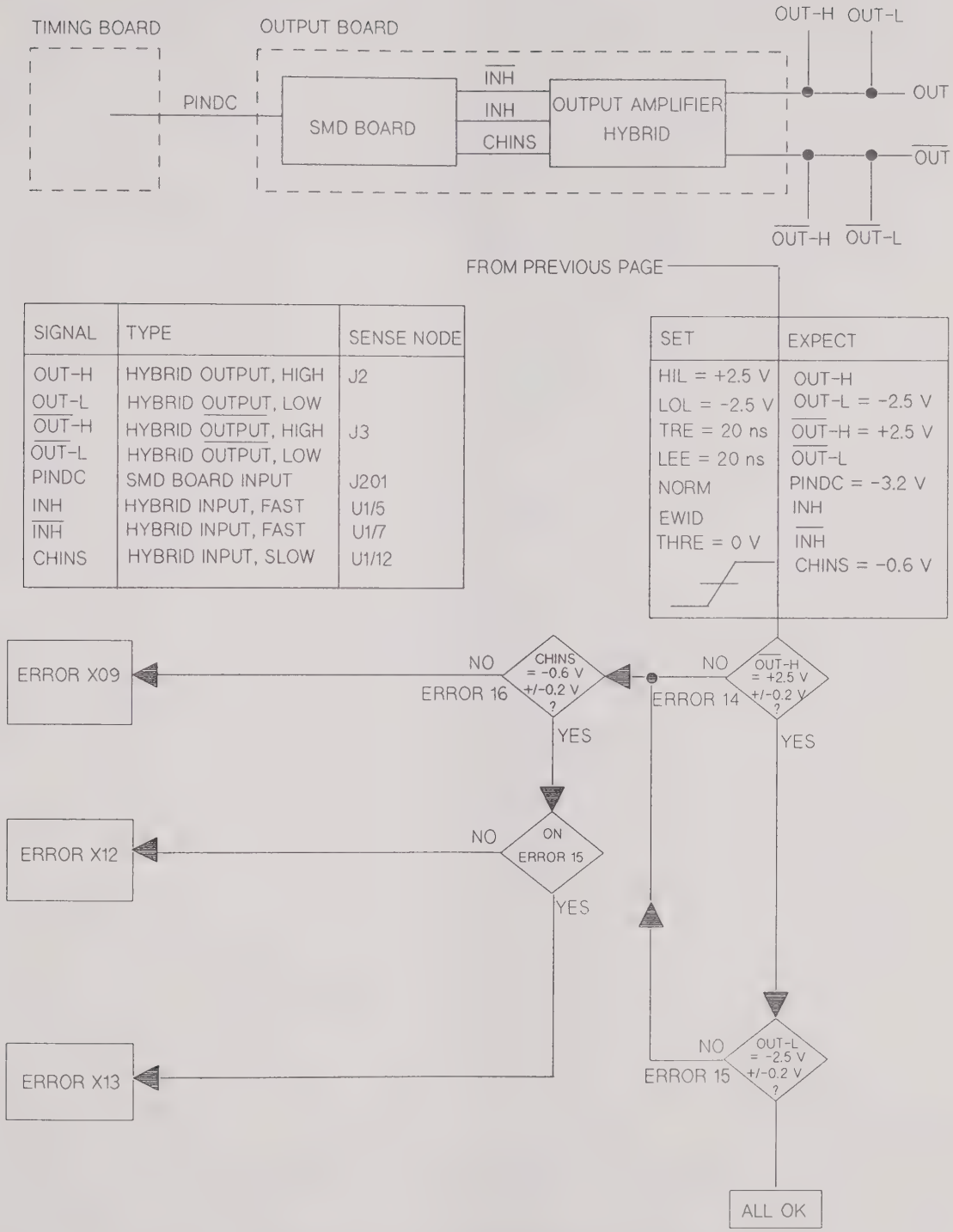

Figure 6-7-4. HP 8130A Flowchart - Part 4

Error Messages

The HP 8130A carries out its self-test at power-on. During this series of tests all the front panel LEDs are lit. If an error is detected an error message is indicated on the front panel display.

The first digit (left-hand side) of the error display is a letter:

- **F** - displayed indicates a FATAL ERROR; the HP 8130A ceases operation
- **E** - displayed indicates a MINOR ERROR; the HP 8130A continues to function with some restrictions. These restrictions are dependent on the type of fault.

The second digit has the following significance:

- **1** - indicates an error on the CPU board
- **2** - indicates an error on the timing board
- **3** - indicates an error on the output board 1
- **4** - indicates an error on the output board 2
- **5** - indicates a configuration error.

The third and forth digits provide information about the exact fault.

Fatal Error Messages

Table 6-7-1. Power-On Self-Test Errors

Error Code	CPU Board Error Message
F100	Static RAM (number 2) error
F101	Static RAM (number 1) error
F102	EPROM (number 2) error
F103	EPROM (number 1) error
F104	Timer cycle error
F105	Keyboard controller error
F106	Device bus error
F500	Configuration error An incorrect combination of timing and output boards has been installed in the instrument.

Minor Error Messages

Error Code	Timing Board Error Message
E200	The adjust values on the EEPROM have been destroyed. Correct parametric timing is not possible.

Channel 1 Error Code	Channel 2 Error Code	Output Board Error Message
E300	E400	The high-level of the normal output (differential signal) of the hybrid board has failed (fast slope input).
E301	E401	The low-level of the complement output (differential signal) of the hybrid board has failed (fast slope input).
E302	E402	The high-level of the complement output (differential signal) of the hybrid board has failed (fast slope input).
E303	E403	The low-level of the normal output (differential signal) of the hybrid board has failed (fast slope input).
E304	E404	The fast slope normal output of the SMD board has failed.
E305	E405	The fast slope complement output of the SMD board has failed.
E306	E406	The high-level of the SMD board input signal has failed.
E307	E407	The low-level of the SMD board input signal has failed.
E308	E408	The low-level of the slow slope output from the SMD board has failed.
E309	E409	The high-level of the slow slope output from the SMD board has failed.

Channel 1 Error Code	Channel 2 Error Code	Output Board Error Message
E310	E410	The high-level of the normal output (differential signal) of the hybrid board has failed (slow slope input).
E311	E411	The low-level of the complement output (differential signal) of the hybrid board has failed (slow slope input).
E312	E412	The high-level of the complement output (differential signal) of the hybrid board has failed (slow slope input).
E313	E413	The low-level of the normal output (differential signal) of the hybrid board has failed (slow slope input).
E350	E450	The adjust value on the EEPROM have been destroyed. Correct slopes and levels are not possible.

Error Code	Configuration Error Message
E500	Dual Channel Instrument Each output board contains a trigger amplifier. The trigger amplifier is required in channel 1 and is not needed in channel 2.
E501	Dual Channel Instrument Neither output board contains trigger amplifier capability.
E502	Single Channel Instrument The output board does not contain trigger amplifier capability.
E504	The Instrument Contains a dual channel timing board but only one output board.

HP 8131A Self-test

Structure

The self-test measures:

- the amplifier hybrid output levels (in disable mode).
- the transducer board output level
- the output board input level

The self-test program can recognize hybrid errors, transducer board errors, and input errors that cause the measured levels to exceed the allowed tolerance band. The following three pages of flow diagrams show the logical route followed by the program to derive particular error displays. These diagrams should assist in locating the cause of a fault.

General

Check at the sense node. Are the voltages are OK? => self test circuit.

Self-test Multiplexer (U108) Voltages

Table 6-7-2. U108 Voltages for First Page of Flow Diagram - NORM

U108 signal	Voltage
ANAS1	-
ANAS2	-2.2 ±0.3 V
ANAS3	+2.2 ±0.3 V
ANAS4	-
ANAS5	0 ±0.7 V
ANAS6	3 ±0.8 V
ANAS7	0.4 ±0.8 V

Table 6-7-3. U108 Voltages for Second Page of Flow Diagram - COMP

U108 signal	Voltage
ANAS1	+2.2 ±0.3 V
ANAS2	-
ANAS3	-
ANAS4	-2.2 ±0.3 V
ANAS5	0 ±0.7 V
ANAS6	0.4 V ±0.8 V
ANAS7	3 V ±0.8 V

Table 6-7-4. U108 Voltages for Third Page of Flow Diagram - THRE = -5 V

U108 signal	Voltage
ANAS1	-
ANAS2	-2.2 ±0.3 V
ANAS3	+2.2 ±0.3 V
ANAS4	-
ANAS5	-2.6 ±1.2 V
ANAS6	3 V ±0.8 V
ANAS7	0.4 ±0.8 V

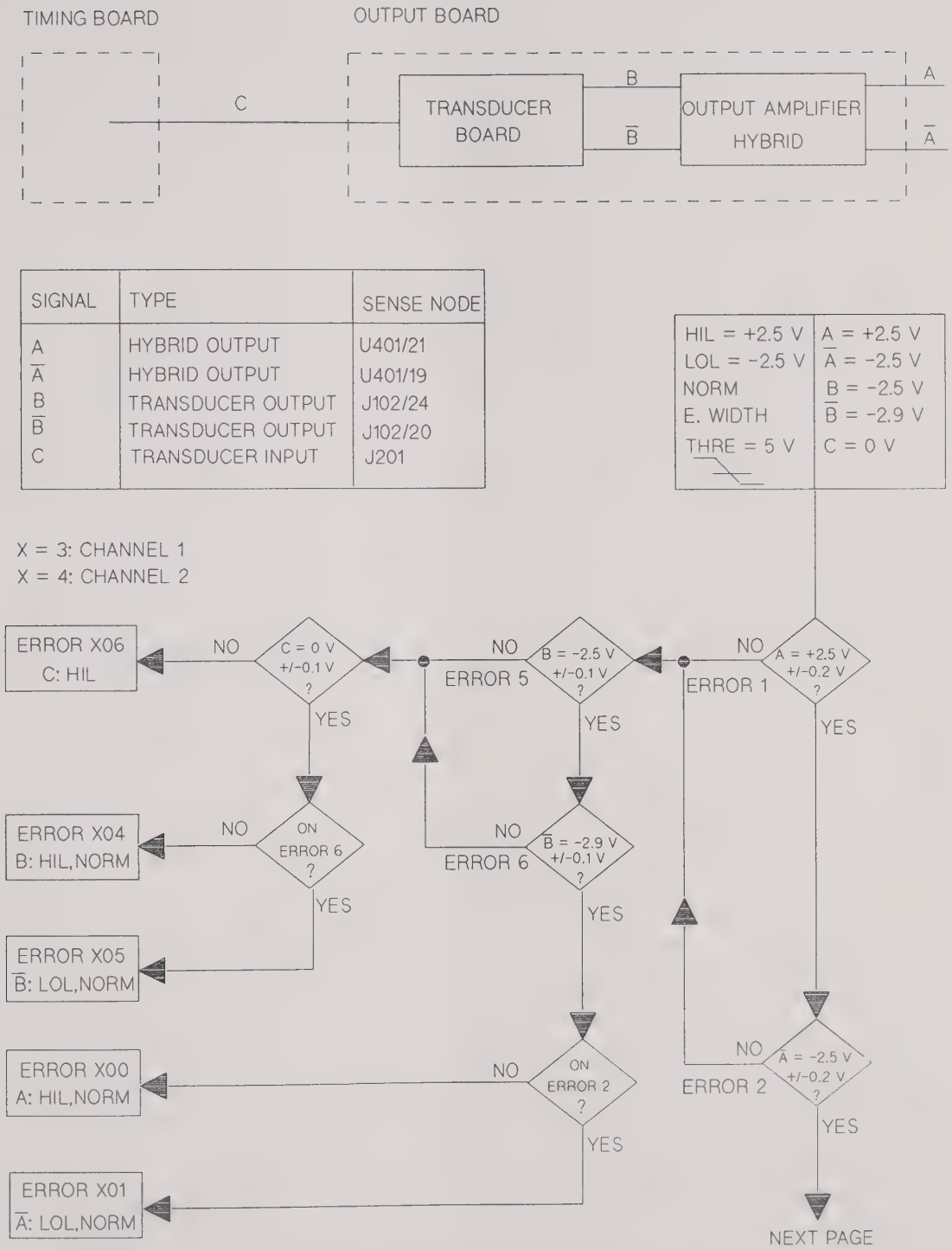

Figure 6-7-5. HP 8131A Flowchart - Part 1

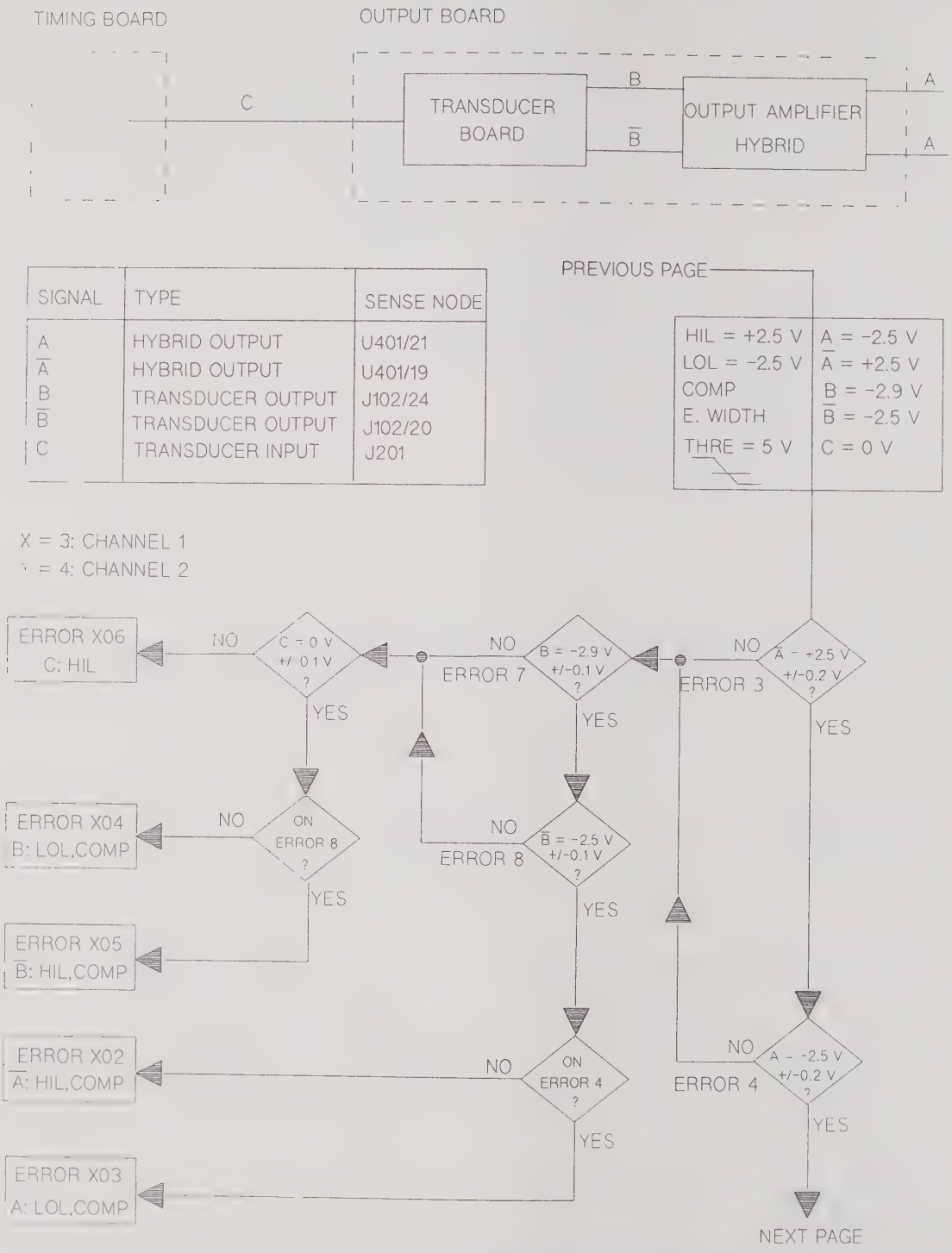

Figure 6-7-6. HP 8131A Flowchart - Part 2

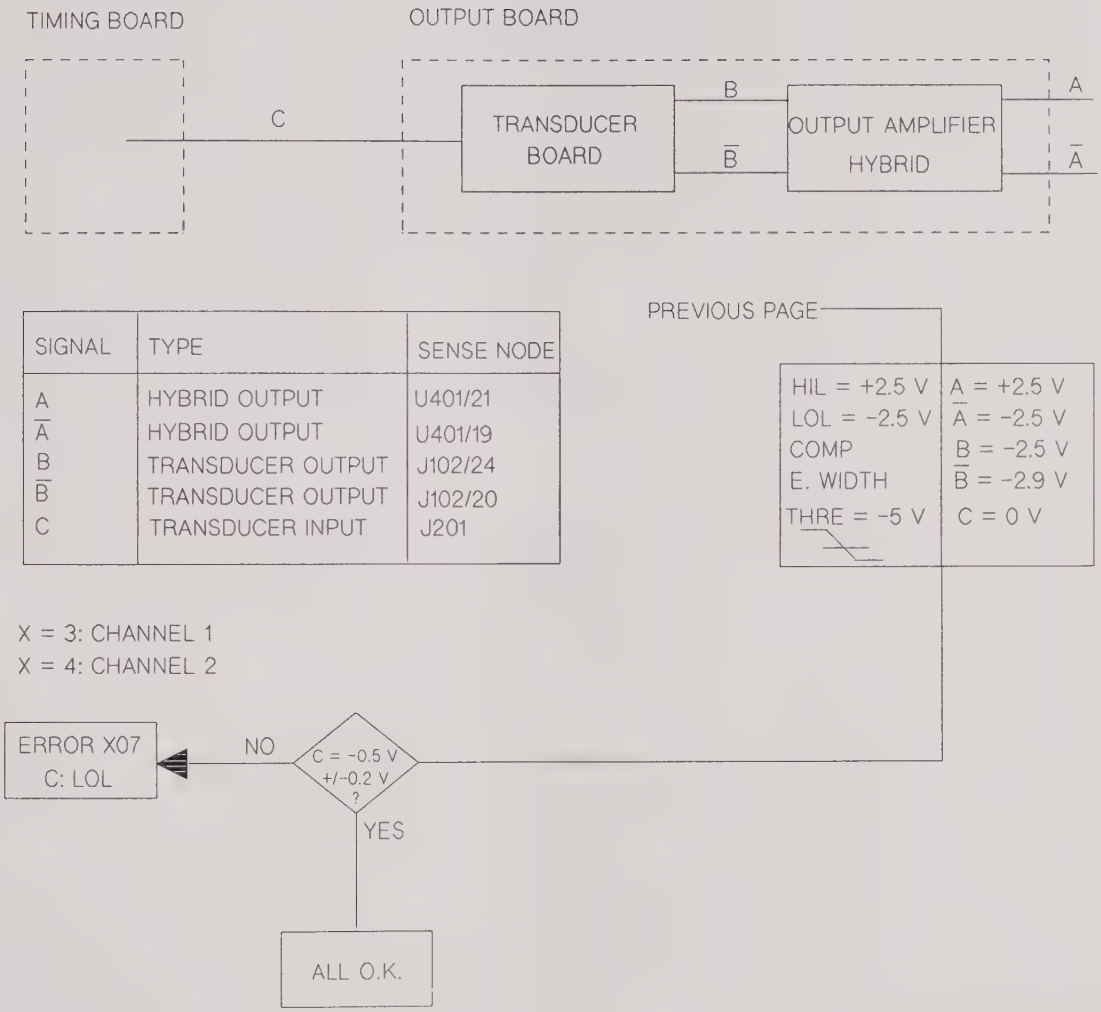

SIGNAL	TYPE	SENSE NODE
A	HYBRID OUTPUT	U401/21
$\overline{A}$	HYBRID OUTPUT	U401/19
B	TRANSDUCER OUTPUT	J102/24
$\overline{B}$	TRANSDUCER OUTPUT	J102/20
C	TRANSDUCER INPUT	J201

Figure 6-7-7. HP 8131A Flowchart - Part 3

Errors

Errors X00 to X03

1. If the instrument functions correctly, but the voltages are wrong: check HIL adjustment and AMP adjustment.
2. Interconnecting frame failing?
3. Damaged pins on mother board connector?
4. Voltages on the hybrid pins are correct (see Table below)?
5. Check to see if ERROR is due to hybrid or circuit board.

Table 6-7-5. Hybrid Pin Voltages

Pin	Mnemonic	Voltage	Pin	Mnemonic	Voltage
1	CB	-4.4 ±0.2 V	2	$\overline{\text{INH}}$	-2.5 ±0.1 V
3	INH	-2.3 ±0.1 V	4	$\overline{\text{VGD}}$	-15.2 ±0.2 V
5	$\overline{\text{ING}}$	-15.2 ±0.2 V	6	$\overline{\text{INF}}$	-15.2 ±0.2 V
7	IP	-15.5 ±0.5 V	8	VAD1	-13 ±1 V
9	VAD2	-13 ±1 V	10	IRP	-6.6 ±0.2 V
11	IRS	-9.2 ±0.2 V	12	IS	-13.7 ±0.5 V
13	VAD4	-13 ±1 V	14	VAD3	-13 ±1 V
15	ID2	-13.8 ±0.5 V	16	ID1	-13.8 ±0.5 V
17	LS	-4.5 ±0.3 V	18	HS	0 ±0.3 V
21	$\overline{\text{OUT}}$	0 ±0.1 V	22	$\overline{\text{HS}}$	0 ±0.3 V
23	$\overline{\text{LS}}$	0 ±0.3 V	24	VD1	-1 ±0.2 V
25	VDS	-5 ±0.2 V	26	VS2	-11 ±0.4 V
27	VS1	-18 ±0.4 V	28	INC	-16.4 ±0.2 V
29	INF	-16.4 ±0.2 V	30	VGD	-16.4 ±0.2 V
31	CS	-5 ±0.2 V	32	VS3	-15 ±0.5 V

Errors X04 and X05

Check transducer board pins.

Errors X06 and X07

1. Check that the timing cable is correctly connected.
2. Check timing board.

Error Messages

The HP 8131A carries out its self-test at power-on. During this series of tests all the front panel LEDs are lit. If an error is detected an error message is indicated on the front panel display.

The first digit (left-hand side) of the error display is a letter:

- **F** - displayed indicates a FATAL ERROR; the HP 8131A ceases operation
- **E** - displayed indicates a MINOR ERROR; the HP 8131A continues to function with some restrictions. These restrictions are dependent on the type of fault.

The second digit has the following significance:

- **1** - indicates an error on the CPU board
- **2** - indicates an error on the timing board
- **3** - indicates an error on the output board 1
- **4** - indicates an error on the output board 2
- **5** - indicates a configuration error.

The third and forth digits provide information about the exact fault.

Fatal Error Messages

Table 6-7-6. Power-On Self-Test Errors

Error Code	CPU Board Error Message
F100	Static RAM (number 2) error
F101	Static RAM (number 1) error
F102	EPROM (number 2) error
F103	EPROM (number 1) error
F104	Timer cycle error
F105	Keyboard controller error
F106	Device bus error
F500	Configuration error An incorrect combination of timing and output boards has been installed in the instrument.

Minor Error Messages

Error Code	Timing Board Error Message
E200	The adjust values on the EEPROM have been destroyed. Correct parametric timing is not possible.

Channel 1 Error Code	Channel 2 Error Code	Output Board Error Message
E300	E400	OUTPUT channel: polarity error (normal path) on the output board.
E301	E401	OUTPUT channel: polarity error (complement path) on the output board.
E302	E402	$\overline{\text{OUTPUT}}$ channel: polarity error (complement path) on the output board.
E303	E403	$\overline{\text{OUTPUT}}$ channel: polarity error (normal path) on the output board.
E304	E404	OUTPUT/$\overline{\text{OUTPUT}}$ channel: polarity error on the transducer board.
E305	E405	OUTPUT/$\overline{\text{OUTPUT}}$ channel: polarity error (complement path) on the transducer board.
E306	E406	Polarity error at the input to the transducer board.
E307	E407	Polarity error at the input to the transducer board.

Error Code	Configuration Error Message
E500	Dual Channel Instrument Each output board contains a transducer. The transducer is required in channel 1 and is not needed in channel 2.
E501	Dual Channel Instrument Neither output board has a transducer board.
E502	Single Channel Instrument The output board does not have a transducer board.
E504	The Instrument Contains a dual channel timing board but only one output board.

A

Sales and Service Offices

Information

Hewlett-Packard products are sold and supported worldwide through local HP Offices.

To contact the closest sales and service office, check your telephone directory, or contact one of the Headquarters listed below.

Asia

Hewlett-Packard Asia Ltd.
22/F, Bond Center
West Tower, 89 Queensway, Central, **Hong Kong**
G.P.O. Box 863, Hong Kong
Telephone: 5-848 7777, Telex: 76793 HPA HX, Cable: HPASIAL TD

Canada

Hewlett-Packard (Canada) Ltd.
6877 Goreway Drive, **Mississauga**, Ontario L4V 1M8, Canada
Telephone: (416) 678-9430, Telex: 069-8644, Fax: (416) 678-9421

Eastern Europe

Hewlett-Packard Ges.m.b.H
Lieblgasse 1
P.O. Box 72, A-1222 **Vienna**, Austria
Telephone: (222) 2500-0, Telex: 13 4425 HEPA A

Northern Europe

Hewlett-Packard S.A.
V.D. Hooplaan 241
P.O. Box 999, NL-118 LN 15 **Amstelveen**, The Netherlands
Telephone: 20 547 9999, Telex: 189 19 hpner

South East Europe

Hewlet-Packard S.A.
World Trade Center
110 Avenue Louis-Casai, 1215 Cointrin **Geneva**, Switzerland
Telephone: (022) 98 96 51, Telex: 27225 hpser

Mail Address:
P.O. Box CH-1217 Meyrin 1, **Geneva**, Switzerland

Middle East and Central Africa

Hewlett-Packard S.A.
International Sales Branch
Middle East/Central Africa Sales H.Q.
7, Rue du Bois-du-Lan
P.O. Box 364, CH-1217 Meyrin 1, **Geneva**, Switzerland
Telephone: (022) 83 12 12, Telex: 27835 hmea, Cable: HEWPACKSA Geneve, Fax: 783 7535

European Operations
Hewlett-Packard S.A.
150, Route du Nante d'Avril
CH-1217 Meyrin 2 **Geneva**, Switzerland
Telephone: (41/22) 780.8111, Fax: 780 8542

United Kingdom

Hewlett-Packard Ltd.
Nine Mile Ride, **Wokingham**, Berkshire, RG11 3LL
Telephone: 0344 773 100, Telex: 848805, Fax: (44/344) 763526

United States of America

Customer Information Center
(800) 752-0900
6.00AM to 5PM Pacific Time

Eastern USA

Hewlett-Packard Co.
4 Choke Cherry Road, **Rockville**, MD 20850
Telephone: (301) 670-4300

Midwestern USA

Hewlett-Packard Co.
5201 Tollview Drive, **Rolling Meadows**, IL 60008
Telephone (312) 255-9800

Southern USA

Hewlett-Packard Co.
2015 South Park Place, **Atlanta**, GA 30339
Telephone: (404) 955-1500

Western USA

Hewlett-Packard Co.
5161 Lankershim Boulevard, **North Hollywood**, CA 91601
Telephone: (818) 505-5600

Other International Areas

Hewlett-Packard Co.
Intercontinental Headquarters
3495 Deer Creek Road, **Palo Alto**, CA 94304
Telephone: (415) 857-5027, Telex: 034-8300, Cable: HEWPACK

Hewlett-Packard Trading S.A.
Bureau de Liaison/Bureau de Support
Ville des Lions, 9, Hai Galloul. **DZ-BORDJ EL BAHRI**
Telephone: 76 02 07, Fax: 281 0387

B

HP 8130A Parts Lists

Introduction

The parts lists are divided into two groups:

1. A parts list for the standard instrument, followed by a parts lists for each of the electrical assemblies within it.
2. A parts list for the two-channel instrument (Option 020) listing the additional/alternative parts fitted, followed by a parts list for each of the additional/alternative electrical assemblies.

The parts in each list are listed by reference designator.

Reference Designators

Reference designators are alphanumeric names for parts. Examples are given below.

1. A1 = electrical assembly number 1
2. MP1 = mechanical part number 1
3. A5R9 = resistor 9 on assembly 5

Parts Information

The following information is provided for each part in the parts list table:

1. Reference Designator
2. HP Part Number
3. CD = Check Digit
4. Description
5. Manufacturer's reference number. Table B-1 lists the manufacturers' names against their reference numbers.
6. Manufacturer's part number

Ordering Information

Parts are ordered from the nearest Hewlett-Packard Sales and Support Office.

A Sales and Support Office Directory is provided in Appendix A of this manual.

1. Provide the following information when ordering parts listed in the parts table.
   a. Reference Designator
   b. Hewlett-Packard part number
   c. Check Digit
   d. Quantity required.
2. Provide the following information when ordering parts not listed in the parts table.
   a. Instrument model number
   b. Instrument serial number
   c. A physical description of the part
   d. A functional description of the part
   e. Quantity required.

Table B-1. HP 8130A Parts Manufacturers

Reference	Name
00039	NEC ELECTRONICS INC
00046	UNITRODE CORP
00075	ARIZONA COIL INC
00359	O'HARA METAL PRODUCTS CO
00493	UNITED CHEMI-CON INC
00746	ROHM CORP
01074	HOLSWORTHY ELECTRONICS LTD
01125	LEWIS SCREW CO
01339	GETTIG ENGRG & MFG CO INC
01380	AMP INC
01417	NEL FREQUENCY CONTROLS INC
01486	MABI CO THE
01542	HP DIV 01 SAN JOSE COMPONENTS
01607	ALLEN-BRADLEY CO INC
01698	TEXAS INSTRUMENTS INC
01850	AROMAT CORP
02010	AVX CORP
02037	MOTOROLA INC
02062	HP DIV 05 MSD
02121	LYN-TRON INC
02170	AMATOM ELEK HARDWARE DIV OF MITE
02414	BURNDY CORP
02419	CELLOTAPE INC
02483	CTS CORP
02499	IRC INC
02531	CHICAGO RIVET & MACHINE CO
02608	THERMALLOY INC
02805	COOPER INDUSTRIES INC
02883	SILICONIX INC
02910	SIGNETICS CORP
02946	DUPONT E I DE NEMOURS & CO
02995	NORTH AMERICAN PHILIPS CORP
03000	AVDEL DIV OF NEWMAN IND LTD
03038	INTL RECTIFIER CORP
03232	PRODUCT COMPONENT CORP
03273	GOWANDA ELECTRONICS CORP
03285	ANALOG DEVICES INC
03394	METHODE ELECTRONICS INC
03406	NATIONAL SEMICONDUCTOR CORP
03418	MOLEX INC
03647	INSTRUMENT SPECIALTIES CO INC
03744	BOURNS INC
03799	HARRIS CORP
03811	INTEL CORP
03981	PENN ENGINEERING & MFG CORP
04129	ARIES ELECTRONICS INC
04147	FLUOROCARBON CO THE
04200	SPRAGUE ELECTRIC CO
04225	THOMAS & BETTS CORP
04486	ITT CORP
04703	LITTELFUSE INC
04726	3M CO
04880	ZIERICK MFG CO
04939	SCHNITZER ALLOY PRODUCTS CO
05098	VICTORY ENGINEERING CORP
05447	BERGQUIST CO
05524	DALE ELECTRONICS INC
05610	CAMCAR SCREW & MFG CO
05769	ITT SEALECTRO CORP
05879	AMPHENOL CORPORATION
05947	ASSMANN F W UND SOEHNE
06113	HIPP ESSLINGEN
06118	ROEDERSTEIN/RESISTA GMBH
06121	SIEMENS AG
06137	HANS KOLB WELLPAPPENWERKE
06313	WOELCO
06352	TDK CORPORATION OF AMERICA
06354	TOSHIBA CORP
06653	KLAR
06665	SAMTEC

Table B-1. HP 8130A Parts Manufacturers (continued)

Reference	Name
06691	HOUSE OF METRICS LTD
07029	R BLESSING
08623	WOLFLE & CO
08674	FELLER AND NEUMAYER
08709	PANASONIC INDUSTRIAL CO
09538	TUSONIX
09809	MATSUSHITA ELECTRIC WORKS LTD
09922	SHIN-ETSU POLYMER CO LTD
10194	PAP-O-PHAN
10358	VOGT AG
10385	WACKER GMBH
10572	XICOR, INC
10803	ADVANCED INTERCONNECT
10858	LINEAR TECHNOLOGY CORP
11192	HEYCO MOLDED PRODUCTS GMBH
11808	KITAGAWA INDUSTRIES CO LTD
28480	HEWLETT PACKARD COMPANY

Master List

Table B-2. 8130A Standard Instrument Parts List

Reference	HP Part #	CD	Qty	Description	Manuf'r	Part #
A0 A1	08130-66501	3	1	BD AY KEY STD	28480	08130-66501
A0 A2	08131-66502	5	1	BD AY MOTHER	28480	08131-66502
A0 A3	08130-66503	5	1	BD AY UPCR	28480	08130-66503
A0 A4	08131-66504	7	1	BD AY PWR CTL	28480	08131-66504
A0 A5	08130-66505	7	1	BD AY TIMING STD	28480	08130-66505
A0 A14	08131-66514	9	1	BD AY PWR MAIN	28480	08131-66514
A0 A26	08130-66526	2	1	BD AY CHAN 1	28480	08130-66526
A0 F1	2110-0304	4	1	FUSE 1.5A 250V	02805	MDX-1-1/2A
A0 F1	2110-0029	0	1	FUSE 3A 250V	02805	
A0 MP1	08130-00101	1	1	CHASSIS MAIN	28480	08130-00101
A0 MP2	08131-00111	4	1	ANGLE PWR	28480	08131-00111
A0 MP3	08130-00202	3	1	SUB PANEL	28480	08130-00202
A0 MP4	08130-00203	4	1	REAR PANEL	28480	08130-00203
A0 MP5	08131-01212	8	1	BRKT FAN	28480	08131-01212
A0 MP6	08130-04101	9	1	CVR TOP CARD CAGE	28480	08130-04101
A0 MP7	08131-04102	1	1	CVR TOP CABINET	28480	08131-04102
A0 MP8	08131-04103	2	1	CVR TOP INSTRUMEN	28480	08131-04103
A0 MP9	08131-04107	6	2	BOARD-KEEPER	28480	08131-04107
A0 MP10	08131-04501	4	1	CARD CAGE	28480	08131-04501
A0 MP11	08131-05402	6	1	INSULATOR,BOTT	28480	08131-05402
A0 MP13	08130-40204	9	1	PANEL FRONT ST	28480	08130-40204
A0 MP14	08131-60110	9	1	CAGE AY PWR	28480	08131-60110
A0 MP15	08131-68502		1	FAN AY	28480	08131-68502
A0 MP16	08180-47401	2	1	KEY CAP	28480	08180-47401
A0 MP19	1460-1345	5	2	TILT STAND	00359	
A0 MP20	5001-0539	9	2	SIDE TRIM	28480	5001-0539
A0 MP21	5021-5804	3	1	FRAME REAR 132	28480	5021-5804
A0 MP22	5021-5837	2	4	STRUT CRNR 437	28480	5021-5837
A0 MP23	5021-8403	4	1	FRAME FRNT 132	28480	5021-8403
A0 MP24	5040-0478	7	2	SLEEVE-BLUE	28480	5040-0478
A0 MP25	5040-9319	3	1	SHAFT PWR SWITC	28480	5040-9319
A0 MP26	5041-8801	8	4	FOOT	28480	5041-8801

Table B-2. 8130A Standard Instrument Parts List (continued)

Reference	HP Part #	CD	Qty	Description	Manuf'r	Part #
A0 MP27	5041-8802	9	1	TRIM STRIP TOP	28480	5041-8802
A0 MP28	5041-8819	8	1	STP HNDL FRNT	28480	5041-8819
A0 MP29	5041-8820	1	1	STP HNDL REAR	28480	5041-8820
A0 MP30	5041-8821	2	4	FOOT REAR	28480	5041-8821
A0 MP31	5062-3704	4	1	STRAP HNDL 497	28480	5062-3704
A0 MP32	5062-3747	5	1	CVR BOTTOM 497	28480	5062-3747
A0 MP33	5062-3812	5	1	COVER SIDE PERF	28480	5062-3812
A0 MP34	5062-3837	4	1	COVER SIDE PERF	28480	5062-3837
A0 MP36	7120-6153	9	1	LABEL-WARNING	06653	
A0 MP37	0363-0125	0	2	RFI STRP-FINGERS	03647	97-555
A0 MP38	0363-0170	5	1	RFI STRP-FINGERS	03647	97-520-A
A0 MP39	8160-0392	1	1	RFI STRP-FINGERS	03647	97-500-SNPB
A0 MP100	08131-00602	8	1	SHIELD	28480	08131-00602
A0 MP210	08131-21104	9	1	H-SINK	28480	08131-21104
A0 MP214	0340-0433	5	1	INSUL-FLG-BSHG	03232	
A0 MP215	0340-1212	0	1	INSULATOR	28480	0340-1212
A0 S1	3101-2992	2	1	SW 4A/80A 250V	04486	
A0 T1	9100-4739	3	1	XFMR BV382149B	28480	9100-4739
A0 W1	5180-2462	9	1	CBL HP-IB	28480	5180-2462
A0 W3	08130-61604	7	1	CBL AY TRIG OUT	28480	08130-61604
A0 W5	08130-61605	8	1	CBL AY EXT INP	28480	08130-61605
A0 W10	08130-61603	6	1	CBL AY OUTPUT	28480	08130-61603
A0 W11	08130-61603	6	1	CBL AY OUTPUT	28480	08130-61603

Table B-3. 8130A Standard Keyboard Parts List

Reference	HP Part #	CD	Qty	Description	Manuf'r	Part #
A1	08130-66501	3	1	BD AY KEY STD	28480	08130-66501
A1 C2	0160-6623	5	1	CAP 0.1uF 50 V	02010	SA115C104MAAH
A1 C3	0160-6623	5	1	CAP 0.1uF 50 V	02010	SA115C104MAAH
A1 C4	0160-6623	5	1	CAP 0.1uF 50 V	02010	SA115C104MAAH
A1 CP1	0180-2207	5	1	CAP 100uF 10 V	04200	150D107X9010R2-DYS
A1 DS1	1990-1253	7	1	DISPLAY-NUM-SEG	01542	HDSP-H101
A1 DS2	1990-1253	7	1	DISPLAY-NUM-SEG	01542	HDSP-H101
A1 DS3	1990-1253	7	1	DISPLAY-NUM-SEG	01542	HDSP-H101
A1 DS4	1990-1253	7	1	DISPLAY-NUM-SEG	01542	HDSP-H101
A1 DS5	1990-1252	6	1	LED-LT BAR	01542	HLCP-B100
A1 DS6	1990-1278	6	1	LED-LMP	01542	HLMP-K155
A1 DS7	1990-1278	6	1	LED-LMP	01542	HLMP-K155
A1 DS8	1990-1254	8	1	LED-LMP	01542	HLMP-Q150 SELECTED
A1 DS10	1990-1254	8	1	LED-LMP	01542	HLMP-Q150 SELECTED
A1 DS11	1990-1254	8	1	LED-LMP	01542	HLMP-Q150 SELECTED
A1 DS12	1990-1254	8	1	LED-LMP	01542	HLMP-Q150 SELECTED
A1 DS13	1990-1254	8	1	LED-LMP	01542	HLMP-Q150 SELECTED
A1 DS14	1990-1254	8	1	LED-LMP	01542	HLMP-Q150 SELECTED
A1 DS15	1990-1254	8	1	LED-LMP	01542	HLMP-Q150 SELECTED
A1 DS16	1990-1254	8	1	LED-LMP	01542	HLMP-Q150 SELECTED
A1 DS17	1990-1254	8	1	LED-LMP	01542	HLMP-Q150 SELECTED
A1 DS18	1990-1254	8	1	LED-LMP	01542	HLMP-Q150 SELECTED
A1 DS19	1990-1254	8	1	LED-LMP	01542	HLMP-Q150 SELECTED
A1 DS21	1990-1278	6	1	LED-LMP	01542	HLMP-K155
A1 DS22	1990-1278	6	1	LED-LMP	01542	HLMP-K155
A1 DS24	1990-1278	6	1	LED-LMP	01542	HLMP-K155
A1 DS27	1990-1278	6	1	LED-LMP	01542	HLMP-K155
A1 DS28	1990-1278	6	1	LED-LMP	01542	HLMP-K155

Table B-3. 8130A Standard Keyboard Parts List (continued)

Reference	HP Part #	CD	Qty	Description	Manuf'r	Part #
A1 DS51	1990-1278	6	1	LED-LMP	01542	HLMP-K155
A1 DS52	1990-1278	6	1	LED-LMP	01542	HLMP-K155
A1 DS53	1990-1278	6	1	LED-LMP	01542	HLMP-K155
A1 DS55	1990-1278	6	1	LED-LMP	01542	HLMP-K155
A1 DS56	1990-1278	6	1	LED-LMP	01542	HLMP-K155
A1 DS57	1990-1278	6	1	LED-LMP	01542	HLMP-K155
A1 DS61	1990-1254	8	1	LED-LMP	01542	HLMP-Q150 SELECTED
A1 DS62	1990-1254	8	1	LED-LMP	01542	HLMP-Q150 SELECTED
A1 DS63	1990-1254	8	1	LED-LMP	01542	HLMP-Q150 SELECTED
A1 DS64	1990-1254	8	1	LED-LMP	01542	HLMP-Q150 SELECTED
A1 DS65	1990-1278	6	1	LED-LMP	01542	HLMP-K155
A1 DS71	1990-1278	6	1	LED-LMP	01542	HLMP-K155
A1 DS72	1990-1278	6	1	LED-LMP	01542	HLMP-K155
A1 DS73	1990-1278	6	1	LED-LMP	01542	HLMP-K155
A1 DS74	1990-1278	6	1	LED-LMP	01542	HLMP-K155
A1 DS75	1990-1278	6	1	LED-LMP	01542	HLMP-K155
A1 DS76	1990-1278	6	1	LED-LMP	01542	HLMP-K155
A1 DS77	1990-1278	6	1	LED-LMP	01542	HLMP-K155
A1 DS81	1990-1278	6	1	LED-LMP	01542	HLMP-K155
A1 DS82	1990-1278	6	1	LED-LMP	01542	HLMP-K155
A1 DS83	1990-1278	6	1	LED-LMP	01542	HLMP-K155
A1 DS84	1990-1278	6	1	LED-LMP	01542	HLMP-K155
A1 J1	1252-0217	7	1	CONN-POST-TP-HDR	04726	3429-5202
A1 MP1	5041-4707	5	8	QTR COBLK	28480	5041-4707
A1 MP2	5041-0318	6	5	LK CAP PTY GRAY	28480	5041-0318
A1 MP3	5041-0309	5	5	CAP KEY QUARTER	28480	5041-0309
A1 MP4	5041-0507	5	1	QTR WGRN	28480	5041-0507
A1 MP5	5041-0726	0	1	KEY CAP LCL	28480	5041-0726
A1 MP6	1200-0654	7	1	SKT-IC 40-CONT	01380	2-641606-1
A1 MP7	1200-0899	2	1	SKT-STRP 8-CONT	04129	8-0511-10

Table B-3. 8130A Standard Keyboard Parts List (continued)

Reference	HP Part #	CD	Qty	Description	Manuf'r	Part #
A1 RA1	1810-0325	2	1	NETWORK-RES DIP	02483	761-3-R150
A1 RA2	1810-0338	7	1	NETWORK-RES DIP	02483	761-3-R100
A1 RA3	1810-0338	7	1	NETWORK-RES DIP	02483	761-3-R100
A1 RA4	1810-0275	1	1	NETWORK-RES SIP	02483	750-101
A1 RA5	1810-0275	1	1	NETWORK-RES SIP	02483	750-101
A1 S1	5060-9436	7	1	SW-PB SPST NO	04486	5560-9436
A1 S2	5060-9436	7	1	SW-PB SPST NO	04486	5560-9436
A1 S3	5060-9436	7	1	SW-PB SPST NO	04486	5560-9436
A1 S4	5060-9436	7	1	SW-PB SPST NO	04486	5560-9436
A1 S5	5060-9436	7	1	SW-PB SPST NO	04486	5560-9436
A1 S6	5060-9436	7	1	SW-PB SPST NO	04486	5560-9436
A1 S7	5060-9436	7	1	SW-PB SPST NO	04486	5560-9436
A1 S8	5060-9436	7	1	SW-PB SPST NO	04486	5560-9436
A1 S20	5060-9436	7	1	SW-PB SPST NO	04486	5560-9436
A1 S21	5060-9436	7	1	SW-PB SPST NO	04486	5560-9436
A1 S22	5060-9436	7	1	SW-PB SPST NO	04486	5560-9436
A1 S23	5060-9436	7	1	SW-PB SPST NO	04486	5560-9436
A1 S24	5060-9436	7	1	SW-PB SPST NO	04486	5560-9436
A1 S25	5060-9436	7	1	SW-PB SPST NO	04486	5560-9436
A1 S26	5060-9436	7	1	SW-PB SPST NO	04486	5560-9436
A1 S27	5060-9436	7	1	SW-PB SPST NO	04486	5560-9436
A1 S28	5060-9436	7	1	SW-PB SPST NO	04486	5560-9436
A1 S29	5060-9436	7	1	SW-PB SPST NO	04486	5560-9436
A1 S41	5060-9436	7	1	SW-PB SPST NO	04486	5560-9436
A1 S42	5060-9436	7	1	SW-PB SPST NO	04486	5560-9436
A1 S43	5060-9436	7	1	SW-PB SPST NO	04486	5560-9436
A1 S44	5060-9436	7	1	SW-PB SPST NO	04486	5560-9436
A1 S45	5060-9436	7	1	SW-PB SPST NO	04486	5560-9436
A1 S46	5060-9436	7	1	SW-PB SPST NO	04486	5560-9436
A1 S47	5060-9436	7	1	SW-PB SPST NO	04486	5560-9436

Table B-3. 8130A Standard Keyboard Parts List (continued)

Reference	HP Part #	CD	Qty	Description	Manuf'r	Part #
A1 S48	5060-9436	7	1	SW-PB SPST NO	04486	5560-9436
A1 S51	5060-9436	7	1	SW-PB SPST NO	04486	5560-9436
A1 S52	5060-9436	7	1	SW-PB SPST NO	04486	5560-9436
A1 S53	5060-9436	7	1	SW-PB SPST NO	04486	5560-9436
A1 S54	5060-9436	7	1	SW-PB SPST NO	04486	5560-9436
A1 U1	1820-3847	0	1	IC-MM74HCT138N	01698	SN74HCT138N
A1 U2	1820-3847	0	1	IC-MM74HCT138N	01698	SN74HCT138N
A1 U3	1820-3847	0	1	IC-MM74HCT138N	01698	SN74HCT138N
A1 U4	1820-3456	7	1	IC-MM74HCT244N	01698	SN74HCT244N
A1 U5	1820-3456	7	1	IC-MM74HCT244N	01698	SN74HCT244N
A1 U6	1858-0014	6	1	XSTR ARY 14P-DIP	02037	
A1 U7	1858-0014	6	1	XSTR ARY 14P-DIP	02037	
A1 U8	1858-0014	6	1	XSTR ARY 14P-DIP	02037	
A1 U9	1858-0014	6	1	XSTR ARY 14P-DIP	02037	

Motherboard

Table B-4. 8130A Motherboard Parts List

Reference	HP Part #	CD	Qty	Description	Manuf'r	Part #
A2	08131-66502	5	1	BD AY MOTHER	28480	08131-66502
A2 J1	1251-8320	7	1	CONN-POST-TP-SKT	04225	FC064-031-2
A2 J2	1251-8320	7	1	CONN-POST-TP-SKT	04225	FC064-031-2
A2 J3	1251-8320	7	1	CONN-POST-TP-SKT	04225	FC064-031-2
A2 J4	1251-8320	7	1	CONN-POST-TP-SKT	04225	FC064-031-2
A2 J5	1251-8320	7	1	CONN-POST-TP-SKT	04225	FC064-031-2
A2 J6	1252-0027	7	1	CONN-POST-TP-SKT	05879	706-C143-CO96F-23A-204
A2 MP11	8160-0392	1		RFI STRP-FINGERS	03647	97-500-SNPB
A2 MP12	8160-0392	1		RFI STRP-FINGERS	03647	97-500-SNPB
A2 MP13	8160-0392	1		RFI STRP-FINGERS	03647	97-500-SNPB
A2 MP14	8160-0392	1		RFI STRP-FINGERS	03647	97-500-SNPB
A2 U1	1826-0760	2	1	IC 335	03406	LM335AZ
A2 W1	08131-61601	5	1	CBL CONN KEY	28480	08131-61601

Table B-5. 8130A Microprocessorboard Parts List

Reference	HP Part #	CD	Qty	Description	Manuf'r	Part #
A3	08130-66503	5	1	BD AY-UPCR	28480	08130-66503
A3 BT100	1420-0273	2	1	BAT 3V	08709	BR-2/3AT2P
A3 C3	0160-5746	1	1	CAP 0.1uF 50 V	06121	B37987-T5104-M11
A3 C4	0160-5746	1	1	CAP 0.1uF 50 V	06121	B37987-T5104-M11
A3 C100	0160-6623	5	1	CAP 0.1uF 50 V	02010	SA115C104MAAH
A3 C101	0160-6623	5	1	CAP 0.1uF 50 V	02010	SA115C104MAAH
A3 C102	0160-6623	5	1	CAP 0.1uF 50 V	02010	SA115C104MAAH
A3 C103	0160-6623	5	1	CAP 0.1uF 50 V	02010	SA115C104MAAH
A3 C104	0160-6623	5	1	CAP 0.1uF 50 V	02010	SA115C104MAAH
A3 C105	0160-6623	5	1	CAP 0.1uF 50 V	02010	SA115C104MAAH
A3 C106	0160-6623	5	1	CAP 0.1uF 50 V	02010	SA115C104MAAH
A3 C107	0160-6623	5	1	CAP 0.1uF 50 V	02010	SA115C104MAAH
A3 C202	0160-6623	5	1	CAP 0.1uF 50 V	02010	SA115C104MAAH
A3 C203	0160-6623	5	1	CAP 0.1uF 50 V	02010	SA115C104MAAH
A3 C204	0160-6623	5	1	CAP 0.1uF 50 V	02010	SA115C104MAAH
A3 C205	0160-6623	5	1	CAP 0.1uF 50 V	02010	SA115C104MAAH
A3 C301	0160-6623	5	1	CAP 0.1uF 50 V	02010	SA115C104MAAH
A3 C302	0160-6623	5	1	CAP 0.1uF 50 V	02010	SA115C104MAAH
A3 C303	0160-6623	5	1	CAP 0.1uF 50 V	02010	SA115C104MAAH
A3 C304	0160-6623	5	1	CAP 0.1uF 50 V	02010	SA115C104MAAH
A3 C400	0160-6623	5	1	CAP 0.1uF 50 V	02010	SA115C104MAAH
A3 C401	0160-6623	5	1	CAP 0.1uF 50 V	02010	SA115C104MAAH
A3 C402	0160-6623	5	1	CAP 0.1uF 50 V	02010	SA115C104MAAH
A3 C404	0160-6623	5	1	CAP 0.1uF 50 V	02010	SA115C104MAAH
A3 C406	0160-6623	5	1	CAP 0.1uF 50 V	02010	SA115C104MAAH
A3 C408	0160-6623	5	1	CAP 0.1uF 50 V	02010	SA115C104MAAH

Table B-5. 8130A Microprocessorboard Parts List (continued)

Reference	HP Part #	CD	Qty	Description	Manuf'r	Part #
A3 C409	0160-6623	5	1	CAP 0.1uF 50 V	02010	SA115C104MAAH
A3 C410	0160-6623	5	1	CAP 0.1uF 50 V	02010	SA115C104MAAH
A3 C500	0160-6623	5	1	CAP 0.1uF 50 V	02010	SA115C104MAAH
A3 C501	0160-6623	5	1	CAP 0.1uF 50 V	02010	SA115C104MAAH
A3 C504	0160-6623	5	1	CAP 0.1uF 50 V	02010	SA115C104MAAH
A3 C505	0160-6623	5	1	CAP 0.1uF 50 V	02010	SA115C104MAAH
A3 C506	0160-6623	5	1	CAP 0.1uF 50 V	02010	SA115C104MAAH
A3 CP1	0180-2207	5	1	CAP 100uF 10 V	04200	150D107X9010R2-DYS
A3 CP2	0180-2207	5	1	CAP 100uF 10 V	04200	150D107X9010R2-DYS
A3 CR200	1901-0535	9	1	DIO- SCHOTTKY SM	02062	50825511
A3 CR400	1901-0535	9	1	DIO- SCHOTTKY SM	02062	50825511
A3 CR401	1901-0535	9	1	DIO- SCHOTTKY SM	02062	50825511
A3 DS100	1990-0485	5	1	LED-LMP	01542	HLMP-1503
A3 J1	1251-8324	1	1	CONN-POST-TP-HDR	04486	G06M96P4BEBL-004-715
A3 J2	1252-1979	0	1	CONN-POST-TP-HDR	04726	3627-5202
A3 J400	1251-4682	6	1	CONN-POST-TP-HDR	03394	1102-1-103-02
A3 J501	1251-7745	8	1	CONN-POST-TP-HDR	03418	22-12-2024
A3 L1	9100-3139	5	1	L 75UH +-15%	00075	
A3 MP5	1200-0654	7	1	SKT-IC 40-CONT	01380	2-641606-1
A3 MP6	1200-0654	7	1	SKT-IC 40-CONT	01380	2-641606-1
A3 MP7	1200-0654	7	1	SKT-IC 40-CONT	01380	2-641606-1
A3 MP8	1200-0567	1	1	SKT-IC 28-CONT	01380	2-641605-1
A3 MP9	1200-0567	1	1	SKT-IC 28-CONT	01380	2-641605-1
A3 MP10	1400-0824	7	1	STRAP-CABLE	04225	TY-23M
A3 Q100	1854-0583	6	1	XSTR NPN SI	02037	MPS-A18
A3 Q200	1853-0281	9	1	XSTR PNP 2N2907A	02037	2N2907A
A3 R100	0757-0449	6	1	RES 20K 1% .125W	00746	CRB14 OR CRB25
A3 R101	0698-3161	9	1	RES 38.3K 1% .12	00746	CRB14 OR CRB25
A3 R102	0757-0407	6	1	RES 200 1% .125W	00746	CRB14 OR CRB25
A3 R200	0698-3156	2	1	RES 14.7K 1% .12	00746	CRB14 OR CRB25

Table B-5. 8130A Microprocessorboard Parts List (continued)

Reference	HP Part #	CD	Qty	Description	Manuf'r	Part #
A3 R201	0757-0419	0	1	RES 681 1% .125W	00746	CRB14 OR CRB25
A3 R202	0757-0280	3	1	RES 1K 1% .125W	00746	CRB14 OR CRB25
A3 R203	8159-0005	0	1	RES-ZERO OHMS	01339	L-2007-1
A3 R204	0757-0394	0	1	RES 51.1 1% .125	00746	CRB14 OR CRB25
A3 R206	8159-0005	0	1	RES-ZERO OHMS	01339	L-2007-1
A3 R400	0757-0394	0	1	RES 51.1 1% .125	00746	CRB14 OR CRB25
A3 R401	0757-0394	0	1	RES 51.1 1% .125	00746	CRB14 OR CRB25
A3 R500	8159-0005	0	1	RES-ZERO OHMS	01339	L-2007-1
A3 RA100	1810-0243	3	1	NETWORK-RES DIP	02483	761-3-R6.8K
A3 RA101	1810-0503	8	1	NETWORK-RES DIP	02483	761-3-R3.3K
A3 RA200	1810-0316	1	1	NETWORK-RES DIP	02483	761-3-R10K
A3 RA201	1810-0316	1	1	NETWORK-RES DIP	02483	761-3-R10K
A3 RA300	1810-0316	1	1	NETWORK-RES DIP	02483	761-3-R10K
A3 RA301	1810-0316	1	1	NETWORK-RES DIP	02483	761-3-R10K
A3 RA400	1810-0470	8	1	NETWORK-RES DIP	02483	761-3-R2.2K
A3 RA401	1810-0316	1	1	NETWORK-RES DIP	02483	761-3-R10K
A3 U100	1820-3456	7	1	IC-MM74HCT244N	01698	SN74HCT244N
A3 U101	1820-2698	7	1	IC-74F240PC	02910	74F240N
A3 U102	1820-2150	6	1	IC-8279-5	03811	D8279-5
A3 U103	1820-2861	6	1	IC-74F138PC	01698	SN74F138N
A3 U104	1820-2701	3	1	IC-74F374PC	01698	SN74F374N
A3 U105	1820-2795	5	1	IC-74F244PC	01698	SN74F244N
A3 U106	1820-3294	1	1	IC-SN74ALS374N	01698	SN74ALS374N
A3 U107	1820-3294	1	1	IC-SN74ALS374N	01698	SN74ALS374N
A3 U202	1818-3760	1	1	IC TC5564APL-15	06354	TC5564APL-15
A3 U203	1818-3760	1	1	IC TC5564APL-15	06354	TC5564APL-15
A3 U204	08130-13701	4	1	EPROM 1	28480	08130-13701
A3 U205	08130-13702	5	1	EPROM 2	28480	08130-13702
A3 U206	1858-0053	3	1	XSTR ARY 14P-DIP	02037	
A3 U207	1820-2506	6	1	IC-74F04PC	01698	SN74F04N

Table B-5. 8130A Microprocessorboard Parts List (continued)

Reference	HP Part #	CD	Qty	Description	Manuf'r	Part #
A3 U208	1820-2656	7	1	IC-SN74ALS00AN	01698	SN74ALS00AN
A3 U300	1820-3629	6	1	IC-MM74HCT04N	03406	MM74HCT04N
A3 U301	1820-3173	5	1	IC-MM74HC112N	02037	MC74HC112N
A3 U302	1820-2775	1	1	IC-SN74ALS10AN	01698	SN74ALS10AN
A3 U303	1820-3847	0	1	IC-MM74HCT138N	01698	SN74HCT138N
A3 U304	1820-3796	8	1	IC-MM74HCT139N	02910	74HCT139N
A3 U305	1820-3847	0	1	IC-MM74HCT138N	01698	SN74HCT138N
A3 U306	1820-5111	5	1	IC-74HCT21N	02910	74HCT21N
A3 U400	1820-3183	7	1	IC-MC74HC03N	02037	MC74HC03N
A3 U401	1820-3848	1	1	IC-MM74HCT374N	01698	SN74HCT374N
A3 U402	1820-4086	1	1	IC-74HCT273N	02910	74HCT273N
A3 U403	1820-3505	7	1	IC-SN74ALS191N	01698	SN74ALS191N
A3 U404	1820-4086	1	1	IC-74HCT273N	02910	74HCT273N
A3 U405	1820-2690	9	1	IC-74F32PC	01698	SN74F32N
A3 U406	1820-3665	0	1	IC-MM74HCT245N	01698	SN74HCT245N
A3 U407	1820-3940	4	1	IC-CD74HCT174E	03799	CD74HCT174E
A3 U408	1820-2854	7	1	IC-68B09ES	02037	MC68B09ES
A3 U409	1820-3940	4	1	IC-CD74HCT174E	03799	CD74HCT174E
A3 U410	1820-3940	4	1	IC-CD74HCT174E	03799	CD74HCT174E
A3 U500	1820-3348	6	1	IC-74F163APC	02910	74F163AN
A3 U501	1820-2694	3	1	IC-74F112PC	01698	SN74F112N
A3 U502	1820-2686	3	1	IC-74F08PC	01698	SN74F08
A3 U503	1820-3664	9	1	IC-MM74HCT00N	02910	74HCT00N
A3 U504	1820-2548	6	1	IC-9914	01698	
A3 U505	1820-3431	8	1	IC-INTERFACE	03406	DS75160AN
A3 U506	1820-3518	2	1	IC-INTERFACE	03406	DS75162AN
A3 W1	1258-0141	8	1	JUMPER-REM	01380	530153-2
A3 Y500	1813-0285	9	1	CLK-OSC-XTAL	01417	HS-100-20MHZ

Power Control Board

Table B-6. 8130A Power Control Board Parts List

Reference	HP Part #	CD	Qty	Description	Manuf'r	Part #
A4	08131-66504	7	1	BD AY PWR CTL	28480	08131-66504
A4 C2	0160-4822	2	1	CAP 1000pF 100 V	02010	SA201A102JAAH
A4 C5	0160-4822	2	1	CAP 1000pF 100 V	02010	SA201A102JAAH
A4 C6	0160-4822	2	1	CAP 1000pF 100 V	02010	SA201A102JAAH
A4 C8	0160-4822	2	1	CAP 1000pF 100 V	02010	SA201A102JAAH
A4 C10	0160-4822	2	1	CAP 1000pF 100 V	02010	SA201A102JAAH
A4 C12	0160-4822	2	1	CAP 1000pF 100 V	02010	SA201A102JAAH
A4 C14	0160-4822	2	1	CAP 1000pF 100 V	02010	SA201A102JAAH
A4 CP1	0180-4129	4	1	CAP 1uF 35 V	04200	173D105X9035V
A4 CP4	0180-4129	4	1	CAP 1uF 35 V	04200	173D105X9035V
A4 CP7	0180-4129	4	1	CAP 1uF 35 V	04200	173D105X9035V
A4 CP9	0180-4129	4	1	CAP 1uF 35 V	04200	173D105X9035V
A4 CP11	0180-4129	4	1	CAP 1uF 35 V	04200	173D105X9035V
A4 CP13	0180-4129	4	1	CAP 1uF 35 V	04200	173D105X9035V
A4 CP15	0180-0116	1	1	CAP 6.8uF 35 V	04200	150D685X9035B2-DYS
A4 CP16	0180-4129	4	1	CAP 1uF 35 V	04200	173D105X9035V
A4 CP17	0180-2690	0	1	CAP 3.3uF 15 V	04200	150D335X9015A2
A4 CP18	0180-2690	0	1	CAP 3.3uF 15 V	04200	150D335X9015A2
A4 CR1	1901-1098	1	1	DIO-1N4150	00746	
A4 CR2	1901-1098	1	1	DIO-1N4150	00746	
A4 CR3	1901-1098	1	1	DIO-1N4150	00746	
A4 CR4	1901-1098	1	1	DIO-1N4150	00746	
A4 CR5	1901-1098	1	1	DIO-1N4150	00746	
A4 CR6	1901-1098	1	1	DIO-1N4150	00746	
A4 CR7	1901-1098	1	1	DIO-1N4150	00746	
A4 CR8	1901-1098	1	1	DIO-1N4150	00746	
A4 CR9	1901-1098	1	1	DIO-1N4150	00746	
A4 CR10	1901-1098	1	1	DIO-1N4150	00746	

Table B-6. 8130A Power Control Board Parts List (continued)

Reference	HP Part #	CD	Qty	Description	Manuf'r	Part #
A4 CR11	1901-1098	1	1	DIO-1N4150	00746	
A4 CR12	1901-1098	1	1	DIO-1N4150	00746	
A4 CR13	1901-1098	1	1	DIO-1N4150	00746	
A4 CR14	1901-1098	1	1	DIO-1N4150	00746	
A4 CR15	1901-1098	1	1	DIO-1N4150	00746	
A4 CR16	1901-1098	1	1	DIO-1N4150	00746	
A4 CR17	1901-1098	1	1	DIO-1N4150	00746	
A4 CR18	1901-1098	1	1	DIO-1N4150	00746	
A4 CR19	1901-1098	1	1	DIO-1N4150	00746	
A4 CR20	1901-1098	1	1	DIO-1N4150	00746	
A4 J2	1252-1506	9	1	CONN-POST-TP-SKT	01380	1-166592-0
A4 J3	1252-1506	9	1	CONN-POST-TP-SKT	01380	1-166592-0
A4 Q1	1854-0392	5	1	XSTR NPN SI	02037	2N5088
A4 Q2	1854-0583	6	1	XSTR NPN SI	02037	MPS-A18
A4 Q4	1854-0583	6	1	XSTR NPN SI	02037	MPS-A18
A4 Q5	1854-0583	6	1	XSTR NPN SI	02037	MPS-A18
A4 Q6	1854-0583	6	1	XSTR NPN SI	02037	MPS-A18
A4 Q7	1853-0569	6	1	XSTR PNP SI	02037	
A4 Q8	1853-0569	6	1	XSTR PNP SI	02037	
A4 Q9	1853-0569	6	1	XSTR PNP SI	02037	
A4 Q10	1853-0569	6	1	XSTR PNP SI	02037	
A4 Q11	1853-0569	6	1	XSTR PNP SI	02037	
A4 Q12	1853-0569	6	1	XSTR PNP SI	02037	
A4 Q13	1853-0569	6	1	XSTR PNP SI	02037	
A4 Q14	1853-0569	6	1	XSTR PNP SI	02037	
A4 Q15	1854-0637	1	1	XSTR NPN 2N2219A	02037	2N2219A
A4 Q16	1854-0583	6	1	XSTR NPN SI	02037	MPS-A18
A4 Q17	1853-0569	6	1	XSTR PNP SI	02037	
A4 Q18	1853-0569	6	1	XSTR PNP SI	02037	
A4 Q20	1853-0569	6	1	XSTR PNP SI	02037	

Table B-6. 8130A Power Control Board Parts List (continued)

Reference	HP Part #	CD	Qty	Description	Manuf'r	Part #
A4 R1	0757-0278	9	1	RES 1.78K 1% .12	00746	CRB14 OR CRB25
A4 R2	0698-3160	8	1	RES 31.6K 1% .12	00746	CRB14 OR CRB25
A4 R3	0757-0442	9	1	RES 10K 1% .125W	00746	CRB14 OR CRB25
A4 R4	0698-3155	1	1	RES 4.64K 1% .12	00746	CRB14 OR CRB25
A4 R5	0757-0439	4	1	RES 6.81K 1% .12	00746	CRB14 OR CRB25
A4 R6	0757-0442	9	1	RES 10K 1% .125W	00746	CRB14 OR CRB25
A4 R7	0757-0280	3	1	RES 1K 1% .125W	00746	CRB14 OR CRB25
A4 R8	0757-0472	5	1	RES 200K 1% .125	00746	CRB14 OR CRB25
A4 R9	0698-6620	1	1	RES 150K .1% .12	00746	CRB14 OR CRB25
A4 R10	0698-6353	7	1	RES 50K .1% .125	00746	CRB14 OR CRB25
A4 R11	0698-4483	0	1	RES 18.7K 1% .12	00746	CRB14 OR CRB25
A4 R12	0757-0472	5	1	RES 200K 1% .125	00746	CRB14 OR CRB25
A4 R13	0757-0444	1	1	RES 12.1K 1% .12	00746	CRB14 OR CRB25
A4 R14	0757-0442	9	1	RES 10K 1% .125W	00746	CRB14 OR CRB25
A4 R15	0698-3155	1	1	RES 4.64K 1% .12	00746	CRB14 OR CRB25
A4 R16	0757-0438	3	1	RES 5.11K 1% .12	00746	CRB14 OR CRB25
A4 R17	0698-3155	1	1	RES 4.64K 1% .12	00746	CRB14 OR CRB25
A4 R18	0698-3155	1	1	RES 4.64K 1% .12	00746	CRB14 OR CRB25
A4 R19	0757-0442	9	1	RES 10K 1% .125W	00746	CRB14 OR CRB25
A4 R20	0698-4425	0	1	RES 1.54K 1% .12	00746	CRB14 OR CRB25
A4 R21	0757-0472	5	1	RES 200K 1% .125	00746	CRB14 OR CRB25
A4 R22	0757-0465	6	1	RES 100K 1% .125	00746	CRB14 OR CRB25
A4 R23	0699-0844	1	1	RES 51.1K .1% .1	00746	CRB14 OR CRB25
A4 R24	0698-6353	7	1	RES 50K .1% .125	00746	CRB14 OR CRB25
A4 R25	0757-0442	9	1	RES 10K 1% .125W	00746	CRB14 OR CRB25
A4 R26	0698-3155	1	1	RES 4.64K 1% .12	00746	CRB14 OR CRB25
A4 R27	0698-3155	1	1	RES 4.64K 1% .12	00746	CRB14 OR CRB25
A4 R28	0757-0439	4	1	RES 6.81K 1% .12	00746	CRB14 OR CRB25
A4 R29	0757-0472	5	1	RES 200K 1% .125	00746	CRB14 OR CRB25
A4 R30	0698-4435	2	1	RES 2.49K 1% .12	00746	CRB14 OR CRB25

Table B-6. 8130A Power Control Board Parts List (continued)

Reference	HP Part #	CD	Qty	Description	Manuf'r	Part #
A4 R31	0757-0465	6	1	RES 100K 1% .125	00746	CRB14 OR CRB25
A4 R32	0698-6353	7	1	RES 50K .1% .125	00746	CRB14 OR CRB25
A4 R33	0699-0721	3	1	RES 33K .1% .125	00746	CRB14 OR CRB25
A4 R34	0757-0280	3	1	RES 1K 1% .125W	00746	CRB14 OR CRB25
A4 R35	0757-0442	9	1	RES 10K 1% .125W	00746	CRB14 OR CRB25
A4 R36	0757-0444	1	1	RES 12.1K 1% .12	00746	CRB14 OR CRB25
A4 R37	0698-3155	1	1	RES 4.64K 1% .12	00746	CRB14 OR CRB25
A4 R38	0757-0442	9	1	RES 10K 1% .125W	00746	CRB14 OR CRB25
A4 R39	0757-0438	3	1	RES 5.11K 1% .12	00746	CRB14 OR CRB25
A4 R40	0757-0472	5	1	RES 200K 1% .125	00746	CRB14 OR CRB25
A4 R41	0757-0422	5	1	RES 909 1% .125W	00746	CRB14 OR CRB25
A4 R42	0757-0465	6	1	RES 100K 1% .125	00746	CRB14 OR CRB25
A4 R43	0698-6353	7	1	RES 50K .1% .125	00746	CRB14 OR CRB25
A4 R44	0699-0844	1	1	RES 51.1K .1% .1	00746	CRB14 OR CRB25
A4 R45	0757-0442	9	1	RES 10K 1% .125W	00746	CRB14 OR CRB25
A4 R46	0698-3160	8	1	RES 31.6K 1% .12	00746	CRB14 OR CRB25
A4 R47	0757-0421	4	1	RES 825 1% .125W	00746	CRB14 OR CRB25
A4 R48	0698-3155	1	1	RES 4.64K 1% .12	00746	CRB14 OR CRB25
A4 R49	0757-0442	9	1	RES 10K 1% .125W	00746	CRB14 OR CRB25
A4 R50	0757-0439	4	1	RES 6.81K 1% .12	00746	CRB14 OR CRB25
A4 R51	0757-0472	5	1	RES 200K 1% .125	00746	CRB14 OR CRB25
A4 R52	0757-0274	5	1	RES 1.21K 1% .12	00746	CRB14 OR CRB25
A4 R53	0698-6353	7	1	RES 50K .1% .125	00746	CRB14 OR CRB25
A4 R54	0698-6620	1	1	RES 150K .1% .12	00746	CRB14 OR CRB25
A4 R55	0757-0442	9	1	RES 10K 1% .125W	00746	CRB14 OR CRB25
A4 R56	0698-3161	9	1	RES 38.3K 1% .12	00746	CRB14 OR CRB25
A4 R57	0698-3153	9	1	RES 3.83K 1% .12	00746	CRB14 OR CRB25
A4 R58	0698-3155	1	1	RES 4.64K 1% .12	00746	CRB14 OR CRB25
A4 R59	0698-3156	2	1	RES 14.7K 1% .12	00746	CRB14 OR CRB25
A4 R60	0757-0441	8	1	RES 8.25K 1% .12	00746	CRB14 OR CRB25

Table B-6. 8130A Power Control Board Parts List (continued)

Reference	HP Part #	CD	Qty	Description	Manuf'r	Part #
A4 R61	0757-0472	5	1	RES 200K 1% .125	00746	CRB14 OR CRB25
A4 R62	0757-0280	3	1	RES 1K 1% .125W	00746	CRB14 OR CRB25
A4 R63	0698-6353	7	1	RES 50K .1% .125	00746	CRB14 OR CRB25
A4 R64	0698-6376	4	1	RES 200K .1% .12	00746	CRB14 OR CRB25
A4 R65	0757-0416	7	1	RES 511 1% .125W	00746	CRB14 OR CRB25
A4 R66	0757-0280	3	1	RES 1K 1% .125W	00746	CRB14 OR CRB25
A4 R67	0698-6360	6	1	RES 10K .1% .125	00746	CRB14 OR CRB25
A4 R68	0698-6360	6	1	RES 10K .1% .125	00746	CRB14 OR CRB25
A4 R69	0698-6360	6	1	RES 10K .1% .125	00746	CRB14 OR CRB25
A4 R70	0698-6360	6	1	RES 10K .1% .125	00746	CRB14 OR CRB25
A4 R71	0698-6360	6	1	RES 10K .1% .125	00746	CRB14 OR CRB25
A4 R72	0757-0280	3	1	RES 1K 1% .125W	00746	CRB14 OR CRB25
A4 R73	0757-0394	0	1	RES 51.1 1% .125	00746	CRB14 OR CRB25
A4 TP1	0360-2264	6	1	TERM.-TEST POINT	10358	1095D
A4 TP2	0360-2264	6	1	TERM.-TEST POINT	10358	1095D
A4 TP3	0360-2264	6	1	TERM.-TEST POINT	10358	1095D
A4 TP4	0360-2264	6	1	TERM.-TEST POINT	10358	1095D
A4 TP5	0360-2264	6	1	TERM.-TEST POINT	10358	1095D
A4 U1	1826-0346	0	1	IC 358	03406	LM358N
A4 U2	1826-0346	0	1	IC 358	03406	LM358N
A4 U3	1826-0346	0	1	IC 358	03406	LM358N
A4 U4	1826-0346	0	1	IC 358	03406	LM358N
A4 U5	1826-0346	0	1	IC 358	03406	LM358N
A4 U6	1826-0346	0	1	IC 358	03406	LM358N
A4 U7	1826-0718	0	1	IC MC1404U5	02037	MC1404U5
A4 U8	1826-0161	7	1	IC 324	02037	LM324N
A4 VR1	1902-0964	0	1	DIO-ZNR 18V 5%	02037	
A4 VR2	1902-0955	9	1	DIO-ZNR 7.5V 5%	02037	

Table B-7. 8130A Standard Timing Board Parts List

Reference	HP Part #	CD	Qty	Description	Manuf'r	Part #
A5	08130-66505	7	1	BD AY TIMING STD	28480	08130-66505
A5 C101	0160-5750	7	1	CAP 2200pF 100 V	06121	B37981-J1222-M034
A5 C103	0160-5750	7	1	CAP 2200pF 100 V	06121	B37981-J1222-M034
A5 C105	0160-5750	7	1	CAP 2200pF 100 V	06121	B37981-J1222-M034
A5 C107	0160-5750	7	1	CAP 2200pF 100 V	06121	B37981-J1222-M034
A5 C109	0160-5750	7	1	CAP 2200pF 100 V	06121	B37981-J1222-M034
A5 C110	0160-6623	5	1	CAP 0.1uF 50 V	02010	SA115C104MAAH
A5 C111	0160-6623	5	1	CAP 0.1uF 50 V	02010	SA115C104MAAH
A5 C112	0160-6623	5	1	CAP 0.1uF 50 V	02010	SA115C104MAAH
A5 C113	0160-6623	5	1	CAP 0.1uF 50 V	02010	SA115C104MAAH
A5 C117	0160-6623	5	1	CAP 0.1uF 50 V	02010	SA115C104MAAH
A5 C121	0160-6623	5	1	CAP 0.1uF 50 V	02010	SA115C104MAAH
A5 C122	0160-6623	5	1	CAP 0.1uF 50 V	02010	SA115C104MAAH
A5 C126	0160-6623	5	1	CAP 0.1uF 50 V	02010	SA115C104MAAH
A5 C127	0160-6623	5	1	CAP 0.1uF 50 V	02010	SA115C104MAAH
A5 C131	0160-6623	5	1	CAP 0.1uF 50 V	02010	SA115C104MAAH
A5 C140	0160-6623	5	1	CAP 0.1uF 50 V	02010	SA115C104MAAH
A5 C141	0160-6623	5	1	CAP 0.1uF 50 V	02010	SA115C104MAAH
A5 C142	0160-6623	5	1	CAP 0.1uF 50 V	02010	SA115C104MAAH
A5 C181	0160-5746	1	1	CAP 0.1uF 50 V	06121	B37987-T5104-M11
A5 C202	0160-6623	5	1	CAP 0.1uF 50 V	02010	SA115C104MAAH
A5 C203	0160-6623	5	1	CAP 0.1uF 50 V	02010	SA115C104MAAH
A5 C204	0160-6623	5	1	CAP 0.1uF 50 V	02010	SA115C104MAAH
A5 C205	0160-6500	7	1	CAP 0.01uF 100 V	02010	SA101C103KAAH
A5 C206	0160-6500	7	1	CAP 0.01uF 100 V	02010	SA101C103KAAH

Table B-7. 8130A Standard Timing Board Parts List (continued)

Reference	HP Part #	CD	Qty	Description	Manuf'r	Part #
A5 C207	0160-6623	5	1	CAP 0.1uF 50 V	02010	SA115C104MAAH
A5 C208	0160-6623	5	1	CAP 0.1uF 50 V	02010	SA115C104MAAH
A5 C209	0160-6500	7	1	CAP 0.01uF 100 V	02010	SA101C103KAAH
A5 C210	0160-6500	7	1	CAP 0.01uF 100 V	02010	SA101C103KAAH
A5 C220	0160-6500	7	1	CAP 0.01uF 100 V	02010	SA101C103KAAH
A5 C221	0160-6500	7	1	CAP 0.01uF 100 V	02010	SA101C103KAAH
A5 C222	0160-6500	7	1	CAP 0.01uF 100 V	02010	SA101C103KAAH
A5 C223	0160-5726	7	1	CAP 0.01uF 100 V	06121	B37987-J1103-M034
A5 C224	0160-5726	7	1	CAP 0.01uF 100 V	06121	B37987-J1103-M034
A5 C300	0160-5746	1	1	CAP 0.1uF 50 V	06121	B37987-T5104-M11
A5 C301	0160-6623	5	1	CAP 0.1uF 50 V	02010	SA115C104MAAH
A5 C303	0160-4535	4	1	CAP 1uF 50 V	02010	SR305C105KAAH
A5 C304	0160-5746	1	1	CAP 0.1uF 50 V	06121	B37987-T5104-M11
A5 C305	0160-5746	1	1	CAP 0.1uF 50 V	06121	B37987-T5104-M11
A5 C306	0160-5726	7	1	CAP 0.01uF 100 V	06121	B37987-J1103-M034
A5 C307	0160-6623	5	1	CAP 0.1uF 50 V	02010	SA115C104MAAH
A5 C308	0160-6623	5	1	CAP 0.1uF 50 V	02010	SA115C104MAAH
A5 C309	0160-6623	5	1	CAP 0.1uF 50 V	02010	SA115C104MAAH
A5 C310	0160-6623	5	1	CAP 0.1uF 50 V	02010	SA115C104MAAH
A5 C311	0160-5726	7	1	CAP 0.01uF 100 V	06121	B37987-J1103-M034
A5 C312	0160-6500	7	1	CAP 0.01uF 100 V	02010	SA101C103KAAH
A5 C313	0160-6500	7	1	CAP 0.01uF 100 V	02010	SA101C103KAAH
A5 C314	0160-6623	5	1	CAP 0.1uF 50 V	02010	SA115C104MAAH
A5 C315	0160-6623	5	1	CAP 0.1uF 50 V	02010	SA115C104MAAH
A5 C317	0160-6623	5	1	CAP 0.1uF 50 V	02010	SA115C104MAAH
A5 C318	0160-6623	5	1	CAP 0.1uF 50 V	02010	SA115C104MAAH
A5 C320	0160-6623	5	1	CAP 0.1uF 50 V	02010	SA115C104MAAH
A5 C321	0160-6500	7	1	CAP 0.01uF 100 V	02010	SA101C103KAAH
A5 C322	0160-6500	7	1	CAP 0.01uF 100 V	02010	SA101C103KAAH
A5 C324	0160-6623	5	1	CAP 0.1uF 50 V	02010	SA115C104MAAH

Table B-7. 8130A Standard Timing Board Parts List (continued)

Reference	HP Part #	CD	Qty	Description	Manuf'r	Part #
A5 C325	0160-5746	1	1	CAP 0.1uF 50 V	06121	B37987-T5104-M11
A5 C327	0160-6500	7	1	CAP 0.01uF 100 V	02010	SA101C103KAAH
A5 C328	0160-6500	7	1	CAP 0.01uF 100 V	02010	SA101C103KAAH
A5 C330	0160-6623	5	1	CAP 0.1uF 50 V	02010	SA115C104MAAH
A5 C331	0160-6623	5	1	CAP 0.1uF 50 V	02010	SA115C104MAAH
A5 C333	0160-6623	5	1	CAP 0.1uF 50 V	02010	SA115C104MAAH
A5 C335	0160-4535	4	1	CAP 1uF 50 V	02010	SR305C105KAAH
A5 C336	0160-6623	5	1	CAP 0.1uF 50 V	02010	SA115C104MAAH
A5 C340	0160-6623	5	1	CAP 0.1uF 50 V	02010	SA115C104MAAH
A5 C341	0160-5726	7	1	CAP 0.01uF 100 V	06121	B37987-J1103-M034
A5 C342	0160-6500	7	1	CAP 0.01uF 100 V	02010	SA101C103KAAH
A5 C343	0160-6500	7	1	CAP 0.01uF 100 V	02010	SA101C103KAAH
A5 C350	0160-6623	5	1	CAP 0.1uF 50 V	02010	SA115C104MAAH
A5 C360	0160-6623	5	1	CAP 0.1uF 50 V	02010	SA115C104MAAH
A5 C363	0160-6623	5	1	CAP 0.1uF 50 V	02010	SA115C104MAAH
A5 C399	0160-5741	6	1	CAP 47pF 100 V	06121	B37979-J1470-J034
A5 C400	0160-5746	1	1	CAP 0.1uF 50 V	06121	B37987-T5104-M11
A5 C401	0160-5746	1	1	CAP 0.1uF 50 V	06121	B37987-T5104-M11
A5 C403	0160-4535	4	1	CAP 1uF 50 V	02010	SR305C105KAAH
A5 C404	0160-6623	5	1	CAP 0.1uF 50 V	02010	SA115C104MAAH
A5 C405	0160-5746	1	1	CAP 0.1uF 50 V	06121	B37987-T5104-M11
A5 C406	0160-5726	7	1	CAP 0.01uF 100 V	06121	B37987-J1103-M034
A5 C411	0160-5726	7	1	CAP 0.01uF 100 V	06121	B37987-J1103-M034
A5 C412	0160-6500	7	1	CAP 0.01uF 100 V	02010	SA101C103KAAH
A5 C413	0160-6500	7	1	CAP 0.01uF 100 V	02010	SA101C103KAAH
A5 C414	0160-6623	5	1	CAP 0.1uF 50 V	02010	SA115C104MAAH
A5 C415	0160-6623	5	1	CAP 0.1uF 50 V	02010	SA115C104MAAH
A5 C417	0160-6623	5	1	CAP 0.1uF 50 V	02010	SA115C104MAAH
A5 C418	0160-6623	5	1	CAP 0.1uF 50 V	02010	SA115C104MAAH
A5 C420	0160-6623	5	1	CAP 0.1uF 50 V	02010	SA115C104MAAH

Table B-7. 8130A Standard Timing Board Parts List (continued)

Reference	HP Part #	CD	Qty	Description	Manuf'r	Part #
A5 C421	0160-6500	7	1	CAP 0.01uF 100 V	02010	SA101C103KAAH
A5 C422	0160-6500	7	1	CAP 0.01uF 100 V	02010	SA101C103KAAH
A5 C424	0160-6623	5	1	CAP 0.1uF 50 V	02010	SA115C104MAAH
A5 C425	0160-5746	1	1	CAP 0.1uF 50 V	06121	B37987-T5104-M11
A5 C427	0160-6500	7	1	CAP 0.01uF 100 V	02010	SA101C103KAAH
A5 C428	0160-6500	7	1	CAP 0.01uF 100 V	02010	SA101C103KAAH
A5 C430	0160-6623	5	1	CAP 0.1uF 50 V	02010	SA115C104MAAH
A5 C431	0160-6623	5	1	CAP 0.1uF 50 V	02010	SA115C104MAAH
A5 C433	0160-6623	5	1	CAP 0.1uF 50 V	02010	SA115C104MAAH
A5 C435	0160-4535	4	1	CAP 1uF 50 V	02010	SR305C105KAAH
A5 C436	0160-6623	5	1	CAP 0.1uF 50 V	02010	SA115C104MAAH
A5 C440	0160-6623	5	1	CAP 0.1uF 50 V	02010	SA115C104MAAH
A5 C441	0160-5726	7	1	CAP 0.01uF 100 V	06121	B37987-J1103-M034
A5 C442	0160-6500	7	1	CAP 0.01uF 100 V	02010	SA101C103KAAH
A5 C443	0160-6500	7	1	CAP 0.01uF 100 V	02010	SA101C103KAAH
A5 C450	0160-6623	5	1	CAP 0.1uF 50 V	02010	SA115C104MAAH
A5 C460	0160-6623	5	1	CAP 0.1uF 50 V	02010	SA115C104MAAH
A5 C465	0160-6623	5	1	CAP 0.1uF 50 V	02010	SA115C104MAAH
A5 C470	0160-3872	0	1	CAP 2.2pF 200 V	06352	FD12C0G2D2R2C
A5 C471	0160-3872	0	1	CAP 2.2pF 200 V	06352	FD12C0G2D2R2C
A5 C500	0160-5746	1	1	CAP 0.1uF 50 V	06121	B37987-T5104-M11
A5 C501	0160-5746	1	1	CAP 0.1uF 50 V	06121	B37987-T5104-M11
A5 C503	0160-4535	4	1	CAP 1uF 50 V	02010	SR305C105KAAH
A5 C504	0160-5746	1	1	CAP 0.1uF 50 V	06121	B37987-T5104-M11
A5 C505	0160-6623	5	1	CAP 0.1uF 50 V	02010	SA115C104MAAH
A5 C506	0160-5726	7	1	CAP 0.01uF 100 V	06121	B37987-J1103-M034
A5 C511	0160-5726	7	1	CAP 0.01uF 100 V	06121	B37987-J1103-M034
A5 C512	0160-6500	7	1	CAP 0.01uF 100 V	02010	SA101C103KAAH
A5 C513	0160-6500	7	1	CAP 0.01uF 100 V	02010	SA101C103KAAH
A5 C514	0160-6623	5	1	CAP 0.1uF 50 V	02010	SA115C104MAAH

Table B-7. 8130A Standard Timing Board Parts List (continued)

Reference	HP Part #	CD	Qty	Description	Manuf'r	Part #
A5 C515	0160-6623	5	1	CAP 0.1uF 50 V	02010	SA115C104MAAH
A5 C517	0160-6623	5	1	CAP 0.1uF 50 V	02010	SA115C104MAAH
A5 C518	0160-6623	5	1	CAP 0.1uF 50 V	02010	SA115C104MAAH
A5 C520	0160-6623	5	1	CAP 0.1uF 50 V	02010	SA115C104MAAH
A5 C521	0160-6500	7	1	CAP 0.01uF 100 V	02010	SA101C103KAAH
A5 C522	0160-6500	7	1	CAP 0.01uF 100 V	02010	SA101C103KAAH
A5 C524	0160-6623	5	1	CAP 0.1uF 50 V	02010	SA115C104MAAH
A5 C525	0160-5746	1	1	CAP 0.1uF 50 V	06121	B37987-T5104-M11
A5 C527	0160-6500	7	1	CAP 0.01uF 100 V	02010	SA101C103KAAH
A5 C528	0160-6500	7	1	CAP 0.01uF 100 V	02010	SA101C103KAAH
A5 C530	0160-6623	5	1	CAP 0.1uF 50 V	02010	SA115C104MAAH
A5 C531	0160-6623	5	1	CAP 0.1uF 50 V	02010	SA115C104MAAH
A5 C533	0160-6623	5	1	CAP 0.1uF 50 V	02010	SA115C104MAAH
A5 C535	0160-4535	4	1	CAP 1uF 50 V	02010	SR305C105KAAH
A5 C536	0160-6623	5	1	CAP 0.1uF 50 V	02010	SA115C104MAAH
A5 C540	0160-6623	5	1	CAP 0.1uF 50 V	02010	SA115C104MAAH
A5 C541	0160-5726	7	1	CAP 0.01uF 100 V	06121	B37987-J1103-M034
A5 C542	0160-6500	7	1	CAP 0.01uF 100 V	02010	SA101C103KAAH
A5 C543	0160-6500	7	1	CAP 0.01uF 100 V	02010	SA101C103KAAH
A5 C550	0160-6623	5	1	CAP 0.1uF 50 V	02010	SA115C104MAAH
A5 C560	0160-6623	5	1	CAP 0.1uF 50 V	02010	SA115C104MAAH
A5 C565	0160-6623	5	1	CAP 0.1uF 50 V	02010	SA115C104MAAH
A5 C570	0160-3872	0	1	CAP 2.2pF 200 V	06352	FD12C0G2D2R2C
A5 C571	0160-3872	0	1	CAP 2.2pF 200 V	06352	FD12C0G2D2R2C
A5 CP100	0180-1974	1	1	CAP 10uF 35 V	04200	150D106X9035R2-DYS
A5 CP102	0180-0229	7	1	CAP 33uF 10 V	04200	150D336X9010B2-DYS
A5 CP104	0180-0229	7	1	CAP 33uF 10 V	04200	150D336X9010B2-DYS
A5 CP106	0180-0229	7	1	CAP 33uF 10 V	04200	150D336X9010B2-DYS
A5 CP108	0180-1974	1	1	CAP 10uF 35 V	04200	150D106X9035R2-DYS
A5 CP180	0180-0229	7	1	CAP 33uF 10 V	04200	150D336X9010B2-DYS

Table B-7. 8130A Standard Timing Board Parts List (continued)

Reference	HP Part #	CD	Qty	Description	Manuf'r	Part #
A5 CP200	0180-4129	4	1	CAP 1uF 35 V	04200	173D105X9035V
A5 CP201	0180-4129	4	1	CAP 1uF 35 V	04200	173D105X9035V
A5 CR102	1901-0535	9	1	DIO- SCHOTTKY SM	02062	50825511
A5 CR103	1901-0734	0	1	DIO-1N5818	02037	1N5818
A5 CR310	1901-1098	1	1	DIO-1N4150	00746	
A5 CR311	1901-1098	1	1	DIO-1N4150	00746	
A5 CR312	1901-1098	1	1	DIO-1N4150	00746	
A5 CR313	1901-1098	1	1	DIO-1N4150	00746	
A5 CR314	1901-1098	1	1	DIO-1N4150	00746	
A5 CR315	1901-1098	1	1	DIO-1N4150	00746	
A5 CR410	1901-1098	1	1	DIO-1N4150	00746	
A5 CR411	1901-1098	1	1	DIO-1N4150	00746	
A5 CR412	1901-1098	1	1	DIO-1N4150	00746	
A5 CR413	1901-1098	1	1	DIO-1N4150	00746	
A5 CR414	1901-1098	1	1	DIO-1N4150	00746	
A5 CR415	1901-1098	1	1	DIO-1N4150	00746	
A5 CR416	1901-0731	7	1	DIO-PWR RECT	02037	SR3010-3RL
A5 CR510	1901-1098	1	1	DIO-1N4150	00746	
A5 CR511	1901-1098	1	1	DIO-1N4150	00746	
A5 CR512	1901-1098	1	1	DIO-1N4150	00746	
A5 CR513	1901-1098	1	1	DIO-1N4150	00746	
A5 CR514	1901-1098	1	1	DIO-1N4150	00746	
A5 CR515	1901-1098	1	1	DIO-1N4150	00746	
A5 J100	1251-8324	1	1	CONN-POST-TP-HDR	04486	G06M96P4BEBL-004-715
A5 J101	1251-5380	3	1	CONN-POST-TP-HDR	02946	68000-602
A5 J102	1251-5380	3	1	CONN-POST-TP-HDR	02946	68000-602
A5 J200	1250-0543	8	1	CONN-RF SM-SNP	05769	51-053-0349-BE8
A5 J400	1251-5380	3	1	CONN-POST-TP-HDR	02946	68000-602
A5 K400	0490-1667	6	1	RLY 2C 12VDC	09809	RG2T-12V
A5 L100	9100-1788	6	1	CORE-FERRITE	02995	VK200 20/4B

Table B-7. 8130A Standard Timing Board Parts List (continued)

Reference	HP Part #	CD	Qty	Description	Manuf'r	Part #
A5 L101	9100-1788	6	1	CORE-FERRITE	02995	VK200 20/4B
A5 L102	9100-1788	6	1	CORE-FERRITE	02995	VK200 20/4B
A5 L103	9100-1788	6	1	CORE-FERRITE	02995	VK200 20/4B
A5 L104	9100-1788	6	1	CORE-FERRITE	02995	VK200 20/4B
A5 L110	9100-2891	4	1	L 50NH +-10%	03273	10M050K-1
A5 L111	9100-2891	4	1	L 50NH +-10%	03273	10M050K-1
A5 L112	9100-2891	4	1	L 50NH +-10%	03273	10M050K-1
A5 L300	8159-0005	0	1	RES-ZERO OHMS	01339	L-2007-1
A5 L400	8159-0005	0	1	RES-ZERO OHMS	01339	L-2007-1
A5 L400	9100-2891	4		L 50NH +-10%	03273	10M050K-1
A5 L500	9100-2891	4	1	L 50NH +-10%	03273	10M050K-1
A5 MP130	1400-1437	0	3	CLAMP-CABLE	11808	
A5 MP134	1400-0082	9	2	CLMP-CA	02414	HP-2N
A5 MP136	3050-0891	7	2	WASHER-FL MTLC 3	06691	
A5 MP201	54100-29104	5	1	SPRING	28480	54100-29104
A5 MP202	54100-29101	2	1	CLAMP	28480	54100-29101
A5 MP209	54100-21103	8	1	SPRING	28480	54100-21103
A5 MP214	0340-0433	5	1	INSUL-FLG-BSHG	03232	
A5 MP215	0340-1212	0	1	INSULATOR	28480	0340-1212
A5 MP230	0380-1731	2	4	SPCR-PRS-IN	03981	YC3-4564
A5 MP240	0515-0659	8	4	SCR-MACHINE	05610	
A5 MP300	1200-1468	3	1	SOCKET RGA72 CN	10803	1KS072-33TT
A5 MP301	1200-1410	5	1	SOCKET PGA 72PI	10803	1KS072-33TG
A5 MP400	1200-1468	3	1	SOCKET RGA72 CN	10803	1KS072-33TT
A5 MP401	1200-1410	5	1	SOCKET PGA 72PI	10803	1KS072-33TG
A5 MP500	1200-1468	3	1	SOCKET RGA72 CN	10803	1KS072-33TT
A5 MP501	1200-1410	5	1	SOCKET PGA 72PI	10803	1KS072-33TG
A5 Q200	1853-0563	0	1	XSTR PNP SI	02037	2N3906(SEL)
A5 Q310	1854-1028	6	1	XSTR NPN SI	02037	2N3904
A5 Q312	1855-0309	6	1	MOSFET 2N4352 P-	02037	2N4352

Table B-7. 8130A Standard Timing Board Parts List (continued)

Reference	HP Part #	CD	Qty	Description	Manuf'r	Part #
A5 Q313	1855-0309	6	1	MOSFET 2N4352 P-	02037	2N4352
A5 Q314	1853-0569	6	1	XSTR PNP SI	02037	
A5 Q315	1854-0392	5	1	XSTR NPN SI	02037	2N5088
A5 Q316	1853-0569	6	1	XSTR PNP SI	02037	
A5 Q317	1854-0392	5	1	XSTR NPN SI	02037	2N5088
A5 Q318	1854-0392	5	1	XSTR NPN SI	02037	2N5088
A5 Q319	1853-0569	6	1	XSTR PNP SI	02037	
A5 Q410	1854-1028	6	1	XSTR NPN SI	02037	2N3904
A5 Q412	1855-0309	6	1	MOSFET 2N4352 P-	02037	2N4352
A5 Q413	1853-0569	6	1	XSTR PNP SI	02037	
A5 Q414	1853-0569	6	1	XSTR PNP SI	02037	
A5 Q415	1854-0392	5	1	XSTR NPN SI	02037	2N5088
A5 Q416	1853-0569	6	1	XSTR PNP SI	02037	
A5 Q417	1854-0392	5	1	XSTR NPN SI	02037	2N5088
A5 Q418	1854-0392	5	1	XSTR NPN SI	02037	2N5088
A5 Q419	1853-0569	6	1	XSTR PNP SI	02037	
A5 Q480	1854-0472	2	1	XSTR NPN SI DARL	02037	MPS-A14
A5 Q510	1854-1028	6	1	XSTR NPN SI	02037	2N3904
A5 Q512	1855-0309	6	1	MOSFET 2N4352 P-	02037	2N4352
A5 Q513	1853-0569	6	1	XSTR PNP SI	02037	
A5 Q514	1853-0569	6	1	XSTR PNP SI	02037	
A5 Q515	1854-0392	5	1	XSTR NPN SI	02037	2N5088
A5 Q516	1853-0569	6	1	XSTR PNP SI	02037	
A5 Q517	1854-0392	5	1	XSTR NPN SI	02037	2N5088
A5 Q518	1854-0392	5	1	XSTR NPN SI	02037	2N5088
A5 Q519	1853-0569	6	1	XSTR PNP SI	02037	
A5 R100	0757-0442	9	1	RES 10K 1% .125W	00746	CRB14 OR CRB25
A5 R200	0699-1206	1	1	RES 127 1% 2W MO	02499	GS-3
A5 R201	0699-1206	1	1	RES 127 1% 2W MO	02499	GS-3
A5 R202	0698-4855	0	1	RES 267 1% .5W T	01074	H2

Table B-7. 8130A Standard Timing Board Parts List (continued)

Reference	HP Part #	CD	Qty	Description	Manuf'r	Part #
A5 R204	0698-7205	0	1	RES 51.1 1% .05W	00746	CRB20
A5 R205	0757-0180	2	1	RES 31.6 1% .125	00746	CRB14 OR CRB25
A5 R206	0698-3162	0	1	RES 46.4K 1% .12	00746	CRB14 OR CRB25
A5 R208	0698-6347	9	1	RES 1.5K .1% .12	00746	CRB14 OR CRB25
A5 R209	0757-1094	9	1	RES 1.47K 1% .12	00746	CRB14 OR CRB25
A5 R210	0698-6963	5	1	RES 5.55K .1% .1	00746	CRB14 OR CRB25
A5 R211	0698-6963	5	1	RES 5.55K .1% .1	00746	CRB14 OR CRB25
A5 R212	0757-0394	0	1	RES 51.1 1% .125	00746	CRB14 OR CRB25
A5 R220	0757-0421	4	1	RES 825 1% .125W	00746	CRB14 OR CRB25
A5 R221	0698-3132	4	1	RES 261 1% .125W	00746	CRB14 OR CRB25
A5 R300	0757-0442	9	1	RES 10K 1% .125W	00746	CRB14 OR CRB25
A5 R301	0757-0394	0	1	RES 51.1 1% .125	00746	CRB14 OR CRB25
A5 R302	0698-4425	0	1	RES 1.54K 1% .12	00746	CRB14 OR CRB25
A5 R303	0757-0280	3	1	RES 1K 1% .125W	00746	CRB14 OR CRB25
A5 R304	0757-0280	3	1	RES 1K 1% .125W	00746	CRB14 OR CRB25
A5 R305	0757-0394	0	1	RES 51.1 1% .125	00746	CRB14 OR CRB25
A5 R306	0757-0394	0	1	RES 51.1 1% .125	00746	CRB14 OR CRB25
A5 R307	0698-3132	4	1	RES 261 1% .125W	00746	CRB14 OR CRB25
A5 R309	0757-0394	0	1	RES 51.1 1% .125	00746	CRB14 OR CRB25
A5 R310	0757-0279	0	1	RES 3.16K 1% .12	00746	CRB14 OR CRB25
A5 R311	0698-6360	6	1	RES 10K .1% .125	00746	CRB14 OR CRB25
A5 R312	0699-1100	4	1	RES 6.984K .1% .	01074	H8
A5 R313	0698-3153	9	1	RES 3.83K 1% .12	00746	CRB14 OR CRB25
A5 R314	0757-0449	6	1	RES 20K 1% .125W	00746	CRB14 OR CRB25
A5 R315	0757-0449	6	1	RES 20K 1% .125W	00746	CRB14 OR CRB25
A5 R319	0757-0280	3	1	RES 1K 1% .125W	00746	CRB14 OR CRB25
A5 R320	0757-0279	0	1	RES 3.16K 1% .12	00746	CRB14 OR CRB25
A5 R321	0757-0279	0	1	RES 3.16K 1% .12	00746	CRB14 OR CRB25
A5 R322	0757-0317	7	1	RES 1.33K 1% .12	00746	CRB14 OR CRB25
A5 R323	0698-3154	0	1	RES 4.22K 1% .12	00746	CRB14 OR CRB25

Table B-7. 8130A Standard Timing Board Parts List (continued)

Reference	HP Part #	CD	Qty	Description	Manuf'r	Part #
A5 R324	0698-0085	0	1	RES 2.61K 1% .12	00746	CRB14 OR CRB25
A5 R325	0698-0085	0	1	RES 2.61K 1% .12	00746	CRB14 OR CRB25
A5 R326	0757-0419	0	1	RES 681 1% .125W	00746	CRB14 OR CRB25
A5 R327	0757-0394	0	1	RES 51.1 1% .125	00746	CRB14 OR CRB25
A5 R328	0757-0394	0	1	RES 51.1 1% .125	00746	CRB14 OR CRB25
A5 R329	0757-0419	0	1	RES 681 1% .125W	00746	CRB14 OR CRB25
A5 R330	0698-6347	9	1	RES 1.5K .1% .12	00746	CRB14 OR CRB25
A5 R331	0698-6348	0	1	RES 3K .1% .125W	00746	CRB14 OR CRB25
A5 R333	0698-6347	9	1	RES 1.5K .1% .12	00746	CRB14 OR CRB25
A5 R334	0757-0279	0	1	RES 3.16K 1% .12	00746	CRB14 OR CRB25
A5 R335	0698-3438	3	1	RES 147 1% .125W	00746	CRB14 OR CRB25
A5 R336	0757-0394	0	1	RES 51.1 1% .125	00746	CRB14 OR CRB25
A5 R337	0757-0279	0	1	RES 3.16K 1% .12	00746	CRB14 OR CRB25
A5 R338	0757-0349	5	1	RES 22.6K 1% .12	00746	CRB14 OR CRB25
A5 R339	0757-0477	0	1	RES 332K 1% .125	00746	CRB14 OR CRB25
A5 R340	0757-0279	0	1	RES 3.16K 1% .12	00746	CRB14 OR CRB25
A5 R341	0698-3155	1	1	RES 4.64K 1% .12	00746	CRB14 OR CRB25
A5 R342	0698-3446	3	1	RES 383 1% .125W	00746	CRB14 OR CRB25
A5 R343	0698-3158	4	1	RES 23.7K 1% .12	00746	CRB14 OR CRB25
A5 R344	0698-3268	7	1	RES 11.5K 1% .12	00746	CRB14 OR CRB25
A5 R345	0698-3136	8	1	RES 17.8K 1% .12	00746	CRB14 OR CRB25
A5 R346	0698-0085	0	1	RES 2.61K 1% .12	00746	CRB14 OR CRB25
A5 R347	0757-0280	3	1	RES 1K 1% .125W	00746	CRB14 OR CRB25
A5 R348	0698-3438	3	1	RES 147 1% .125W	00746	CRB14 OR CRB25
A5 R350	0757-0442	9	1	RES 10K 1% .125W	00746	CRB14 OR CRB25
A5 R351	0698-3460	1	1	RES 422K 1% .125	00746	CRB14 OR CRB25
A5 R362	0757-0394	0	1	RES 51.1 1% .125	00746	CRB14 OR CRB25
A5 R367	8159-0005	0	1	RES-ZERO OHMS	01339	L-2007-1
A5 R370	0698-3161	9	1	RES 38.3K 1% .12	00746	CRB14 OR CRB25
A5 R371	0757-0280	3	1	RES 1K 1% .125W	00746	CRB14 OR CRB25

Table B-7. 8130A Standard Timing Board Parts List (continued)

Reference	HP Part #	CD	Qty	Description	Manuf'r	Part #
A5 R373	0698-3446	3	1	RES 383 1% .125W	00746	CRB14 OR CRB25
A5 R375	0698-3159	5	1	RES 26.1K 1% .12	00746	CRB14 OR CRB25
A5 R376	0757-0283	6	1	RES 2K 1% .125W	00746	CRB14 OR CRB25
A5 R377	0757-0283	6	1	RES 2K 1% .125W	00746	CRB14 OR CRB25
A5 R378	0757-0283	6	1	RES 2K 1% .125W	00746	CRB14 OR CRB25
A5 R379	0757-0283	6	1	RES 2K 1% .125W	00746	CRB14 OR CRB25
A5 R381	0757-0283	6	1	RES 2K 1% .125W	00746	CRB14 OR CRB25
A5 R390	0757-0283	6	1	RES 2K 1% .125W	00746	CRB14 OR CRB25
A5 R391	0757-0283	6	1	RES 2K 1% .125W	00746	CRB14 OR CRB25
A5 R392	0757-0283	6	1	RES 2K 1% .125W	00746	CRB14 OR CRB25
A5 R394	0757-0283	6	1	RES 2K 1% .125W	00746	CRB14 OR CRB25
A5 R396	0757-0283	6	1	RES 2K 1% .125W	00746	CRB14 OR CRB25
A5 R400	0757-0442	9	1	RES 10K 1% .125W	00746	CRB14 OR CRB25
A5 R401	0757-0394	0	1	RES 51.1 1% .125	00746	CRB14 OR CRB25
A5 R402	0698-4425	0	1	RES 1.54K 1% .12	00746	CRB14 OR CRB25
A5 R403	0698-4422	7	1	RES 1.27K 1% .12	00746	CRB14 OR CRB25
A5 R404	0757-0280	3	1	RES 1K 1% .125W	00746	CRB14 OR CRB25
A5 R405	0757-0394	0	1	RES 51.1 1% .125	00746	CRB14 OR CRB25
A5 R406	0698-3438	3	1	RES 147 1% .125W	00746	CRB14 OR CRB25
A5 R409	0757-0394	0	1	RES 51.1 1% .125	00746	CRB14 OR CRB25
A5 R410	0757-0279	0	1	RES 3.16K 1% .12	00746	CRB14 OR CRB25
A5 R411	0698-6360	6	1	RES 10K .1% .125	00746	CRB14 OR CRB25
A5 R412	0699-1011	6	1	RES 3.32K .1% .1	00746	CRB14 OR CRB25
A5 R413	0698-3153	9	1	RES 3.83K 1% .12	00746	CRB14 OR CRB25
A5 R414	0757-0449	6	1	RES 20K 1% .125W	00746	CRB14 OR CRB25
A5 R415	0757-0449	6	1	RES 20K 1% .125W	00746	CRB14 OR CRB25
A5 R419	0757-0280	3	1	RES 1K 1% .125W	00746	CRB14 OR CRB25
A5 R420	0757-0279	0	1	RES 3.16K 1% .12	00746	CRB14 OR CRB25
A5 R421	0757-0279	0	1	RES 3.16K 1% .12	00746	CRB14 OR CRB25
A5 R422	0757-0424	7	1	RES 1.1K 1% .125	00746	CRB14 OR CRB25

Table B-7. 8130A Standard Timing Board Parts List (continued)

Reference	HP Part #	CD	Qty	Description	Manuf'r	Part #
A5 R423	0757-0279	0	1	RES 3.16K 1% .12	00746	CRB14 OR CRB25
A5 R424	0698-0085	0	1	RES 2.61K 1% .12	00746	CRB14 OR CRB25
A5 R425	0757-0278	9	1	RES 1.78K 1% .12	00746	CRB14 OR CRB25
A5 R426	0757-0280	3	1	RES 1K 1% .125W	00746	CRB14 OR CRB25
A5 R427	0757-0394	0	1	RES 51.1 1% .125	00746	CRB14 OR CRB25
A5 R428	0757-0394	0	1	RES 51.1 1% .125	00746	CRB14 OR CRB25
A5 R429	0757-0419	0	1	RES 681 1% .125W	00746	CRB14 OR CRB25
A5 R430	0698-6347	9	1	RES 1.5K .1% .12	00746	CRB14 OR CRB25
A5 R431	0698-6348	0	1	RES 3K .1% .125W	00746	CRB14 OR CRB25
A5 R433	0698-6347	9	1	RES 1.5K .1% .12	00746	CRB14 OR CRB25
A5 R434	0698-6616	5	1	RES 750 .1% .125	00746	CRB14 OR CRB25
A5 R435	0698-3438	3	1	RES 147 1% .125W	00746	CRB14 OR CRB25
A5 R436	0757-0394	0	1	RES 51.1 1% .125	00746	CRB14 OR CRB25
A5 R437	0698-6616	5	1	RES 750 .1% .125	00746	CRB14 OR CRB25
A5 R438	0757-0465	6		RES 100K 1% .125	00746	CRB14 OR CRB25
A5 R438*	0757-0463	4	1	RES 82.5K 1% .12	00746	CRB14 OR CRB25
A5 R440	0757-0279	0	1	RES 3.16K 1% .12	00746	CRB14 OR CRB25
A5 R441	0698-3155	1	1	RES 4.64K 1% .12	00746	CRB14 OR CRB25
A5 R442	0698-3446	3	1	RES 383 1% .125W	00746	CRB14 OR CRB25
A5 R443	0757-0462	3	1	RES 75K 1% .125W	00746	CRB14 OR CRB25
A5 R444	0698-3268	7	1	RES 11.5K 1% .12	00746	CRB14 OR CRB25
A5 R445	0698-3136	8	1	RES 17.8K 1% .12	00746	CRB14 OR CRB25
A5 R446	0698-0085	0	1	RES 2.61K 1% .12	00746	CRB14 OR CRB25
A5 R447	0757-0280	3	1	RES 1K 1% .125W	00746	CRB14 OR CRB25
A5 R448	0698-3438	3	1	RES 147 1% .125W	00746	CRB14 OR CRB25
A5 R450	0757-0442	9	1	RES 10K 1% .125W	00746	CRB14 OR CRB25
A5 R453	0757-0462	3		RES 75K 1% .125W	00746	CRB14 OR CRB25
A5 R453*	0698-3243	8	1	RES 178K 1% .125	00746	CRB14 OR CRB25
A5 R460	0757-0394	0	1	RES 51.1 1% .125	00746	CRB14 OR CRB25
A5 R461	0757-0394	0	1	RES 51.1 1% .125	00746	CRB14 OR CRB25

Table B-7. 8130A Standard Timing Board Parts List (continued)

Reference	HP Part #	CD	Qty	Description	Manuf'r	Part #
A5 R462	0757-0394	0	1	RES 51.1 1% .125	00746	CRB14 OR CRB25
A5 R467	8159-0005	0	1	RES-ZERO OHMS	01339	L-2007-1
A5 R470	0698-3158	4	1	RES 23.7K 1% .12	00746	CRB14 OR CRB25
A5 R471	0757-0280	3	1	RES 1K 1% .125W	00746	CRB14 OR CRB25
A5 R473	0698-3446	3	1	RES 383 1% .125W	00746	CRB14 OR CRB25
A5 R475	0698-3159	5	1	RES 26.1K 1% .12	00746	CRB14 OR CRB25
A5 R476	0757-0283	6	1	RES 2K 1% .125W	00746	CRB14 OR CRB25
A5 R477	0757-0283	6	1	RES 2K 1% .125W	00746	CRB14 OR CRB25
A5 R479	0757-0283	6	1	RES 2K 1% .125W	00746	CRB14 OR CRB25
A5 R480	0757-0283	6	1	RES 2K 1% .125W	00746	CRB14 OR CRB25
A5 R481	0757-0283	6	1	RES 2K 1% .125W	00746	CRB14 OR CRB25
A5 R486	0757-0465	6	1	RES 100K 1% .125	00746	CRB14 OR CRB25
A5 R490	0757-0283	6	1	RES 2K 1% .125W	00746	CRB14 OR CRB25
A5 R491	0757-0283	6	1	RES 2K 1% .125W	00746	CRB14 OR CRB25
A5 R492	0757-0283	6	1	RES 2K 1% .125W	00746	CRB14 OR CRB25
A5 R494	0757-0283	6	1	RES 2K 1% .125W	00746	CRB14 OR CRB25
A5 R496	0757-0283	6	1	RES 2K 1% .125W	00746	CRB14 OR CRB25
A5 R501	0757-0394	0	1	RES 51.1 1% .125	00746	CRB14 OR CRB25
A5 R502	0698-4425	0	1	RES 1.54K 1% .12	00746	CRB14 OR CRB25
A5 R503	0757-0422	5	1	RES 909 1% .125W	00746	CRB14 OR CRB25
A5 R504	0757-0280	3	1	RES 1K 1% .125W	00746	CRB14 OR CRB25
A5 R505	0757-0394	0	1	RES 51.1 1% .125	00746	CRB14 OR CRB25
A5 R506	0698-3438	3	1	RES 147 1% .125W	00746	CRB14 OR CRB25
A5 R509	0757-0394	0	1	RES 51.1 1% .125	00746	CRB14 OR CRB25
A5 R510	0757-0279	0	1	RES 3.16K 1% .12	00746	CRB14 OR CRB25
A5 R511	0698-6360	6	1	RES 10K .1% .125	00746	CRB14 OR CRB25
A5 R512	0699-1011	6	1	RES 3.32K .1% .1	00746	CRB14 OR CRB25
A5 R513	0698-3153	9	1	RES 3.83K 1% .12	00746	CRB14 OR CRB25
A5 R514	0757-0449	6	1	RES 20K 1% .125W	00746	CRB14 OR CRB25
A5 R515	0757-0449	6	1	RES 20K 1% .125W	00746	CRB14 OR CRB25

Table B-7. 8130A Standard Timing Board Parts List (continued)

Reference	HP Part #	CD	Qty	Description	Manuf'r	Part #
A5 R519	0757-0280	3	1	RES 1K 1% .125W	00746	CRB14 OR CRB25
A5 R520	0757-0279	0	1	RES 3.16K 1% .12	00746	CRB14 OR CRB25
A5 R521	0757-0279	0	1	RES 3.16K 1% .12	00746	CRB14 OR CRB25
A5 R522	0757-0317	7	1	RES 1.33K 1% .12	00746	CRB14 OR CRB25
A5 R523	0698-0084	9	1	RES 2.15K 1% .12	00746	CRB14 OR CRB25
A5 R524	0698-0085	0	1	RES 2.61K 1% .12	00746	CRB14 OR CRB25
A5 R525	0757-0278	9	1	RES 1.78K 1% .12	00746	CRB14 OR CRB25
A5 R526	0757-0280	3	1	RES 1K 1% .125W	00746	CRB14 OR CRB25
A5 R527	0757-0394	0	1	RES 51.1 1% .125	00746	CRB14 OR CRB25
A5 R528	0757-0394	0	1	RES 51.1 1% .125	00746	CRB14 OR CRB25
A5 R529	0757-0419	0	1	RES 681 1% .125W	00746	CRB14 OR CRB25
A5 R530	0698-6347	9	1	RES 1.5K .1% .12	00746	CRB14 OR CRB25
A5 R531	0698-6348	0	1	RES 3K .1% .125W	00746	CRB14 OR CRB25
A5 R533	0698-6347	9	1	RES 1.5K .1% .12	00746	CRB14 OR CRB25
A5 R534	0698-6616	5	1	RES 750 .1% .125	00746	CRB14 OR CRB25
A5 R535	0698-3438	3	1	RES 147 1% .125W	00746	CRB14 OR CRB25
A5 R536	0757-0394	0	1	RES 51.1 1% .125	00746	CRB14 OR CRB25
A5 R537	0698-6616	5	1	RES 750 .1% .125	00746	CRB14 OR CRB25
A5 R538	0757-0978	6	1	RES 95.3K 1% .12	00746	CRB14 OR CRB25
A5 R539	0698-3260	9	1	RES 464K 1% .125	00746	CRB14 OR CRB25
A5 R540	0757-0279	0	1	RES 3.16K 1% .12	00746	CRB14 OR CRB25
A5 R541	0698-3155	1	1	RES 4.64K 1% .12	00746	CRB14 OR CRB25
A5 R542	0698-3446	3	1	RES 383 1% .125W	00746	CRB14 OR CRB25
A5 R543	0757-0464	5	1	RES 90.9K 1% .12	00746	CRB14 OR CRB25
A5 R544	0698-3268	7	1	RES 11.5K 1% .12	00746	CRB14 OR CRB25
A5 R545	0698-3136	8	1	RES 17.8K 1% .12	00746	CRB14 OR CRB25
A5 R546	0698-0085	0	1	RES 2.61K 1% .12	00746	CRB14 OR CRB25
A5 R547	0757-0280	3	1	RES 1K 1% .125W	00746	CRB14 OR CRB25
A5 R548	0698-3438	3	1	RES 147 1% .125W	00746	CRB14 OR CRB25
A5 R550	0757-0442	9	1	RES 10K 1% .125W	00746	CRB14 OR CRB25

Table B-7. 8130A Standard Timing Board Parts List (continued)

Reference	HP Part #	CD	Qty	Description	Manuf'r	Part #
A5 R551	0698-8961	7	1	RES 909K 1% .125	00746	CRB14 OR CRB25
A5 R560	0757-0394	0	1	RES 51.1 1% .125	00746	CRB14 OR CRB25
A5 R567	8159-0005	0	1	RES-ZERO OHMS	01339	L-2007-1
A5 R570	0757-0449	6	1	RES 20K 1% .125W	00746	CRB14 OR CRB25
A5 R571	0757-0280	3	1	RES 1K 1% .125W	00746	CRB14 OR CRB25
A5 R573	0698-3446	3	1	RES 383 1% .125W	00746	CRB14 OR CRB25
A5 R575	0698-3159	5	1	RES 26.1K 1% .12	00746	CRB14 OR CRB25
A5 R576	0757-0283	6	1	RES 2K 1% .125W	00746	CRB14 OR CRB25
A5 R577	0757-0283	6	1	RES 2K 1% .125W	00746	CRB14 OR CRB25
A5 R579	0757-0283	6	1	RES 2K 1% .125W	00746	CRB14 OR CRB25
A5 R580	0757-0283	6	1	RES 2K 1% .125W	00746	CRB14 OR CRB25
A5 R581	0757-0283	6	1	RES 2K 1% .125W	00746	CRB14 OR CRB25
A5 R590	0757-0283	6	1	RES 2K 1% .125W	00746	CRB14 OR CRB25
A5 R591	0757-0283	6	1	RES 2K 1% .125W	00746	CRB14 OR CRB25
A5 R592	0757-0283	6	1	RES 2K 1% .125W	00746	CRB14 OR CRB25
A5 R594	0757-0283	6	1	RES 2K 1% .125W	00746	CRB14 OR CRB25
A5 R596	0757-0283	6	1	RES 2K 1% .125W	00746	CRB14 OR CRB25
A5 RA100	1810-0316	1	1	NETWORK-RES DIP	02483	761-3-R10K
A5 RT393	0837-0035	6	1	THERMISTOR DISC	05098	35D24
A5 RT493	0837-0035	6	1	THERMISTOR DISC	05098	35D24
A5 RT593	0837-0035	6	1	THERMISTOR DISC	05098	35D24
A5 TP200	0360-2264	6	1	TERM.-TEST POINT	10358	1095D
A5 TP311	0360-2264	6	1	TERM.-TEST POINT	10358	1095D
A5 TP312	0360-2264	6	1	TERM.-TEST POINT	10358	1095D
A5 TP323	0360-2264	6	1	TERM.-TEST POINT	10358	1095D
A5 TP324	0360-2264	6	1	TERM.-TEST POINT	10358	1095D
A5 TP411	0360-2264	6	1	TERM.-TEST POINT	10358	1095D
A5 TP423	0360-2264	6	1	TERM.-TEST POINT	10358	1095D
A5 TP424	0360-2264	6	1	TERM.-TEST POINT	10358	1095D
A5 TP511	0360-2264	6	1	TERM.-TEST POINT	10358	1095D

Table B-7. 8130A Standard Timing Board Parts List (continued)

Reference	HP Part #	CD	Qty	Description	Manuf'r	Part #
A5 TP512	0360-2264	6	1	TERM.-TEST POINT	10358	1095D
A5 TP523	0360-2264	6	1	TERM.-TEST POINT	10358	1095D
A5 TP524	0360-2264	6	1	TERM.-TEST POINT	10358	1095D
A5 U100	1820-3665	0	1	IC-MM74HCT245N	01698	SN74HCT245N
A5 U101	1820-3847	0	1	IC-MM74HCT138N	01698	SN74HCT138N
A5 U102	1820-3082	5	1	IC-MC74HC374N	01698	SN74HC374N
A5 U103	1820-3082	5	1	IC-MC74HC374N	01698	SN74HC374N
A5 U104	1820-3847	0	1	IC-MM74HCT138N	01698	SN74HCT138N
A5 U105	1820-3082	5	1	IC-MC74HC374N	01698	SN74HC374N
A5 U106	1820-3082	5	1	IC-MC74HC374N	01698	SN74HC374N
A5 U107	1820-3847	0	1	IC-MM74HCT138N	01698	SN74HCT138N
A5 U108	1820-3082	5	1	IC-MC74HC374N	01698	SN74HC374N
A5 U109	1820-3847	0	1	IC-MM74HCT138N	01698	SN74HCT138N
A5 U110	1820-3082	5	1	IC-MC74HC374N	01698	SN74HC374N
A5 U111	1820-3082	5	1	IC-MC74HC374N	01698	SN74HC374N
A5 U112	1818-3164	9	1	IC X2816BP	10572	X2816BP
A5 U200	1NB7-8008	1	1		28480	1NB7-8008
A5 U201	1826-0544	0	1	IC-V RGLTR	02037	
A5 U202	1820-3082	5	1	IC-MC74HC374N	01698	SN74HC374N
A5 U203	1826-0550	8	1	D/A 8-BIT	02910	DAC08EN
A5 U204	1820-0493	6	1	IC 307	03406	LM307N
A5 U300	1DP9-0002	0	1	IC T1671	28480	1DP9-0002
A5 U301	1DP6-0001	3	1	IC COUNTER 200M	28480	1DP6-0001
A5 U303	1820-4995	1	1	IC-TC74HC592P	06354	TC74HC592P
A5 U304	1820-4995	1	1	IC-TC74HC592P	06354	TC74HC592P
A5 U305	1820-5067	0	1	IC-74AC74PC	03406	74AC74PC
A5 U306	1820-5067	0	1	IC-74AC74PC	03406	74AC74PC
A5 U307	1820-3298	5	1	IC-MM74HC32N	02037	MC74HC32N
A5 U310	1826-1553	3	1	IC 1014	10858	LT1014DN
A5 U311	1826-0774	8	1	IC LM385BZ-1.2	03406	LM385BZ-1.2

Table B-7. 8130A Standard Timing Board Parts List (continued)

Reference	HP Part #	CD	Qty	Description	Manuf'r	Part #
A5 U312	1826-1341	7	1	D/A 12-DGT	03406	DAC1232LCD
A5 U313	1826-1409	8	1	IC 1013	10858	LT1013CN8
A5 U314	1826-0315	3	1	IC 348	03406	LM348N
A5 U318	1826-0916	0	1	ANLG SW AD7511DI	03285	AD7511DIKN
A5 U400	1DP9-0001	9	1	IC TIMG GEN 500	28480	1DP9-0001
A5 U401	1DP6-0001	3	1	IC COUNTER 200M	28480	1DP6-0001
A5 U410	1826-1553	3	1	IC 1014	10858	LT1014DN
A5 U411	1826-0774	8	1	IC LM385BZ-1.2	03406	LM385BZ-1.2
A5 U412	1826-1341	7	1	D/A 12-DGT	03406	DAC1232LCD
A5 U413	1826-1409	8	1	IC 1013	10858	LT1013CN8
A5 U414	1826-0315	3	1	IC 348	03406	LM348N
A5 U418	1826-0916	0	1	ANLG SW AD7511DI	03285	AD7511DIKN
A5 U500	1DP9-0001	9	1	IC TIMG GEN 500	28480	1DP9-0001
A5 U501	1DP6-0001	3	1	IC COUNTER 200M	28480	1DP6-0001
A5 U510	1826-1553	3	1	IC 1014	10858	LT1014DN
A5 U511	1826-0774	8	1	IC LM385BZ-1.2	03406	LM385BZ-1.2
A5 U512	1826-1341	7	1	D/A 12-DGT	03406	DAC1232LCD
A5 U513	1826-1409	8	1	IC 1013	10858	LT1013CN8
A5 U514	1826-0315	3	1	IC 348	03406	LM348N
A5 U518	1826-0916	0	1	ANLG SW AD7511DI	03285	AD7511DIKN
A5 VR300	1902-0955	9	1	DIO-ZNR 7.5V 5%	02037	
A5 VR400	1902-0955	9	1	DIO-ZNR 7.5V 5%	02037	
A5 VR500	1902-0955	9	1	DIO-ZNR 7.5V 5%	02037	
A5 W100	1258-0141	8	1	JUMPER-REM	01380	530153-2
A5 W300	08131-61650	4	1	CBL AY PC 15CM	28480	08131-61650
A5 W301	08130-61655	8	1	CBL AY TOUTIN	28480	08130-61655
A5 W400	08131-61672	0	1	CBL SET DELAY A	28480	08131-61672
A5 W500	08130-61670	7	1	CBL SET OUT 30-	28480	08130-61670

Main Power Board

Table B-8. 8130A Main Power Board Parts List

Reference	HP Part #	CD	Qty	Description	Manuf'r	Part #
A14	08131-66514	9	1	BD AY PWR MAIN	28480	08131-66514
A14C118	0180-3651	5	1	CAP 100uF 50 V	00493	KM50VB101M
A14C119	0180-3651	5	1	CAP 100uF 50 V	00493	KM50VB101M
A14C121	0160-6623	5	1	CAP 0.1uF 50 V	02010	SA115C104MAAH
A14C122	0160-6623	5	1	CAP 0.1uF 50 V	02010	SA115C104MAAH
A14C123	0160-6623	5	1	CAP 0.1uF 50 V	02010	SA115C104MAAH
A14CP101	0180-3411	5	1	CAP 25 V	08709	ECET 25R 153SW
A14CP102	0180-3411	5	1	CAP 25 V	08709	ECET 25R 153SW
A14CP103	0180-4049	7	1	CAP 16 V	00493	KME16VNSN27000M30X50
A14CP104	0180-4049	7	1	CAP 16 V	00493	KME16VNSN27000M30X50
A14CP105	0180-4050	0	1	CAP 10 V	00493	KME10VNSN39000M30X50
A14CP106	0180-4050	0	1	CAP 10 V	00493	KME10VNSN39000M30X50
A14CP107	0180-4049	7	1	CAP 16 V	00493	KME16VNSN27000M30X50
A14CP108	0180-4049	7	1	CAP 16 V	00493	KME16VNSN27000M30X50
A14CP109	0180-3411	5	1	CAP 25 V	08709	ECET 25R 153SW
A14CP110	0180-3411	5	1	CAP 25 V	08709	ECET 25R 153SW
A14CP111	0180-3006	4	1	CAP 35 V	00493	NM35VB10000Q
A14CP112	0180-3006	4	1	CAP 35 V	00493	NM35VB10000Q
A14CP113	0180-3469	3	1	CAP 100uF 25 V	00493	KMC25VB101M8X11LL
A14CP114	0180-3469	3	1	CAP 100uF 25 V	00493	KMC25VB101M8X11LL
A14CP115	0180-3469	3	1	CAP 100uF 25 V	00493	KMC25VB101M8X11LL
A14CP116	0180-3469	3	1	CAP 100uF 25 V	00493	KMC25VB101M8X11LL
A14CP117	0180-3469	3	1	CAP 100uF 25 V	00493	KMC25VB101M8X11LL

Table B-8. 8130A Main Power Board Parts List (continued)

Reference	HP Part #	CD	Qty	Description	Manuf'r	Part #
A14CP120	0180-2690	0	1	CAP 3.3uF 15 V	04200	150D335X9015A2
A14CR101	1901-1267	6	1	DIO-PWR RECT	03038	50SQ080
A14CR102	1901-1267	6	1	DIO-PWR RECT	03038	50SQ080
A14CR103	1901-1267	6	1	DIO-PWR RECT	03038	50SQ080
A14CR104	1901-1267	6	1	DIO-PWR RECT	03038	50SQ080
A14CR105	1906-0265	2	1	DIO-CT-RECT 45V	03038	12CTQ045
A14CR106	1906-0265	2	1	DIO-CT-RECT 45V	03038	12CTQ045
A14CR107	1901-0935	3	1	DIO-PWR RECT	03038	
A14CR108	1901-0935	3	1	DIO-PWR RECT	03038	
A14CR109	1901-0935	3	1	DIO-PWR RECT	03038	
A14CR110	1901-0935	3	1	DIO-PWR RECT	03038	
A14CR111	1901-0935	3	1	DIO-PWR RECT	03038	
A14CR112	1901-0935	3	1	DIO-PWR RECT	03038	
A14CR113	1901-0935	3	1	DIO-PWR RECT	03038	
A14CR114	1901-0935	3	1	DIO-PWR RECT	03038	
A14CR115	1901-1267	6	1	DIO-PWR RECT	03038	50SQ080
A14CR116	1901-1267	6	1	DIO-PWR RECT	03038	50SQ080
A14CR117	1901-1267	6	1	DIO-PWR RECT	03038	50SQ080
A14CR118	1901-1267	6	1	DIO-PWR RECT	03038	50SQ080
A14CR119	1901-1267	6	1	DIO-PWR RECT	03038	50SQ080
A14CR120	1901-1267	6	1	DIO-PWR RECT	03038	50SQ080
A14CR121	1901-1267	6	1	DIO-PWR RECT	03038	50SQ080
A14CR122	1901-1267	6	1	DIO-PWR RECT	03038	50SQ080
A14CR123	1901-0731	7	1	DIO-PWR RECT	02037	SR3010-3RL
A14CR124	1901-0731	7	1	DIO-PWR RECT	02037	SR3010-3RL
A14CR125	1901-1098	1	1	DIO-1N4150	00746	
A14F102	2110-0713	9	1	FU-SUBMIN 10A 12	04703	R251010T1
A14F103	2110-0713	9	1	FU-SUBMIN 10A 12	04703	R251010T1
A14F104	2110-0713	9	1	FU-SUBMIN 10A 12	04703	R251010T1
A14F105	2110-0713	9	1	FU-SUBMIN 10A 12	04703	R251010T1

Table B-8. 8130A Main Power Board Parts List (continued)

Reference	HP Part #	CD	Qty	Description	Manuf'r	Part #
A14F106	2110-0713	9	1	FU-SUBMIN 10A 12	04703	R251010T1
A14F107	2110-0713	9	1	FU-SUBMIN 10A 12	04703	R251010T1
A14F108	2110-0713	9	1	FU-SUBMIN 10A 12	04703	R251010T1
A14F109	2110-0713	9	1	FU-SUBMIN 10A 12	04703	R251010T1
A14J1	1251-8324	1	1	CONN-POST-TP-HDR	04486	G06M96P4BEBL-004-715
A14J2	1251-4547	2	1	CONN-POST-TP-HDR	01380	1-87227-0
A14J3	1251-4547	2	1	CONN-POST-TP-HDR	01380	1-87227-0
A14J4	1251-5153	8	1	CONN-SGL CONT	04880	836
A14J5	1251-5153	8	1	CONN-SGL CONT	04880	836
A14J6	1251-3751	8	1	CONN-POST-TP-HDR	03418	26-60-1080
A14J7	1251-3751	8	1	CONN-POST-TP-HDR	03418	26-60-1080
A14J8	1251-5383	6	1	CONN-POST-TP-HDR	03394	1102-8-102-01
A14MP101	08131-21103	8	1	H-SINK	28480	08131-21103
A14MP102	08131-21103	8	1	H-SINK	28480	08131-21103
A14MP103	08131-45401	9	1	INS 8XTO 220	28480	08131-45401
A14MP104	08131-45401	9	1	INS 8XTO 220	28480	08131-45401
A14Q101	1855-0499	5	1	MOSFET P-CHAN	03038	IRF9531
A14Q102	1855-0499	5	1	MOSFET P-CHAN	03038	IRF9531
A14Q103	1855-0645	3	1	MOSFET N-CHAN	02037	BUZ11
A14Q104	1855-0645	3	1	MOSFET N-CHAN	02037	BUZ11
A14Q105	1855-0645	3	1	MOSFET N-CHAN	02037	BUZ11
A14Q106	1855-0645	3	1	MOSFET N-CHAN	02037	BUZ11
A14Q107	1855-0548	5	1	MOSFET N-CHAN	02037	BUZ71A
A14Q108	1855-0548	5	1	MOSFET N-CHAN	02037	BUZ71A
A14Q109	1855-0645	3	1	MOSFET N-CHAN	02037	BUZ11
A14Q110	1855-0645	3	1	MOSFET N-CHAN	02037	BUZ11
A14Q111	1855-0548	5	1	MOSFET N-CHAN	02037	BUZ71A
A14Q112	1855-0548	5	1	MOSFET N-CHAN	02037	BUZ71A
A14R101	0757-0442	9	1	RES 10K 1% .125W	00746	CRB14 OR CRB25
A14R102	0757-0442	9	1	RES 10K 1% .125W	00746	CRB14 OR CRB25

Table B-8. 8130A Main Power Board Parts List (continued)

Reference	HP Part #	CD	Qty	Description	Manuf'r	Part #
A14R103	0757-0465	6	1	RES 100K 1% .125	00746	CRB14 OR CRB25
A14R104	0757-0465	6	1	RES 100K 1% .125	00746	CRB14 OR CRB25
A14R105	0757-0442	9	1	RES 10K 1% .125W	00746	CRB14 OR CRB25
A14R106	0757-0442	9	1	RES 10K 1% .125W	00746	CRB14 OR CRB25
A14R107	0698-3156	2	1	RES 14.7K 1% .12	00746	CRB14 OR CRB25
A14R108	0757-0442	9	1	RES 10K 1% .125W	00746	CRB14 OR CRB25
A14R109	0757-0442	9	1	RES 10K 1% .125W	00746	CRB14 OR CRB25
A14R110	0757-0442	9	1	RES 10K 1% .125W	00746	CRB14 OR CRB25
A14R111	0757-0442	9	1	RES 10K 1% .125W	00746	CRB14 OR CRB25
A14R112	0757-0442	9	1	RES 10K 1% .125W	00746	CRB14 OR CRB25
A14R113	0812-0111	7	1	RES .05 3% 3W PW	05524	RS-2B
A14R114	0812-0111	7	1	RES .05 3% 3W PW	05524	RS-2B
A14R115	0812-0111	7	1	RES .05 3% 3W PW	05524	RS-2B
A14R116	0812-0111	7	1	RES .05 3% 3W PW	05524	RS-2B
A14R117	0812-0111	7	1	RES .05 3% 3W PW	05524	RS-2B
A14R118	0811-3470	5	1	RES .1 3% 3W PWI	05524	CW-2B-39
A14R119	0698-6360	6	1	RES 10K .1% .125	00746	CRB14 OR CRB25
A14R120	0757-0466	7	1	RES 110K 1% .125	00746	CRB14 OR CRB25
A14R121	0698-6360	6	1	RES 10K .1% .125	00746	CRB14 OR CRB25
A14R122	0757-0416	7	1	RES 511 1% .125W	00746	CRB14 OR CRB25
A14R123	0698-3160	8	1	RES 31.6K 1% .12	00746	CRB14 OR CRB25
A14R124	0757-0283	6	1	RES 2K 1% .125W	00746	CRB14 OR CRB25
A14R125	0698-6348	0	1	RES 3K .1% .125W	00746	CRB14 OR CRB25
A14R126	0757-0465	6	1	RES 100K 1% .125	00746	CRB14 OR CRB25
A14R127	0698-0063	4	1	RES 5.23K 1% .12	00746	CRB14 OR CRB25
A14R128	0698-3132	4	1	RES 261 1% .125W	00746	CRB14 OR CRB25
A14R129	0757-0280	3	1	RES 1K 1% .125W	00746	CRB14 OR CRB25
A14TP101	0360-2264	6	1	TERM.-TEST POINT	10358	1095D
A14TP102	0360-2264	6	1	TERM.-TEST POINT	10358	1095D
A14U101	1826-1245	0	1	IC TL7702A	01698	TL7702A

Table B-8. 8130A Main Power Board Parts List (continued)

Reference	HP Part #	CD	Qty	Description	Manuf'r	Part #
A14U103	1826-0346	0	1	IC 358	03406	LM358N
A14U104	1826-0393	7	1	IC LM317T	01698	LM317KC
A14VR101	1902-0964	0	1	DIO-ZNR 18V 5%	02037	
A14VR102	1902-0964	0	1	DIO-ZNR 18V 5%	02037	
A14VR103	1902-0959	3	1	DIO-ZNR 11V 5%	02037	
A14VR104	1902-0968	4	1	DIO-ZNR 27V 5%	02037	

Channel 1 Board

Table B-9. 8130A Channel 1 Board Parts List

Reference	HP Part #	CD	Qty	Description	Manuf'r	Part #
A26	08130-66526	8	1	BD AY CHAN 1	28480	08130-66526
A26A16	08130-66416	8	1	BD AY SLOPE SMD	28480	08130-66416
A26C2	0160-4535	4	1	CAP 1uF 50 V	02010	SR305C105KAAH
A26C3	0160-5746	1	1	CAP 0.1uF 50 V	06121	B37987-T5104-M11
A26C4	0160-3873	1	1	CAP 4.7pF 200 V	06352	FD12C0G2D4R7D
A26C5	0160-3873	1	1	CAP 4.7pF 200 V	06352	FD12C0G2D4R7D
A26C6	0160-5746	1	1	CAP 0.1uF 50 V	06121	B37987-T5104-M11
A26C7	0160-5746	1	1	CAP 0.1uF 50 V	06121	B37987-T5104-M11
A26C8	0160-4535	4	1	CAP 1uF 50 V	02010	SR305C105KAAH
A26C11	0160-5746	1	1	CAP 0.1uF 50 V	06121	B37987-T5104-M11
A26C12	0160-5746	1	1	CAP 0.1uF 50 V	06121	B37987-T5104-M11
A26C13	0160-5735	8	1	CAP 10pF 100 V	06121	B37979-J1100-J34
A26C14	0160-5735	8	1	CAP 10pF 100 V	06121	B37979-J1100-J34
A26C15	0160-5735	8	1	CAP 10pF 100 V	06121	B37979-J1100-J34
A26C16	0160-4535	4	1	CAP 1uF 50 V	02010	SR305C105KAAH
A26C17*	0160-3873	1		CAP 4.7pF 200 V	06352	FD12C0G2D4R7D
A26C18*	0160-3873	1		CAP 4.7pF 200 V	06352	FD12C0G2D4R7D
A26C101	0160-6623	5	1	CAP 0.1uF 50 V	02010	SA115C104MAAH
A26C103	0160-5730	3	1	CAP 100pF 100 V	06121	B37979-J1101-J034
A26C104	0160-5730	3	1	CAP 100pF 100 V	06121	B37979-J1101-J034

Table B-9. 8130A Channel 1 Board Parts List (continued)

Reference	HP Part #	CD	Qty	Description	Manuf'r	Part #
A26C105	0160-5726	7	1	CAP 0.01uF 100 V	06121	B37987-J1103-M034
A26C106	0160-5726	7	1	CAP 0.01uF 100 V	06121	B37987-J1103-M034
A26C108	0160-6623	5	1	CAP 0.1uF 50 V	02010	SA115C104MAAH
A26C111	0160-5728	9	1	CAP 1000pF 100 V	06121	B37986-J1102-J034
A26C113	0160-5728	9	1	CAP 1000pF 100 V	06121	B37986-J1102-J034
A26C115	0160-5728	9	1	CAP 1000pF 100 V	06121	B37986-J1102-J034
A26C117	0160-5728	9	1	CAP 1000pF 100 V	06121	B37986-J1102-J034
A26C119	0160-5728	9	1	CAP 1000pF 100 V	06121	B37986-J1102-J034
A26C121	0160-5728	9	1	CAP 1000pF 100 V	06121	B37986-J1102-J034
A26C123	0160-6623	5	1	CAP 0.1uF 50 V	02010	SA115C104MAAH
A26C124	0160-6500	7	1	CAP 0.01uF 100 V	02010	SA101C103KAAH
A26C132	0160-6623	5	1	CAP 0.1uF 50 V	02010	SA115C104MAAH
A26C134	0160-6500	7	1	CAP 0.01uF 100 V	02010	SA101C103KAAH
A26C135	0160-5726	7	1	CAP 0.01uF 100 V	06121	B37987-J1103-M034
A26C136	0160-5746	1	1	CAP 0.1uF 50 V	06121	B37987-T5104-M11
A26C137	0160-5746	1	1	CAP 0.1uF 50 V	06121	B37987-T5104-M11
A26C150	0160-5746	1	1	CAP 0.1uF 50 V	06121	B37987-T5104-M11
A26C151	0160-6623	5	1	CAP 0.1uF 50 V	02010	SA115C104MAAH
A26C152	0160-6623	5	1	CAP 0.1uF 50 V	02010	SA115C104MAAH
A26C153	0160-6623	5	1	CAP 0.1uF 50 V	02010	SA115C104MAAH
A26C154	0160-5730	3	1	CAP 100pF 100 V	06121	B37979-J1101-J034
A26C155	0160-5730	3	1	CAP 100pF 100 V	06121	B37979-J1101-J034
A26C156	0160-5730	3	1	CAP 100pF 100 V	06121	B37979-J1101-J034
A26C157	0160-5730	3	1	CAP 100pF 100 V	06121	B37979-J1101-J034
A26C158	0160-5726	7	1	CAP 0.01uF 100 V	06121	B37987-J1103-M034
A26C159	0160-5726	7	1	CAP 0.01uF 100 V	06121	B37987-J1103-M034
A26C160	0160-6623	5	1	CAP 0.1uF 50 V	02010	SA115C104MAAH
A26C161	0160-6500	7	1	CAP 0.01uF 100 V	02010	SA101C103KAAH
A26C162	0160-6500	7	1	CAP 0.01uF 100 V	02010	SA101C103KAAH
A26C163	0160-4801	7	1	CAP 100pF 100 V	02010	SA102A101JAAH

Table B-9. 8130A Channel 1 Board Parts List (continued)

Reference	HP Part #	CD	Qty	Description	Manuf'r	Part #
A26C200	0160-6500	7	1	CAP 0.01uF 100 V	02010	SA101C103KAAH
A26C201	0160-5726	7	1	CAP 0.01uF 100 V	06121	B37987-J1103-M034
A26C202	0160-6623	5	1	CAP 0.1uF 50 V	02010	SA115C104MAAH
A26C203	0160-6623	5	1	CAP 0.1uF 50 V	02010	SA115C104MAAH
A26C204	0160-6623	5	1	CAP 0.1uF 50 V	02010	SA115C104MAAH
A26C205	0160-5726	7	1	CAP 0.01uF 100 V	06121	B37987-J1103-M034
A26C207	0160-6500	7	1	CAP 0.01uF 100 V	02010	SA101C103KAAH
A26C208	0160-6623	5	1	CAP 0.1uF 50 V	02010	SA115C104MAAH
A26C209	0160-5726	7	1	CAP 0.01uF 100 V	06121	B37987-J1103-M034
A26C210	0160-5726	7	1	CAP 0.01uF 100 V	06121	B37987-J1103-M034
A26C211	0160-5726	7	1	CAP 0.01uF 100 V	06121	B37987-J1103-M034
A26C212	0160-6500	7	1	CAP 0.01uF 100 V	02010	SA101C103KAAH
A26C214	0160-6623	5	1	CAP 0.1uF 50 V	02010	SA115C104MAAH
A26C215	0160-6623	5	1	CAP 0.1uF 50 V	02010	SA115C104MAAH
A26C216	0160-6623	5	1	CAP 0.1uF 50 V	02010	SA115C104MAAH
A26C218	0160-6623	5	1	CAP 0.1uF 50 V	02010	SA115C104MAAH
A26C300	0160-5746	1	1	CAP 0.1uF 50 V	06121	B37987-T5104-M11
A26C301	0160-5746	1	1	CAP 0.1uF 50 V	06121	B37987-T5104-M11
A26C302	0160-5728	9	1	CAP 1000pF 100 V	06121	B37986-J1102-J034
A26C303	0160-4535	4	1	CAP 1uF 50 V	02010	SR305C105KAAH
A26C304	0160-6623	5	1	CAP 0.1uF 50 V	02010	SA115C104MAAH
A26C305	0160-6623	5	1	CAP 0.1uF 50 V	02010	SA115C104MAAH
A26C306	0160-6623	5	1	CAP 0.1uF 50 V	02010	SA115C104MAAH
A26C307	0160-6623	5	1	CAP 0.1uF 50 V	02010	SA115C104MAAH
A26C308	0160-5746	1	1	CAP 0.1uF 50 V	06121	B37987-T5104-M11
A26C309	0160-6623	5	1	CAP 0.1uF 50 V	02010	SA115C104MAAH
A26C310	0160-6500	7	1	CAP 0.01uF 100 V	02010	SA101C103KAAH
A26C311	0160-6500	7	1	CAP 0.01uF 100 V	02010	SA101C103KAAH
A26C312	0160-5726	7	1	CAP 0.01uF 100 V	06121	B37987-J1103-M034
A26C313	0160-6500	7	1	CAP 0.01uF 100 V	02010	SA101C103KAAH

Table B-9. 8130A Channel 1 Board Parts List (continued)

Reference	HP Part #	CD	Qty	Description	Manuf'r	Part #
A26C314	0160-6500	7	1	CAP 0.01uF 100 V	02010	SA101C103KAAH
A26C315	0160-6500	7	1	CAP 0.01uF 100 V	02010	SA101C103KAAH
A26C316	0160-6500	7	1	CAP 0.01uF 100 V	02010	SA101C103KAAH
A26C317	0160-6500	7	1	CAP 0.01uF 100 V	02010	SA101C103KAAH
A26C318	0160-6623	5	1	CAP 0.1uF 50 V	02010	SA115C104MAAH
A26C319	0160-6623	5	1	CAP 0.1uF 50 V	02010	SA115C104MAAH
A26C320	0160-5746	1	1	CAP 0.1uF 50 V	06121	B37987-T5104-M11
A26C321	0160-5746	1	1	CAP 0.1uF 50 V	06121	B37987-T5104-M11
A26C323	0160-5730	3	1	CAP 100pF 100 V	06121	B37979-J1101-J034
A26C324	0160-5730	3	1	CAP 100pF 100 V	06121	B37979-J1101-J034
A26C326	0160-5746	1	1	CAP 0.1uF 50 V	06121	B37987-T5104-M11
A26C327	0160-5746	1	1	CAP 0.1uF 50 V	06121	B37987-T5104-M11
A26C328	0160-6623	5	1	CAP 0.1uF 50 V	02010	SA115C104MAAH
A26C329	0160-5746	1	1	CAP 0.1uF 50 V	06121	B37987-T5104-M11
A26C330	0160-5746	1	1	CAP 0.1uF 50 V	06121	B37987-T5104-M11
A26C331	0160-5746	1	1	CAP 0.1uF 50 V	06121	B37987-T5104-M11
A26C332	0160-5746	1	1	CAP 0.1uF 50 V	06121	B37987-T5104-M11
A26C333	0160-5726	7	1	CAP 0.01uF 100 V	06121	B37987-J1103-M034
A26C334	0160-5726	7	1	CAP 0.01uF 100 V	06121	B37987-J1103-M034
A26C335	0160-4535	4	1	CAP 1uF 50 V	02010	SR305C105KAAH
A26C400	0160-5726	7	1	CAP 0.01uF 100 V	06121	B37987-J1103-M034
A26C401	0160-5726	7	1	CAP 0.01uF 100 V	06121	B37987-J1103-M034
A26C402	0160-6623	5	1	CAP 0.1uF 50 V	02010	SA115C104MAAH
A26C403	0160-5726	7	1	CAP 0.01uF 100 V	06121	B37987-J1103-M034
A26C404	0160-5726	7	1	CAP 0.01uF 100 V	06121	B37987-J1103-M034
A26C405	0160-6623	5	1	CAP 0.1uF 50 V	02010	SA115C104MAAH
A26C406	0160-5726	7	1	CAP 0.01uF 100 V	06121	B37987-J1103-M034
A26C407	0160-5726	7	1	CAP 0.01uF 100 V	06121	B37987-J1103-M034
A26C409	0160-5726	7	1	CAP 0.01uF 100 V	06121	B37987-J1103-M034
A26C410	0160-6623	5	1	CAP 0.1uF 50 V	02010	SA115C104MAAH

Table B-9. 8130A Channel 1 Board Parts List (continued)

Reference	HP Part #	CD	Qty	Description	Manuf'r	Part #
A26C411	0160-5726	7	1	CAP 0.01uF 100 V	06121	B37987-J1103-M034
A26C412	0160-5726	7	1	CAP 0.01uF 100 V	06121	B37987-J1103-M034
A26C413	0160-5726	7	1	CAP 0.01uF 100 V	06121	B37987-J1103-M034
A26C414	0160-5726	7	1	CAP 0.01uF 100 V	06121	B37987-J1103-M034
A26C416	0160-5726	7	1	CAP 0.01uF 100 V	06121	B37987-J1103-M034
A26C417	0160-5726	7	1	CAP 0.01uF 100 V	06121	B37987-J1103-M034
A26C418	0160-6500	7	1	CAP 0.01uF 100 V	02010	SA101C103KAAH
A26C419	0160-5726	7	1	CAP 0.01uF 100 V	06121	B37987-J1103-M034
A26C420	0160-5726	7	1	CAP 0.01uF 100 V	06121	B37987-J1103-M034
A26C421	0160-5726	7	1	CAP 0.01uF 100 V	06121	B37987-J1103-M034
A26C422	0160-5726	7	1	CAP 0.01uF 100 V	06121	B37987-J1103-M034
A26C423	0160-5726	7	1	CAP 0.01uF 100 V	06121	B37987-J1103-M034
A26C424	0160-5726	7	1	CAP 0.01uF 100 V	06121	B37987-J1103-M034
A26C425	0160-5726	7	1	CAP 0.01uF 100 V	06121	B37987-J1103-M034
A26C426	0160-6623	5	1	CAP 0.1uF 50 V	02010	SA115C104MAAH
A26C427	0160-5726	7	1	CAP 0.01uF 100 V	06121	B37987-J1103-M034
A26C428	0160-5726	7	1	CAP 0.01uF 100 V	06121	B37987-J1103-M034
A26C429	0160-5746	1	1	CAP 0.1uF 50 V	06121	B37987-T5104-M11
A26C430	0160-5746	1	1	CAP 0.1uF 50 V	06121	B37987-T5104-M11
A26C431	0160-5746	1	1	CAP 0.1uF 50 V	06121	B37987-T5104-M11
A26C432	0160-5746	1	1	CAP 0.1uF 50 V	06121	B37987-T5104-M11
A26C433	0160-5746	1	1	CAP 0.1uF 50 V	06121	B37987-T5104-M11
A26C436	0160-5746	1	1	CAP 0.1uF 50 V	06121	B37987-T5104-M11
A26C437	0160-5726	7	1	CAP 0.01uF 100 V	06121	B37987-J1103-M034
A26C438	0160-5726	7	1	CAP 0.01uF 100 V	06121	B37987-J1103-M034
A26C900	0160-5726	7	1	CAP 0.01uF 100 V	06121	B37987-J1103-M034
A26C901	0160-5747	2	1	CAP 0.047uF 50 V	06121	B37987-J5473-M034
A26C902	0160-5726	7	1	CAP 0.01uF 100 V	06121	B37987-J1103-M034
A26C903	0160-5747	2	1	CAP 0.047uF 50 V	06121	B37987-J5473-M034
A26C904	0160-5726	7	1	CAP 0.01uF 100 V	06121	B37987-J1103-M034

Table B-9. 8130A Channel 1 Board Parts List (continued)

Reference	HP Part #	CD	Qty	Description	Manuf'r	Part #
A26C905	0160-6500	7	1	CAP 0.01uF 100 V	02010	SA101C103KAAH
A26C906	0160-6500	7	1	CAP 0.01uF 100 V	02010	SA101C103KAAH
A26C907	0160-6500	7	1	CAP 0.01uF 100 V	02010	SA101C103KAAH
A26C908	0160-6500	7	1	CAP 0.01uF 100 V	02010	SA101C103KAAH
A26C909	0160-6500	7	1	CAP 0.01uF 100 V	02010	SA101C103KAAH
A26C910	0160-6500	7	1	CAP 0.01uF 100 V	02010	SA101C103KAAH
A26C911	0160-6500	7	1	CAP 0.01uF 100 V	02010	SA101C103KAAH
A26C912	0160-5726	7	1	CAP 0.01uF 100 V	06121	B37987-J1103-M034
A26C913	0160-5726	7	1	CAP 0.01uF 100 V	06121	B37987-J1103-M034
A26CP1	0180-4129	4	1	CAP 1uF 35 V	04200	173D105X9035V
A26CP2	0180-4129	4	1	CAP 1uF 35 V	04200	173D105X9035V
A26CP110	0180-0116	1	1	CAP 6.8uF 35 V	04200	150D685X9035B2-DYS
A26CP112	0180-0374	3	1	CAP 10uF 20 V	04200	150D106X9020B2-DYS
A26CP114	0180-0374	3	1	CAP 10uF 20 V	04200	150D106X9020B2-DYS
A26CP116	0180-0116	1	1	CAP 6.8uF 35 V	04200	150D685X9035B2-DYS
A26CP118	0180-0116	1	1	CAP 6.8uF 35 V	04200	150D685X9035B2-DYS
A26CP120	0180-0374	3	1	CAP 10uF 20 V	04200	150D106X9020B2-DYS
A26CP121	0180-4129	4	1	CAP 1uF 35 V	04200	173D105X9035V
A26CP150	0180-4129	4	1	CAP 1uF 35 V	04200	173D105X9035V
A26CP200	0180-0374	3	1	CAP 10uF 20 V	04200	150D106X9020B2-DYS
A26CP300	0180-2979	8	1	CAP 220uF 16 V	00493	SM16VB221M10X12
A26CP301	0180-2979	8	1	CAP 220uF 16 V	00493	SM16VB221M10X12
A26CP302	0180-2979	8	1	CAP 220uF 16 V	00493	SM16VB221M10X12
A26CP303	0180-2979	8	1	CAP 220uF 16 V	00493	SM16VB221M10X12
A26CR1	1901-0535	9	1	DIO- SCHOTTKY SM	02062	50825511
A26CR2	1901-0535	9	1	DIO- SCHOTTKY SM	02062	50825511
A26CR3	1901-0535	9	1	DIO- SCHOTTKY SM	02062	50825511
A26CR4	1901-0535	9	1	DIO- SCHOTTKY SM	02062	50825511
A26CR100	1901-0535	9	1	DIO- SCHOTTKY SM	02062	50825511
A26CR101	1901-0535	9	1	DIO- SCHOTTKY SM	02062	50825511

Table B-9. 8130A Channel 1 Board Parts List (continued)

Reference	HP Part #	CD	Qty	Description	Manuf'r	Part #
A26CR102	1901-0535	9	1	DIO- SCHOTTKY SM	02062	50825511
A26CR150	1901-0033	2	1	DIO-GEN PRP	03406	
A26CR151	1901-0535	9	1	DIO- SCHOTTKY SM	02062	50825511
A26CR152	1901-0535	9	1	DIO- SCHOTTKY SM	02062	50825511
A26CR153	1901-0535	9	1	DIO- SCHOTTKY SM	02062	50825511
A26CR154	1901-0535	9	1	DIO- SCHOTTKY SM	02062	50825511
A26CR155	1901-0535	9	1	DIO- SCHOTTKY SM	02062	50825511
A26CR156	1901-0535	9	1	DIO- SCHOTTKY SM	02062	50825511
A26CR201	1901-0535	9	1	DIO- SCHOTTKY SM	02062	50825511
A26CR202	1901-0535	9	1	DIO- SCHOTTKY SM	02062	50825511
A26CR206	1901-0376	6	1	DIO-GEN PRP	00046	1N3595
A26CR207	1901-0376	6	1	DIO-GEN PRP	00046	1N3595
A26CR209	1901-0376	6	1	DIO-GEN PRP	00046	1N3595
A26CR210	1901-0376	6	1	DIO-GEN PRP	00046	1N3595
A26CR300	1901-1098	1	1	DIO-1N4150	00746	
A26CR301	1901-1098	1	1	DIO-1N4150	00746	
A26CR303	1901-1098	1	1	DIO-1N4150	00746	
A26CR305	1901-1098	1	1	DIO-1N4150	00746	
A26CR306	1901-0033	2	1	DIO-GEN PRP	03406	
A26CR307	1901-0535	9	1	DIO- SCHOTTKY SM	02062	50825511
A26CR400	1901-0535	9	1	DIO- SCHOTTKY SM	02062	50825511
A26CR401	1901-1098	1	1	DIO-1N4150	00746	
A26CR404	1901-0535	9	1	DIO- SCHOTTKY SM	02062	50825511
A26CR405	1901-0535	9	1	DIO- SCHOTTKY SM	02062	50825511
A26CR406	1901-0047	8	1	DIO-SWITCHING	03406	
A26CR901	1901-1098	1	1	DIO-1N4150	00746	
A26CR902	1901-1098	1	1	DIO-1N4150	00746	
A26CR906	1901-0033	2	1	DIO-GEN PRP	03406	
A26CR910	1901-1098	1	1	DIO-1N4150	00746	
A26CR911	1901-1098	1	1	DIO-1N4150	00746	

Table B-9. 8130A Channel 1 Board Parts List (continued)

Reference	HP Part #	CD	Qty	Description	Manuf'r	Part #
A26CR912	1901-1098	1	1	DIO-1N4150	00746	
A26CR913	1901-1098	1	1	DIO-1N4150	00746	
A26CR915	1901-1098	1	1	DIO-1N4150	00746	
A26CV1	0121-0491	1	1	CAP 30pF 5pF 50	09538	518-003 A 5-30
A26J1	1251-8324	1	1	CONN-POST-TP-HDR	04486	G06M96P4BEBL-004-715
A26J2	1250-2066	4	1	CONN-RF SMB	05769	51-051-0359
A26J3	1250-2066	4	1	CONN-RF SMB	05769	51-051-0359
A26J4	1252-3245	7	1	CONN ELAST 38	09922	NE 0.2P 38.5L 3.0H 3.6W
A26J5	1252-3244	6	1	CONN ELAST 38	09922	NE 0.4P 38.5L 3.5H 4.2W
A26J6	1252-2649	3	1	CONN ELAST 43LG	09922	NE 0.2P 43.0L 3.0H 3.6W
A26J7	1252-2647	1	1	CONN ELAST 0.4P	09922	NE 0.4P 43.0L 3.5H 4.2W
A26J8	1252-3244	6	1	CONN ELAST 38	09922	NE 0.4P 38.5L 3.5H 4.2W
A26J9	1252-3245	7	1	CONN ELAST 38	09922	NE 0.2P 38.5L 3.0H 3.6W
A26J10	1252-2647	1	1	CONN ELAST 0.4P	09922	NE 0.4P 43.0L 3.5H 4.2W
A26J11	1200-1475	2	1	SKT-STRP 17-CONT	06665	SL-117-T-12
A26J12	1200-1474	1	1	SKT-STRP 13-CONT	06665	SL-113-T-12
A26J13	1200-1473	0	1	SKT-STRP 10-CONT	06665	SL-110-T-12
A26J14	1200-1472	9	1	SKT-STRP 8-CONT	06665	SL-108-T-12
A26J15	1200-1471	8	1	SKT-STRP 6-CONT	06665	SL-106-T-12
A26J16	1252-2649	3	1	CONN ELAST 43LG	09922	NE 0.2P 43.0L 3.0H 3.6W
A26J100	1251-4682	6	1	CONN-POST-TP-HDR	03394	1102-1-103-02
A26J101	1251-4682	6	1	CONN-POST-TP-HDR	03394	1102-1-103-02
A26J300	1251-5380	3	1	CONN-POST-TP-HDR	02946	68000-602
A26K1	0490-1667	6	1	RLY 2C 12VDC	09809	RG2T-12V
A26K2	0490-1667	6	1	RLY 2C 12VDC	09809	RG2T-12V
A26K3	0490-1667	6	1	RLY 2C 12VDC	09809	RG2T-12V
A26K4	0490-1665	4	1	RLY 1C 12VDC	01850	RG1ET-12V
A26K5	0490-1665	4	1	RLY 1C 12VDC	01850	RG1ET-12V
A26K6	0490-1405	0	1	RLY 2C 12VDC	01850	DS2E-S-DC12V-C-H118
A26L1	5081-1973	5	1	INDUCTANCE 3BEA	28480	5081-1973

Table B-9. 8130A Channel 1 Board Parts List (continued)

Reference	HP Part #	CD	Qty	Description	Manuf'r	Part #
A26L2	5081-1973	5	1	INDUCTANCE 3BEA	28480	5081-1973
A26L3	5081-1973	5	1	INDUCTANCE 3BEA	28480	5081-1973
A26L4	5081-1973	5	1	INDUCTANCE 3BEA	28480	5081-1973
A26L7	9140-0114	4	1	L 10UH +-10%	03273	15M102K
A26L8	9140-0114	4	1	L 10UH +-10%	03273	15M102K
A26L100	9100-1788	6	1	CORE-FERRITE	02995	VK200 20/4B
A26L101	9100-1788	6	1	CORE-FERRITE	02995	VK200 20/4B
A26L102	9100-1788	6	1	CORE-FERRITE	02995	VK200 20/4B
A26L103	9100-1788	6	1	CORE-FERRITE	02995	VK200 20/4B
A26L104	9100-1788	6	1	CORE-FERRITE	02995	VK200 20/4B
A26L105	9100-1788	6	1	CORE-FERRITE	02995	VK200 20/4B
A26MP1	08130-00601	6	1	SHLD OUTP BD	28480	08130-00601
A26MP20	08130-21101	5	1	HEAT SINK	28480	08130-21101
A26MP21	08130-40502	0	1	HYBRID FRAME	28480	08130-40502
A26MP23	0340-1236	8	1	INSULATOR	28480	0340-1236
A26MP26	3050-0960	1	2	WASHER-SHLDR 3.0	05947	V5359
A26MP27	0515-0659	8	4	SCR-MACHINE	05610	
A26MP80	1400-1437	0	6	CLAMP-CABLE	11808	
A26MP108	1200-0541	1	1	SKT-IC-DIP 24-CO	01380	2-641604-1
A26MP302	1205-0295	2	1	HEAT SINK	02608	6107B-14
A26MP303	1205-0295	2	1	HEAT SINK	02608	6107B-14
A26MP304	0340-1074	2	1	INSUL-XSTR	05447	3223-07FR-58-AC
A26MP305	0340-1074	2	1	INSUL-XSTR	05447	3223-07FR-58-AC
A26MP400	1205-0213	4	1	HEAT SINK	02608	2228B
A26MP401	1205-0213	4	1	HEAT SINK	02608	2228B
A26MP402	1205-0213	4	1	HEAT SINK	02608	2228B
A26MP403	1205-0011	0	1	HEAT SINK	02608	2226B
A26MP407	1205-0213	4	1	HEAT SINK	02608	2228B
A26MP409	1205-0213	4	1	HEAT SINK	02608	2228B
A26MP904	1205-0213	4	1	HEAT SINK	02608	2228B

Table B-9. 8130A Channel 1 Board Parts List (continued)

Reference	HP Part #	CD	Qty	Description	Manuf'r	Part #
A26Q1	1854-1028	6	1	XSTR NPN SI	02037	2N3904
A26Q2	1854-1028	6	1	XSTR NPN SI	02037	2N3904
A26Q3	1854-1028	6	1	XSTR NPN SI	02037	2N3904
A26Q4	1854-1028	6	1	XSTR NPN SI	02037	2N3904
A26Q101	1854-0039	7	1	XSTR NPN 2N3053S	02037	2N3053S
A26Q102	1853-0569	6	1	XSTR PNP SI	02037	
A26Q200	1854-0583	6	1	XSTR NPN SI	02037	MPS-A18
A26Q201	1854-0583	6	1	XSTR NPN SI	02037	MPS-A18
A26Q202	1855-0309	6	1	MOSFET 2N4352 P-	02037	2N4352
A26Q203	1854-1028	6	1	XSTR NPN SI	02037	2N3904
A26Q204	1854-0477	7	1	XSTR NPN 2N2222A	02037	2N2222A
A26Q300	1854-0828	2	1	XSTR NPN SI	00039	NTD560
A26Q301	1853-0468	4	1	XSTR PNP SI DARL	02037	TIP-127
A26Q302	1853-0569	6	1	XSTR PNP SI	02037	
A26Q303	1853-0569	6	1	XSTR PNP SI	02037	
A26Q304	1853-0569	6	1	XSTR PNP SI	02037	
A26Q305	1853-0569	6	1	XSTR PNP SI	02037	
A26Q307	1854-1028	6	1	XSTR NPN SI	02037	2N3904
A26Q308	1853-0563	0	1	XSTR PNP SI	02037	2N3906(SEL)
A26Q309	1854-1028	6	1	XSTR NPN SI	02037	2N3904
A26Q400	1853-0051	1	1	XSTR PNP 2N4037	03799	2N4037
A26Q401	1854-0637	1	1	XSTR NPN 2N2219A	02037	2N2219A
A26Q402	1853-0314	9	1	XSTR PNP 2N2905A	02037	2N2905A
A26Q404	1854-0392	5	1	XSTR NPN SI	02037	2N5088
A26Q405	1854-0392	5	1	XSTR NPN SI	02037	2N5088
A26Q407	1854-0597	2	1	XSTR NPN 2N5943	02037	2N5943
A26Q408	1854-0392	5	1	XSTR NPN SI	02037	2N5088
A26Q409	1853-0314	9	1	XSTR PNP 2N2905A	02037	2N2905A
A26Q410	1853-0314	9	1	XSTR PNP 2N2905A	02037	2N2905A
A26Q411	1853-0314	9	1	XSTR PNP 2N2905A	02037	2N2905A

Table B-9. 8130A Channel 1 Board Parts List (continued)

Reference	HP Part #	CD	Qty	Description	Manuf'r	Part #
A26Q412	1853-0569	6	1	XSTR PNP SI	02037	
A26Q413	1853-0569	6	1	XSTR PNP SI	02037	
A26Q414	1854-0392	5	1	XSTR NPN SI	02037	2N5088
A26Q415	1854-0392	5	1	XSTR NPN SI	02037	2N5088
A26Q416	1854-1028	6	1	XSTR NPN SI	02037	2N3904
A26Q418	1853-0563	0	1	XSTR PNP SI	02037	2N3906(SEL)
A26Q419	1853-0569	6	1	XSTR PNP SI	02037	
A26Q421	1854-1028	6	1	XSTR NPN SI	02037	2N3904
A26Q900	1854-1028	6	1	XSTR NPN SI	02037	2N3904
A26Q901	1855-0751	2	1	MOSFET N-CHAN	02883	VN0808M
A26Q902	1855-0751	2	1	MOSFET N-CHAN	02883	VN0808M
A26Q903	1854-0637	1	1	XSTR NPN 2N2219A	02037	2N2219A
A26Q904	1853-0051	1	1	XSTR PNP 2N4037	03799	2N4037
A26Q905	1853-0563	0	1	XSTR PNP SI	02037	2N3906(SEL)
A26R2	0698-4453	4	1	RES 402 1% .125W	00746	CRB14 OR CRB25
A26R3	0757-0401	0	1	RES 100 1% .125W	00746	CRB14 OR CRB25
A26R4	0757-0401	0	1	RES 100 1% .125W	00746	CRB14 OR CRB25
A26R5	0698-4453	4	1	RES 402 1% .125W	00746	CRB14 OR CRB25
A26R6	0698-4435	2	1	RES 2.49K 1% .12	00746	CRB14 OR CRB25
A26R7	0698-4435	2	1	RES 2.49K 1% .12	00746	CRB14 OR CRB25
A26R8	0757-0999	1	1	RES 47.5 1% .5W	01074	H2
A26R9	0757-0999	1	1	RES 47.5 1% .5W	01074	H2
A26R12	0757-0389	3	1	RES 33.2 1% .125	00746	CRB14 OR CRB25
A26R13	0757-0389	3	1	RES 33.2 1% .125	00746	CRB14 OR CRB25
A26R14	0698-4409	0	1	RES 127 1% .125W	00746	CRB14 OR CRB25
A26R15	0757-0283	6	1	RES 2K 1% .125W	00746	CRB14 OR CRB25
A26R16	0757-0401	0	1	RES 100 1% .125W	00746	CRB14 OR CRB25
A26R17	0757-0401	0	1	RES 100 1% .125W	00746	CRB14 OR CRB25
A26R18	0757-0401	0	1	RES 100 1% .125W	00746	CRB14 OR CRB25
A26R19	0757-0401	0	1	RES 100 1% .125W	00746	CRB14 OR CRB25

Table B-9. 8130A Channel 1 Board Parts List (continued)

Reference	HP Part #	CD	Qty	Description	Manuf'r	Part #
A26R20	0757-0411	2	1	RES 332 1% .125W	00746	CRB14 OR CRB25
A26R21	0757-0411	2	1	RES 332 1% .125W	00746	CRB14 OR CRB25
A26R22	0757-0807	0	1	RES 274 1% .5W T	01074	H2
A26R23	0757-0807	0	1	RES 274 1% .5W T	01074	H2
A26R24	0699-2732	0	1	RES 59 1% 2W TF	05524	CPF-2 5900 F T-1
A26R25	0699-2732	0	1	RES 59 1% 2W TF	05524	CPF-2 5900 F T-1
A26R26	0757-0401	0	1	RES 100 1% .125W	00746	CRB14 OR CRB25
A26R27	0757-0401	0	1	RES 100 1% .125W	00746	CRB14 OR CRB25
A26R100	0757-0274	5	1	RES 1.21K 1% .12	00746	CRB14 OR CRB25
A26R101	0698-3444	1	1	RES 316 1% .125W	00746	CRB14 OR CRB25
A26R102	0698-6624	5	1	RES 2K .1% .125W	00746	CRB14 OR CRB25
A26R104	0698-0082	7	1	RES 464 1% .125W	00746	CRB14 OR CRB25
A26R105	0698-6624	5	1	RES 2K .1% .125W	00746	CRB14 OR CRB25
A26R106	0698-6360	6	1	RES 10K .1% .125	00746	CRB14 OR CRB25
A26R107	0698-4445	4	1	RES 5.76K 1% .12	00746	CRB14 OR CRB25
A26R108	0698-4479	4	1	RES 14K 1% .125W	00746	CRB14 OR CRB25
A26R109	0757-0442	9	1	RES 10K 1% .125W	00746	CRB14 OR CRB25
A26R110	0698-6360	6	1	RES 10K .1% .125	00746	CRB14 OR CRB25
A26R111	0757-0442	9	1	RES 10K 1% .125W	00746	CRB14 OR CRB25
A26R112	0757-0280	3	1	RES 1K 1% .125W	00746	CRB14 OR CRB25
A26R113	0757-0442	9	1	RES 10K 1% .125W	00746	CRB14 OR CRB25
A26R114	0757-0438	3	1	RES 5.11K 1% .12	00746	CRB14 OR CRB25
A26R115	0757-0449	6	1	RES 20K 1% .125W	00746	CRB14 OR CRB25
A26R116	0757-0442	9	1	RES 10K 1% .125W	00746	CRB14 OR CRB25
A26R126	0698-4479	4	1	RES 14K 1% .125W	00746	CRB14 OR CRB25
A26R150	0757-0461	2	1	RES 68.1K 1% .12	00746	CRB14 OR CRB25
A26R151	0757-0199	3	1	RES 21.5K 1% .12	00746	CRB14 OR CRB25
A26R152	0757-0465	6	1	RES 100K 1% .125	00746	CRB14 OR CRB25
A26R153	0698-8827	4	1	RES 1M 1% .125W	00746	CRB14 OR CRB25
A26R154	0757-0442	9	1	RES 10K 1% .125W	00746	CRB14 OR CRB25

Table B-9. 8130A Channel 1 Board Parts List (continued)

Reference	HP Part #	CD	Qty	Description	Manuf'r	Part #
A26R155	0757-0442	9	1	RES 10K 1% .125W	00746	CRB14 OR CRB25
A26R156	0757-0280	3	1	RES 1K 1% .125W	00746	CRB14 OR CRB25
A26R157	0698-8958	2	1	RES 511K 1% .125	00746	CRB14 OR CRB25
A26R158	0757-0442	9	1	RES 10K 1% .125W	00746	CRB14 OR CRB25
A26R159	0757-0449	6	1	RES 20K 1% .125W	00746	CRB14 OR CRB25
A26R160	0698-0084	9	1	RES 2.15K 1% .12	00746	CRB14 OR CRB25
A26R161	0757-0442	9	1	RES 10K 1% .125W	00746	CRB14 OR CRB25
A26R162	0757-0280	3	1	RES 1K 1% .125W	00746	CRB14 OR CRB25
A26R163	0698-8958	2	1	RES 511K 1% .125	00746	CRB14 OR CRB25
A26R164	0757-0438	3	1	RES 5.11K 1% .12	00746	CRB14 OR CRB25
A26R165	0757-0442	9	1	RES 10K 1% .125W	00746	CRB14 OR CRB25
A26R166	0757-0442	9	1	RES 10K 1% .125W	00746	CRB14 OR CRB25
A26R167	0757-0280	3	1	RES 1K 1% .125W	00746	CRB14 OR CRB25
A26R168	0698-8958	2	1	RES 511K 1% .125	00746	CRB14 OR CRB25
A26R169	0757-0442	9	1	RES 10K 1% .125W	00746	CRB14 OR CRB25
A26R170	0757-0280	3	1	RES 1K 1% .125W	00746	CRB14 OR CRB25
A26R171	0698-8958	2	1	RES 511K 1% .125	00746	CRB14 OR CRB25
A26R172	0757-0438	3	1	RES 5.11K 1% .12	00746	CRB14 OR CRB25
A26R173	0757-0442	9	1	RES 10K 1% .125W	00746	CRB14 OR CRB25
A26R174	0757-0280	3	1	RES 1K 1% .125W	00746	CRB14 OR CRB25
A26R175	0757-0280	3	1	RES 1K 1% .125W	00746	CRB14 OR CRB25
A26R176	0757-0280	3	1	RES 1K 1% .125W	00746	CRB14 OR CRB25
A26R177	0757-0280	3	1	RES 1K 1% .125W	00746	CRB14 OR CRB25
A26R178	0698-3152	8	1	RES 3.48K 1% .12	00746	CRB14 OR CRB25
A26R179	0757-0438	3	1	RES 5.11K 1% .12	00746	CRB14 OR CRB25
A26R180	0698-3152	8	1	RES 3.48K 1% .12	00746	CRB14 OR CRB25
A26R181	0757-0438	3	1	RES 5.11K 1% .12	00746	CRB14 OR CRB25
A26R182	0757-0438	3	1	RES 5.11K 1% .12	00746	CRB14 OR CRB25
A26R183	0757-0274	5	1	RES 1.21K 1% .12	00746	CRB14 OR CRB25
A26R184	0698-3452	1	1	RES 147K 1% .125	00746	CRB14 OR CRB25

Table B-9. 8130A Channel 1 Board Parts List (continued)

Reference	HP Part #	CD	Qty	Description	Manuf'r	Part #
A26R185	0757-0279	0	1	RES 3.16K 1% .12	00746	CRB14 OR CRB25
A26R186	0757-0438	3	1	RES 5.11K 1% .12	00746	CRB14 OR CRB25
A26R187	0757-0438	3	1	RES 5.11K 1% .12	00746	CRB14 OR CRB25
A26R188	0757-0442	9	1	RES 10K 1% .125W	00746	CRB14 OR CRB25
A26R189	0757-0442	9	1	RES 10K 1% .125W	00746	CRB14 OR CRB25
A26R190	0757-0442	9	1	RES 10K 1% .125W	00746	CRB14 OR CRB25
A26R191	0757-0442	9	1	RES 10K 1% .125W	00746	CRB14 OR CRB25
A26R192	0698-0084	9	1	RES 2.15K 1% .12	00746	CRB14 OR CRB25
A26R193	0757-0280	3	1	RES 1K 1% .125W	00746	CRB14 OR CRB25
A26R194	0757-0442	9	1	RES 10K 1% .125W	00746	CRB14 OR CRB25
A26R200	0757-0442	9	1	RES 10K 1% .125W	00746	CRB14 OR CRB25
A26R201	0757-0283	6	1	RES 2K 1% .125W	00746	CRB14 OR CRB25
A26R203	0757-0449	6	1	RES 20K 1% .125W	00746	CRB14 OR CRB25
A26R204	0698-3438	3	1	RES 147 1% .125W	00746	CRB14 OR CRB25
A26R206	0757-0283	6	1	RES 2K 1% .125W	00746	CRB14 OR CRB25
A26R207	0757-0283	6	1	RES 2K 1% .125W	00746	CRB14 OR CRB25
A26R208	0757-0199	3	1	RES 21.5K 1% .12	00746	CRB14 OR CRB25
A26R209	0757-0283	6	1	RES 2K 1% .125W	00746	CRB14 OR CRB25
A26R210	0698-0085	0	1	RES 2.61K 1% .12	00746	CRB14 OR CRB25
A26R212	0698-3155	1	1	RES 4.64K 1% .12	00746	CRB14 OR CRB25
A26R213	0698-3155	1	1	RES 4.64K 1% .12	00746	CRB14 OR CRB25
A26R214	0757-0442	9	1	RES 10K 1% .125W	00746	CRB14 OR CRB25
A26R215	0698-3155	1	1	RES 4.64K 1% .12	00746	CRB14 OR CRB25
A26R217	0757-0442	9	1	RES 10K 1% .125W	00746	CRB14 OR CRB25
A26R218	0757-0442	9	1	RES 10K 1% .125W	00746	CRB14 OR CRB25
A26R219	0757-0280	3	1	RES 1K 1% .125W	00746	CRB14 OR CRB25
A26R220	0757-0280	3	1	RES 1K 1% .125W	00746	CRB14 OR CRB25
A26R221	0698-0085	0	1	RES 2.61K 1% .12	00746	CRB14 OR CRB25
A26R222	0757-0403	2	1	RES 121 1% .125W	00746	CRB14 OR CRB25
A26R223	0757-0403	2	1	RES 121 1% .125W	00746	CRB14 OR CRB25

Table B-9. 8130A Channel 1 Board Parts List (continued)

Reference	HP Part #	CD	Qty	Description	Manuf'r	Part #
A26R225	0757-0274	5	1	RES 1.21K 1% .12	00746	CRB14 OR CRB25
A26R226	0757-0416	7	1	RES 511 1% .125W	00746	CRB14 OR CRB25
A26R227	0757-0416	7	1	RES 511 1% .125W	00746	CRB14 OR CRB25
A26R276	0698-3441	8	1	RES 215 1% .125W	00746	CRB14 OR CRB25
A26R300	0698-3449	6	1	RES 28.7K 1% .12	00746	CRB14 OR CRB25
A26R301	0757-0442	9	1	RES 10K 1% .125W	00746	CRB14 OR CRB25
A26R302	0757-0442	9	1	RES 10K 1% .125W	00746	CRB14 OR CRB25
A26R304	0698-8799	9	1	RES 21.5K .1% .1	00746	CRB14 OR CRB25
A26R307	8159-0005	0	1	RES-ZERO OHMS	01339	L-2007-1
A26R308	0757-0442	9	1	RES 10K 1% .125W	00746	CRB14 OR CRB25
A26R309	0757-0449	6	1	RES 20K 1% .125W	00746	CRB14 OR CRB25
A26R310	0757-0449	6	1	RES 20K 1% .125W	00746	CRB14 OR CRB25
A26R311	0757-0449	6	1	RES 20K 1% .125W	00746	CRB14 OR CRB25
A26R312	0757-0449	6	1	RES 20K 1% .125W	00746	CRB14 OR CRB25
A26R313	0757-0449	6	1	RES 20K 1% .125W	00746	CRB14 OR CRB25
A26R314	0757-0442	9	1	RES 10K 1% .125W	00746	CRB14 OR CRB25
A26R315	0757-0449	6	1	RES 20K 1% .125W	00746	CRB14 OR CRB25
A26R316	8159-0005	0	1	RES-ZERO OHMS	01339	L-2007-1
A26R317	0757-0280	3	1	RES 1K 1% .125W	00746	CRB14 OR CRB25
A26R318	0757-0280	3	1	RES 1K 1% .125W	00746	CRB14 OR CRB25
A26R319	0757-0280	3	1	RES 1K 1% .125W	00746	CRB14 OR CRB25
A26R320	0757-0280	3	1	RES 1K 1% .125W	00746	CRB14 OR CRB25
A26R321	0757-0421	4	1	RES 825 1% .125W	00746	CRB14 OR CRB25
A26R322	0699-1056	9	1	RES 825 .1% .125	00746	CRB14 OR CRB25
A26R323	0757-0283	6	1	RES 2K 1% .125W	00746	CRB14 OR CRB25
A26R324	0757-0416	7	1	RES 511 1% .125W	00746	CRB14 OR CRB25
A26R325	0757-0421	4	1	RES 825 1% .125W	00746	CRB14 OR CRB25
A26R326	0699-1056	9	1	RES 825 .1% .125	00746	CRB14 OR CRB25
A26R327	0757-0416	7	1	RES 511 1% .125W	00746	CRB14 OR CRB25
A26R328	0757-0461	2	1	RES 68.1K 1% .12	00746	CRB14 OR CRB25

Table B-9. 8130A Channel 1 Board Parts List (continued)

Reference	HP Part #	CD	Qty	Description	Manuf'r	Part #
A26R329	0698-8826	3	1	RES 825K 1% .125	00746	CRB14 OR CRB25
A26R330	0757-0409	8	1	RES 274 1% .125W	00746	CRB14 OR CRB25
A26R332	0757-0442	9	1	RES 10K 1% .125W	00746	CRB14 OR CRB25
A26R333	0698-3156	2	1	RES 14.7K 1% .12	00746	CRB14 OR CRB25
A26R334	0757-0409	8	1	RES 274 1% .125W	00746	CRB14 OR CRB25
A26R335	0757-0442	9	1	RES 10K 1% .125W	00746	CRB14 OR CRB25
A26R337	0757-0346	2	1	RES 10 1% .125W	00746	CRB14 OR CRB25
A26R338	0698-3156	2	1	RES 14.7K 1% .12	00746	CRB14 OR CRB25
A26R339	0698-3156	2	1	RES 14.7K 1% .12	00746	CRB14 OR CRB25
A26R340	0757-0283	6	1	RES 2K 1% .125W	00746	CRB14 OR CRB25
A26R341	0698-3156	2	1	RES 14.7K 1% .12	00746	CRB14 OR CRB25
A26R342	0757-0283	6	1	RES 2K 1% .125W	00746	CRB14 OR CRB25
A26R343	0699-2683	0	1	RES 274 .1% .125	00746	CRB14
A26R344	0699-2683	0	1	RES 274 .1% .125	00746	CRB14
A26R347	0757-0283	6	1	RES 2K 1% .125W	00746	CRB14 OR CRB25
A26R348	0757-0346	2	1	RES 10 1% .125W	00746	CRB14 OR CRB25
A26R351	8159-0005	0	1	RES-ZERO OHMS	01339	L-2007-1
A26R352	0757-0280	3	1	RES 1K 1% .125W	00746	CRB14 OR CRB25
A26R354	0698-6360	6	1	RES 10K .1% .125	00746	CRB14 OR CRB25
A26R355	0757-1094	9	1	RES 1.47K 1% .12	00746	CRB14 OR CRB25
A26R356	0757-1094	9	1	RES 1.47K 1% .12	00746	CRB14 OR CRB25
A26R357	0698-8827	4	1	RES 1M 1% .125W	00746	CRB14 OR CRB25
A26R358	0757-0401	0	1	RES 100 1% .125W	00746	CRB14 OR CRB25
A26R359	0757-0401	0	1	RES 100 1% .125W	00746	CRB14 OR CRB25
A26R360	0757-0442	9	1	RES 10K 1% .125W	00746	CRB14 OR CRB25
A26R361	0757-0442	9	1	RES 10K 1% .125W	00746	CRB14 OR CRB25
A26R362	0698-3279	0	1	RES 4.99K 1% .12	00746	CRB14 OR CRB25
A26R363	0757-0199	3	1	RES 21.5K 1% .12	00746	CRB14 OR CRB25
A26R364	0757-0199	3	1	RES 21.5K 1% .12	00746	CRB14 OR CRB25
A26R365	0698-8826	3	1	RES 825K 1% .125	00746	CRB14 OR CRB25

Table B-9. 8130A Channel 1 Board Parts List (continued)

Reference	HP Part #	CD	Qty	Description	Manuf'r	Part #
A26R366	0757-0442	9	1	RES 10K 1% .125W	00746	CRB14 OR CRB25
A26R367	0757-0274	5	1	RES 1.21K 1% .12	00746	CRB14 OR CRB25
A26R368	0757-0442	9	1	RES 10K 1% .125W	00746	CRB14 OR CRB25
A26R369	0757-0442	9	1	RES 10K 1% .125W	00746	CRB14 OR CRB25
A26R370	0698-8958	2	1	RES 511K 1% .125	00746	CRB14 OR CRB25
A26R371	0698-8958	2	1	RES 511K 1% .125	00746	CRB14 OR CRB25
A26R372	0757-0442	9	1	RES 10K 1% .125W	00746	CRB14 OR CRB25
A26R373	0757-0442	9	1	RES 10K 1% .125W	00746	CRB14 OR CRB25
A26R374	0698-3153	9	1	RES 3.83K 1% .12	00746	CRB14 OR CRB25
A26R377	0698-3441	8	1	RES 215 1% .125W	00746	CRB14 OR CRB25
A26R378	0698-3457	6	1	RES 316K 1% .125	00746	CRB14 OR CRB25
A26R379	0757-0407	6	1	RES 200 1% .125W	00746	CRB14 OR CRB25
A26R400	0757-0428	1	1	RES 1.62K 1% .12	00746	CRB14 OR CRB25
A26R401	0757-0442	9	1	RES 10K 1% .125W	00746	CRB14 OR CRB25
A26R405	8159-0005	0	1	RES-ZERO OHMS	01339	L-2007-1
A26R406	0757-0283	6	1	RES 2K 1% .125W	00746	CRB14 OR CRB25
A26R407	0757-0283	6	1	RES 2K 1% .125W	00746	CRB14 OR CRB25
A26R408	0698-0085	0	1	RES 2.61K 1% .12	00746	CRB14 OR CRB25
A26R410	0698-0084	9	1	RES 2.15K 1% .12	00746	CRB14 OR CRB25
A26R412	0698-3432	7	1	RES 26.1 1% .125	00746	CRB14 OR CRB25
A26R413	0698-4445	4	1	RES 5.76K 1% .12	00746	CRB14 OR CRB25
A26R414	0757-0416	7	1	RES 511 1% .125W	00746	CRB14 OR CRB25
A26R416	0757-0442	9	1	RES 10K 1% .125W	00746	CRB14 OR CRB25
A26R419	0757-0283	6	1	RES 2K 1% .125W	00746	CRB14 OR CRB25
A26R420	0698-3519	1	1	RES 12.4K 1% .12	00746	CRB14 OR CRB25
A26R423	0698-3444	1	1	RES 316 1% .125W	00746	CRB14 OR CRB25
A26R424	0757-0416	7	1	RES 511 1% .125W	00746	CRB14 OR CRB25
A26R425	0757-0441	8	1	RES 8.25K 1% .12	00746	CRB14 OR CRB25
A26R426	0757-0441	8	1	RES 8.25K 1% .12	00746	CRB14 OR CRB25
A26R427	0757-0416	7	1	RES 511 1% .125W	00746	CRB14 OR CRB25

Table B-9. 8130A Channel 1 Board Parts List (continued)

Reference	HP Part #	CD	Qty	Description	Manuf'r	Part #
A26R428	0698-3444	1	1	RES 316 1% .125W	00746	CRB14 OR CRB25
A26R429	0757-0280	3	1	RES 1K 1% .125W	00746	CRB14 OR CRB25
A26R430	0757-0280	3	1	RES 1K 1% .125W	00746	CRB14 OR CRB25
A26R431	0698-3444	1	1	RES 316 1% .125W	00746	CRB14 OR CRB25
A26R432	0757-0416	7	1	RES 511 1% .125W	00746	CRB14 OR CRB25
A26R433	0757-0411	2	1	RES 332 1% .125W	00746	CRB14 OR CRB25
A26R434	0757-0274	5	1	RES 1.21K 1% .12	00746	CRB14 OR CRB25
A26R435	0757-0280	3	1	RES 1K 1% .125W	00746	CRB14 OR CRB25
A26R436	0757-0280	3	1	RES 1K 1% .125W	00746	CRB14 OR CRB25
A26R437	0757-0274	5	1	RES 1.21K 1% .12	00746	CRB14 OR CRB25
A26R438	0698-3444	1	1	RES 316 1% .125W	00746	CRB14 OR CRB25
A26R439	0757-0416	7	1	RES 511 1% .125W	00746	CRB14 OR CRB25
A26R440	0757-0411	2	1	RES 332 1% .125W	00746	CRB14 OR CRB25
A26R441	8159-0005	0	1	RES-ZERO OHMS	01339	L-2007-1
A26R444	0757-0416	7	1	RES 511 1% .125W	00746	CRB14 OR CRB25
A26R445	0698-3443	0	1	RES 287 1% .125W	00746	CRB14 OR CRB25
A26R446	0757-0416	7	1	RES 511 1% .125W	00746	CRB14 OR CRB25
A26R447	0698-3443	0	1	RES 287 1% .125W	00746	CRB14 OR CRB25
A26R448	0757-0280	3	1	RES 1K 1% .125W	00746	CRB14 OR CRB25
A26R449	0757-0416	7	1	RES 511 1% .125W	00746	CRB14 OR CRB25
A26R450	0757-0291	6	1	RES 24.9 1% .125	00746	CRB14 OR CRB25
A26R451	0757-0291	6	1	RES 24.9 1% .125	00746	CRB14 OR CRB25
A26R452	0757-0291	6	1	RES 24.9 1% .125	00746	CRB14 OR CRB25
A26R453	0757-0279	0	1	RES 3.16K 1% .12	00746	CRB14 OR CRB25
A26R454	0698-4020	1	1	RES 9.53K 1% .12	00746	CRB14 OR CRB25
A26R455	0757-0416	7	1	RES 511 1% .125W	00746	CRB14 OR CRB25
A26R456	0757-0421	4	1	RES 825 1% .125W	00746	CRB14 OR CRB25
A26R457	0757-0416	7	1	RES 511 1% .125W	00746	CRB14 OR CRB25
A26R458	0757-0416	7	1	RES 511 1% .125W	00746	CRB14 OR CRB25
A26R459	0757-0416	7	1	RES 511 1% .125W	00746	CRB14 OR CRB25

Table B-9. 8130A Channel 1 Board Parts List (continued)

Reference	HP Part #	CD	Qty	Description	Manuf'r	Part #
A26R460	0698-3153	9	1	RES 3.83K 1% .12	00746	CRB14 OR CRB25
A26R464	0698-3158	4	1	RES 23.7K 1% .12	00746	CRB14 OR CRB25
A26R465	0757-0442	9	1	RES 10K 1% .125W	00746	CRB14 OR CRB25
A26R466	0698-3444	1	1	RES 316 1% .125W	00746	CRB14 OR CRB25
A26R467	0757-0442	9	1	RES 10K 1% .125W	00746	CRB14 OR CRB25
A26R468	0757-0418	9	1	RES 619 1% .125W	00746	CRB14 OR CRB25
A26R469	0698-3444	1	1	RES 316 1% .125W	00746	CRB14 OR CRB25
A26R470	0698-3444	1	1	RES 316 1% .125W	00746	CRB14 OR CRB25
A26R471	0698-3444	1	1	RES 316 1% .125W	00746	CRB14 OR CRB25
A26R472	0698-6323	1	1	RES 100 .1% .125	00746	CRB14 OR CRB25
A26R473	0698-6323	1	1	RES 100 .1% .125	00746	CRB14 OR CRB25
A26R474	0698-6323	1	1	RES 100 .1% .125	00746	CRB14 OR CRB25
A26R475	0698-6323	1	1	RES 100 .1% .125	00746	CRB14 OR CRB25
A26R476	0698-6323	1	1	RES 100 .1% .125	00746	CRB14 OR CRB25
A26R477	0698-6323	1	1	RES 100 .1% .125	00746	CRB14 OR CRB25
A26R478	0698-6323	1	1	RES 100 .1% .125	00746	CRB14 OR CRB25
A26R479	0698-3444	1	1	RES 316 1% .125W	00746	CRB14 OR CRB25
A26R480	0757-0279	0	1	RES 3.16K 1% .12	00746	CRB14 OR CRB25
A26R481	0698-3268	7	1	RES 11.5K 1% .12	00746	CRB14 OR CRB25
A26R482	0698-3444	1	1	RES 316 1% .125W	00746	CRB14 OR CRB25
A26R483	0698-3444	1	1	RES 316 1% .125W	00746	CRB14 OR CRB25
A26R485	0757-0280	3	1	RES 1K 1% .125W	00746	CRB14 OR CRB25
A26R486	0757-0279	0	1	RES 3.16K 1% .12	00746	CRB14 OR CRB25
A26R487	0757-0278	9	1	RES 1.78K 1% .12	00746	CRB14 OR CRB25
A26R488	0698-3446	3	1	RES 383 1% .125W	00746	CRB14 OR CRB25
A26R489	0698-4460	3	1	RES 649 1% .125W	00746	CRB14 OR CRB25
A26R490	0757-0317	7	1	RES 1.33K 1% .12	00746	CRB14 OR CRB25
A26R491	0757-0416	7	1	RES 511 1% .125W	00746	CRB14 OR CRB25
A26R492	0757-0416	7	1	RES 511 1% .125W	00746	CRB14 OR CRB25
A26R493	0698-3446	3	1	RES 383 1% .125W	00746	CRB14 OR CRB25

Table B-9. 8130A Channel 1 Board Parts List (continued)

Reference	HP Part #	CD	Qty	Description	Manuf'r	Part #
A26R494	0757-1094	9	1	RES 1.47K 1% .12	00746	CRB14 OR CRB25
A26R497	0757-0274	5	1	RES 1.21K 1% .12	00746	CRB14 OR CRB25
A26R498	0757-0442	9	1	RES 10K 1% .125W	00746	CRB14 OR CRB25
A26R900	0698-3136	8	1	RES 17.8K 1% .12	00746	CRB14 OR CRB25
A26R901	0698-0084	9	1	RES 2.15K 1% .12	00746	CRB14 OR CRB25
A26R902	0757-0442	9	1	RES 10K 1% .125W	00746	CRB14 OR CRB25
A26R903	0757-0442	9	1	RES 10K 1% .125W	00746	CRB14 OR CRB25
A26R905	0698-3446	3	1	RES 383 1% .125W	00746	CRB14 OR CRB25
A26R906	0757-0421	4	1	RES 825 1% .125W	00746	CRB14 OR CRB25
A26R907	0757-0444	1	1	RES 12.1K 1% .12	00746	CRB14 OR CRB25
A26R908	0757-0280	3	1	RES 1K 1% .125W	00746	CRB14 OR CRB25
A26R909	0757-0442	9	1	RES 10K 1% .125W	00746	CRB14 OR CRB25
A26R910	0698-6624	5	1	RES 2K .1% .125W	00746	CRB14 OR CRB25
A26R911	0698-6624	5	1	RES 2K .1% .125W	00746	CRB14 OR CRB25
A26R912	0757-0442	9	1	RES 10K 1% .125W	00746	CRB14 OR CRB25
A26R913	0757-0442	9	1	RES 10K 1% .125W	00746	CRB14 OR CRB25
A26R914	0698-0084	9	1	RES 2.15K 1% .12	00746	CRB14 OR CRB25
A26R915	0699-2684	1	1	RES 332 .1% .125	00746	CRB14
A26R916	0757-0442	9	1	RES 10K 1% .125W	00746	CRB14 OR CRB25
A26R917	0757-0442	9	1	RES 10K 1% .125W	00746	CRB14 OR CRB25
A26R918	0698-0085	0	1	RES 2.61K 1% .12	00746	CRB14 OR CRB25
A26R919	0757-0280	3	1	RES 1K 1% .125W	00746	CRB14 OR CRB25
A26R920	0757-0346	2	1	RES 10 1% .125W	00746	CRB14 OR CRB25
A26R921	0757-0715	9	1	RES 150 1% .25W	01074	H4
A26R922	0757-0438	3	1	RES 5.11K 1% .12	00746	CRB14 OR CRB25
A26R924	0757-0442	9	1	RES 10K 1% .125W	00746	CRB14 OR CRB25
A26R925	0757-0280	3	1	RES 1K 1% .125W	00746	CRB14 OR CRB25
A26R926	0698-0085	0	1	RES 2.61K 1% .12	00746	CRB14 OR CRB25
A26R927	0757-0280	3	1	RES 1K 1% .125W	00746	CRB14 OR CRB25
A26R928	0757-0280	3	1	RES 1K 1% .125W	00746	CRB14 OR CRB25

Table B-9. 8130A Channel 1 Board Parts List (continued)

Reference	HP Part #	CD	Qty	Description	Manuf'r	Part #
A26R929	0757-0442	9	1	RES 10K 1% .125W	00746	CRB14 OR CRB25
A26R930	0698-3435	0	1	RES 38.3 1% .125	00746	CRB14 OR CRB25
A26R931	0699-2731	9	1	RES 442 .1% .125	06118	MK2
A26R934	0757-0449	6	1	RES 20K 1% .125W	00746	CRB14 OR CRB25
A26R935	0757-0279	0	1	RES 3.16K 1% .12	00746	CRB14 OR CRB25
A26R936	0698-3243	8	1	RES 178K 1% .125	00746	CRB14 OR CRB25
A26R937	0757-0460	1	1	RES 61.9K 1% .12	00746	CRB14 OR CRB25
A26R939	0698-4477	2	1	RES 10.5K 1% .12	00746	CRB14 OR CRB25
A26R940	0757-0442	9	1	RES 10K 1% .125W	00746	CRB14 OR CRB25
A26R941	0757-0439	4	1	RES 6.81K 1% .12	00746	CRB14 OR CRB25
A26R942	0757-0416	7	1	RES 511 1% .125W	00746	CRB14 OR CRB25
A26R943	0698-3444	1	1	RES 316 1% .125W	00746	CRB14 OR CRB25
A26R944	0698-4445	4	1	RES 5.76K 1% .12	00746	CRB14 OR CRB25
A26R945	0698-3444	1	1	RES 316 1% .125W	00746	CRB14 OR CRB25
A26R946	0757-0438	3	1	RES 5.11K 1% .12	00746	CRB14 OR CRB25
A26R947	0757-0441	8	1	RES 8.25K 1% .12	00746	CRB14 OR CRB25
A26R948	0698-3444	1	1	RES 316 1% .125W	00746	CRB14 OR CRB25
A26R949	0698-0084	9	1	RES 2.15K 1% .12	00746	CRB14 OR CRB25
A26R950	0757-0283	6	1	RES 2K 1% .125W	00746	CRB14 OR CRB25
A26R951	0698-0085	0	1	RES 2.61K 1% .12	00746	CRB14 OR CRB25
A26R952	0757-0442	9	1	RES 10K 1% .125W	00746	CRB14 OR CRB25
A26R953	0698-0085	0	1	RES 2.61K 1% .12	00746	CRB14 OR CRB25
A26R954	0698-0085	0	1	RES 2.61K 1% .12	00746	CRB14 OR CRB25
A26R955	0757-0442	9	1	RES 10K 1% .125W	00746	CRB14 OR CRB25
A26R956	0757-1094	9	1	RES 1.47K 1% .12	00746	CRB14 OR CRB25
A26R957	0757-0416	7	1	RES 511 1% .125W	00746	CRB14 OR CRB25
A26R958	0698-3439	4	1	RES 178 1% .125W	00746	CRB14 OR CRB25
A26R959	0757-0416	7	1	RES 511 1% .125W	00746	CRB14 OR CRB25
A26R960	0757-0280	3	1	RES 1K 1% .125W	00746	CRB14 OR CRB25
A26R961	0757-0442	9	1	RES 10K 1% .125W	00746	CRB14 OR CRB25

Table B-9. 8130A Channel 1 Board Parts List (continued)

Reference	HP Part #	CD	Qty	Description	Manuf'r	Part #
A26R962	0757-0449	6	1	RES 20K 1% .125W	00746	CRB14 OR CRB25
A26R963	0698-3155	1	1	RES 4.64K 1% .12	00746	CRB14 OR CRB25
A26R964	0757-0280	3	1	RES 1K 1% .125W	00746	CRB14 OR CRB25
A26RA100	1810-0280	8	1	NETWORK-RES SIP	02483	750-101
A26RA300	1810-0691	5	1	NETWORK-RES DIP	01607	F16B103B
A26RA400	1810-0316	1	1	NETWORK-RES DIP	02483	761-3-R10K
A26RV1	2100-3345	8	1	RES-TRMR 10 10%	03744	3386P-Y46-100
A26RV100	2100-3211	7	1	RES-TRMR 1K 10%	03744	3386P-Y46-102
A26RV200	2100-0554	5	1	RES-TRMR 500 10%	03744	3386P-Y46-501
A26RV303	2100-3212	8	1	RES-TRMR 200 10%	03744	3386P-Y46-201
A26RV305	2100-3253	7	1	RES-TRMR 50K 10%	03744	3386P-Y46-503
A26RV306	2100-3253	7	1	RES-TRMR 50K 10%	03744	3386P-Y46-503
A26RV307	2100-3210	6	1	RES-TRMR 10K 10%	03744	3386P-Y46-103
A26RV308	2100-3409	5	1	RES-TRMR 20 10%	03744	3386P-Y46-200
A26RV309	2100-3409	5	1	RES-TRMR 20 10%	03744	3386P-Y46-200
A26RV401	2100-0554	5	1	RES-TRMR 500 10%	03744	3386P-Y46-501
A26RV402	2100-3252	6	1	RES-TRMR 5K 10%	03744	3386P-Y46-502
A26TP100	0360-2264	6	1	TERM.-TEST POINT	10358	1095D
A26TP101	0360-2264	6	1	TERM.-TEST POINT	10358	1095D
A26TP102	0360-2264	6	1	TERM.-TEST POINT	10358	1095D
A26TP103	0360-2264	6	1	TERM.-TEST POINT	10358	1095D
A26TP104	0360-2264	6	1	TERM.-TEST POINT	10358	1095D
A26TP105	0360-2264	6	1	TERM.-TEST POINT	10358	1095D
A26TP106	0360-2264	6	1	TERM.-TEST POINT	10358	1095D
A26TP108	0360-2264	6	1	TERM.-TEST POINT	10358	1095D
A26TP109	0360-2264	6	1	TERM.-TEST POINT	10358	1095D
A26TP110	0360-2264	6	1	TERM.-TEST POINT	10358	1095D
A26TP111	0360-2264	6	1	TERM.-TEST POINT	10358	1095D
A26TP112	0360-2264	6	1	TERM.-TEST POINT	10358	1095D
A26TP200	0360-2264	6	1	TERM.-TEST POINT	10358	1095D

Table B-9. 8130A Channel 1 Board Parts List (continued)

Reference	HP Part #	CD	Qty	Description	Manuf'r	Part #
A26TP201	0360-2264	6	1	TERM.-TEST POINT	10358	1095D
A26TP202	0360-2264	6	1	TERM.-TEST POINT	10358	1095D
A26TP300	0360-2264	6	1	TERM.-TEST POINT	10358	1095D
A26TP301	0360-2264	6	1	TERM.-TEST POINT	10358	1095D
A26TP401	0360-2264	6	1	TERM.-TEST POINT	10358	1095D
A26TP402	0360-2264	6	1	TERM.-TEST POINT	10358	1095D
A26U1	1NB7-8201	6	1		28480	1NB7-8201
A26U2	1820-2111	9	1	IC-INTERFACE	01698	SN75468N
A26U100	1820-3665	0	1	IC-MM74HCT245N	01698	SN74HCT245N
A26U101	1820-3847	0	1	IC-MM74HCT138N	01698	SN74HCT138N
A26U102	1820-3847	0	1	IC-MM74HCT138N	01698	SN74HCT138N
A26U103	1820-3082	5	1	IC-MC74HC374N	01698	SN74HC374N
A26U104	1818-3164	9	1	IC X2816BP	10572	X2816BP
A26U105	1820-3082	5	1	IC-MC74HC374N	01698	SN74HC374N
A26U106	1826-0409	6	1	IC MC1723L	02037	MC1723L
A26U107	1826-1869	4	1	D/A 12-BIT	03285	AD7537JN
A26U108	1826-0161	7	1	IC 324	02037	LM324N
A26U110	1820-3082	5	1	IC-MC74HC374N	01698	SN74HC374N
A26U150	1820-3373	7	1	IC-MM74HC221AN	03406	MM74HC221AN
A26U151	1820-3298	5	1	IC-MM74HC32N	02037	MC74HC32N
A26U152	1820-2924	2	1	IC-MC74HC02N	01698	SN74HC02N
A26U153	1820-3081	4	1	IC-MC74HC74N	01698	SN74HC74N
A26U154	1820-3081	4	1	IC-MC74HC74N	01698	SN74HC74N
A26U155	1820-3097	2	1	IC-MM74HC08N	02037	MC74HC08N
A26U156	1826-0600	9	1	IC 074A	01698	TL074ACN
A26U157	1826-0138	8	1	IC 339	01698	LM339N
A26U158	1858-0053	3	1	XSTR ARY 14P-DIP	02037	
A26U159	1858-0058	8	1	XSTR ARY 14P-DIP	02037	MPQ3906
A26U160	1820-3082	5	1	IC-MC74HC374N	01698	SN74HC374N
A26U161	1820-1315	3	1	ANLG MUXR MC1405	02037	MC14051BCP

Table B-9. 8130A Channel 1 Board Parts List (continued)

Reference	HP Part #	CD	Qty	Description	Manuf'r	Part #
A26U162	1826-0877	2	1	A/D 8-BIT	03285	AD7574KN
A26U163	1826-0161	7	1	IC 324	02037	LM324N
A26U164	1826-0161	7	1	IC 324	02037	LM324N
A26U165	1826-0139	9	1	IC 1458	02037	MC1458P1
A26U200	1826-1869	4	1	D/A 12-BIT	03285	AD7537JN
A26U201	1826-1553	3	1	IC 1014	10858	LT1014DN
A26U202	1826-1553	3	1	IC 1014	10858	LT1014DN
A26U203	1826-0501	9	1	ANLG MUXR MC1405	02037	MC14053BCP
A26U204	1826-0501	9	1	ANLG MUXR MC1405	02037	MC14053BCP
A26U300	1826-1553	3	1	IC 1014	10858	LT1014DN
A26U301	1826-1553	3	1	IC 1014	10858	LT1014DN
A26U302	1826-1553	3	1	IC 1014	10858	LT1014DN
A26U303	1826-0315	3	1	IC 348	03406	LM348N
A26U305	1826-1409	8	1	IC 1013	10858	LT1013CN8
A26U306	1826-0139	9	1	IC 1458	02037	MC1458P1
A26U400	1826-0161	7	1	IC 324	02037	LM324N
A26U401	1826-0161	7	1	IC 324	02037	LM324N
A26U402	1826-0161	7	1	IC 324	02037	LM324N
A26U403	1826-0161	7	1	IC 324	02037	LM324N
A26U404	1826-0161	7	1	IC 324	02037	LM324N
A26U405	1826-0501	9	1	ANLG MUXR MC1405	02037	MC14053BCP
A26U900	1826-1617	0	1	ANLG MUXR DG509A	02883	DG509ABK
A26U901	1858-0058	8	1	XSTR ARY 14P-DIP	02037	MPQ3906
A26U902	1858-0021	5	1	XSTR ARY 16P-DIP	03799	CA3083
A26U903	1826-0161	7	1	IC 324	02037	LM324N
A26U904	1826-0161	7	1	IC 324	02037	LM324N
A26VR1	1902-0953	7	1	DIO-ZNR 6.2V 5%	02037	SZ30035-11RL
A26VR2	1902-0953	7	1	DIO-ZNR 6.2V 5%	02037	SZ30035-11RL
A26VR3	1902-0944	6	1	DIO-ZNR 2.7V 5%	02037	
A26VR101	1902-0951	5	1	DIO-ZNR 5.1V 5%	02037	SZ30035-9RL

Table B-9. 8130A Channel 1 Board Parts List (continued)

Reference	HP Part #	CD	Qty	Description	Manuf'r	Part #
A26VR150	1902-0950	4	1	DIO-ZNR 4.7V 5%	02037	
A26VR151	1902-0950	4	1	DIO-ZNR 4.7V 5%	02037	
A26VR152	1902-0956	0	1	DIO-ZNR 8.2V 5%	02037	
A26VR200	1902-0944	6	1	DIO-ZNR 2.7V 5%	02037	
A26VR300	1902-0943	5	1	DIO-ZNR 2.4V 5%	02037	
A26VR301	1902-0943	5	1	DIO-ZNR 2.4V 5%	02037	
A26VR400	1902-0951	5	1	DIO-ZNR 5.1V 5%	02037	SZ30035-9RL
A26VR401	1902-0951	5	1	DIO-ZNR 5.1V 5%	02037	SZ30035-9RL
A26VR402	1902-0954	8	1	DIO-ZNR 6.8V 5%	02037	
A26VR403	1902-0935	5	1	DIO-ZNR 9.1V 5%	02037	
A26VR404	1902-0951	5	1	DIO-ZNR 5.1V 5%	02037	SZ30035-9RL
A26VR405	1902-0943	5	1	DIO-ZNR 2.4V 5%	02037	
A26VR900	1902-0962	8	1	DIO-ZNR 15V 5%	02037	
A26VR903	1902-0956	0	1	DIO-ZNR 8.2V 5%	02037	
A26VR904	1902-0956	0	1	DIO-ZNR 8.2V 5%	02037	
A26VR905	1902-0951	5	1	DIO-ZNR 5.1V 5%	02037	SZ30035-9RL
A26VR907	1902-0951	5	1	DIO-ZNR 5.1V 5%	02037	SZ30035-9RL
A26VR908	1902-0958	2	1	DIO-ZNR 10V 5%	02037	
A26VR909	1902-0945	7	1	DIO-ZNR 3V 5%	02037	SZ0035-3RL
A26VR914	1902-1378	2	1	DIO-ZNR 3.6V 5%	02037	
A26W100	1258-0141	8	1	JUMPER-REM	01380	530153-2
A26W101	1258-0141	8	1	JUMPER-REM	01380	530153-2
A26W300	1258-0141	8	1	JUMPER-REM	01380	530153-2

Master List
Option 020

Table B-10. 8130A Option 020 Instrument Parts List

Reference	HP Part #	CD	Qty	Description	Manuf'r	Part #
A0	8130A #	0	1	PULSE GEN 2CHAN	28480	8130A #020
A0 A1	08130-66521	7	1	BD AY KEY OPT	28480	08130-66521
A0 A5	08130-66525	1	1	BD AY TIMING OPT	28480	08130-66525
A0 A27	08130-66527	3	1	BD AY CHAN 2	28480	08130-66527
A0 MP13	08130-40201	6	1	PANEL FRONT OPT	28480	08130-40201
A0 W12	08130-61603	6	1	CBL AY OUTPUT	28480	08130-61603
A0 W13	08130-61603	6	1	CBL AY OUTPUT	28480	08130-61603

Table B-11. 8130A Option 020 Keyboard Parts List

Reference	HP Part #	CD	Qty	Description	Manuf'r	Part #
A1	08130-66521	7	1	BD AY KEY OPT	28480	08130-66521
A1 C2	0160-6623	5	1	CAP 0.1uF 50 V	02010	SA115C104MAAH
A1 C3	0160-6623	5	1	CAP 0.1uF 50 V	02010	SA115C104MAAH
A1 C4	0160-6623	5	1	CAP 0.1uF 50 V	02010	SA115C104MAAH
A1 CP1	0180-2207	5	1	CAP 100uF 10 V	04200	150D107X9010R2-DYS
A1 DS1	1990-1253	7	1	DISPLAY-NUM-SEG	01542	HDSP-H101
A1 DS2	1990-1253	7	1	DISPLAY-NUM-SEG	01542	HDSP-H101
A1 DS3	1990-1253	7	1	DISPLAY-NUM-SEG	01542	HDSP-H101
A1 DS4	1990-1253	7	1	DISPLAY-NUM-SEG	01542	HDSP-H101
A1 DS5	1990-1252	6	1	LED-LT BAR	01542	HLCP-B100
A1 DS6	1990-1278	6	1	LED-LMP	01542	HLMP-K155
A1 DS7	1990-1278	6	1	LED-LMP	01542	HLMP-K155
A1 DS8	1990-1254	8	1	LED-LMP	01542	HLMP-Q150 SELECTED
A1 DS10	1990-1254	8	1	LED-LMP	01542	HLMP-Q150 SELECTED
A1 DS11	1990-1254	8	1	LED-LMP	01542	HLMP-Q150 SELECTED
A1 DS12	1990-1254	8	1	LED-LMP	01542	HLMP-Q150 SELECTED
A1 DS13	1990-1254	8	1	LED-LMP	01542	HLMP-Q150 SELECTED
A1 DS14	1990-1254	8	1	LED-LMP	01542	HLMP-Q150 SELECTED
A1 DS15	1990-1254	8	1	LED-LMP	01542	HLMP-Q150 SELECTED
A1 DS16	1990-1254	8	1	LED-LMP	01542	HLMP-Q150 SELECTED
A1 DS17	1990-1254	8	1	LED-LMP	01542	HLMP-Q150 SELECTED
A1 DS18	1990-1254	8	1	LED-LMP	01542	HLMP-Q150 SELECTED
A1 DS19	1990-1254	8	1	LED-LMP	01542	HLMP-Q150 SELECTED
A1 DS21	1990-1278	6	1	LED-LMP	01542	HLMP-K155
A1 DS22	1990-1278	6	1	LED-LMP	01542	HLMP-K155
A1 DS24	1990-1278	6	1	LED-LMP	01542	HLMP-K155
A1 DS27	1990-1278	6	1	LED-LMP	01542	HLMP-K155

Table B-11. 8130A Option 020 Keyboard Parts List (continued)

Reference	HP Part #	CD	Qty	Description	Manuf'r	Part #
A1 DS28	1990-1278	6	1	LED-LMP	01542	HLMP-K155
A1 DS30	1990-1254	8	1	LED-LMP	01542	HLMP-Q150 SELECTED
A1 DS31	1990-1254	8	1	LED-LMP	01542	HLMP-Q150 SELECTED
A1 DS32	1990-1254	8	1	LED-LMP	01542	HLMP-Q150 SELECTED
A1 DS33	1990-1254	8	1	LED-LMP	01542	HLMP-Q150 SELECTED
A1 DS34	1990-1254	8	1	LED-LMP	01542	HLMP-Q150 SELECTED
A1 DS35	1990-1254	8	1	LED-LMP	01542	HLMP-Q150 SELECTED
A1 DS36	1990-1254	8	1	LED-LMP	01542	HLMP-Q150 SELECTED
A1 DS37	1990-1254	8	1	LED-LMP	01542	HLMP-Q150 SELECTED
A1 DS38	1990-1254	8	1	LED-LMP	01542	HLMP-Q150 SELECTED
A1 DS39	1990-1254	8	1	LED-LMP	01542	HLMP-Q150 SELECTED
A1 DS41	1990-1278	6	1	LED-LMP	01542	HLMP-K155
A1 DS42	1990-1278	6	1	LED-LMP	01542	HLMP-K155
A1 DS44	1990-1278	6	1	LED-LMP	01542	HLMP-K155
A1 DS47	1990-1278	6	1	LED-LMP	01542	HLMP-K155
A1 DS48	1990-1278	6	1	LED-LMP	01542	HLMP-K155
A1 DS51	1990-1278	6	1	LED-LMP	01542	HLMP-K155
A1 DS52	1990-1278	6	1	LED-LMP	01542	HLMP-K155
A1 DS53	1990-1278	6	1	LED-LMP	01542	HLMP-K155
A1 DS55	1990-1278	6	1	LED-LMP	01542	HLMP-K155
A1 DS56	1990-1278	6	1	LED-LMP	01542	HLMP-K155
A1 DS57	1990-1278	6	1	LED-LMP	01542	HLMP-K155
A1 DS61	1990-1254	8	1	LED-LMP	01542	HLMP-Q150 SELECTED
A1 DS62	1990-1254	8	1	LED-LMP	01542	HLMP-Q150 SELECTED
A1 DS63	1990-1254	8	1	LED-LMP	01542	HLMP-Q150 SELECTED
A1 DS64	1990-1254	8	1	LED-LMP	01542	HLMP-Q150 SELECTED
A1 DS65	1990-1278	6	1	LED-LMP	01542	HLMP-K155
A1 DS71	1990-1278	6	1	LED-LMP	01542	HLMP-K155
A1 DS72	1990-1278	6	1	LED-LMP	01542	HLMP-K155
A1 DS73	1990-1278	6	1	LED-LMP	01542	HLMP-K155

Table B-11. 8130A Option 020 Keyboard Parts List (continued)

Reference	HP Part #	CD	Qty	Description	Manuf'r	Part #
A1 DS74	1990-1278	6	1	LED-LMP	01542	HLMP-K155
A1 DS75	1990-1278	6	1	LED-LMP	01542	HLMP-K155
A1 DS76	1990-1278	6	1	LED-LMP	01542	HLMP-K155
A1 DS77	1990-1278	6	1	LED-LMP	01542	HLMP-K155
A1 DS81	1990-1278	6	1	LED-LMP	01542	HLMP-K155
A1 DS82	1990-1278	6	1	LED-LMP	01542	HLMP-K155
A1 DS83	1990-1278	6	1	LED-LMP	01542	HLMP-K155
A1 DS84	1990-1278	6	1	LED-LMP	01542	HLMP-K155
A1 DS91	1990-1278	6	1	LED-LMP	01542	HLMP-K155
A1 DS92	1990-1278	6	1	LED-LMP	01542	HLMP-K155
A1 DS93	1990-1278	6	1	LED-LMP	01542	HLMP-K155
A1 DS94	1990-1278	6	1	LED-LMP	01542	HLMP-K155
A1 J1	1252-0217	7	1	CONN-POST-TP-HDR	04726	3429-5202
A1 MP1	5041-4707	5	8	QTR COBLK	28480	5041-4707
A1 MP2	5041-0318	6	5	LK CAP PTY GRAY	28480	5041-0318
A1 MP3	5041-0309	5	5	CAP KEY QUARTER	28480	5041-0309
A1 MP4	5041-0507	5	1	QTR WGRN	28480	5041-0507
A1 MP5	5041-0726	0	1	KEY CAP LCL	28480	5041-0726
A1 MP6	1200-0654	7	1	SKT-IC 40-CONT	01380	2-641606-1
A1 MP7	1200-0899	2	1	SKT-STRP 8-CONT	04129	8-0511-10
A1 RA1	1810-0325	2	1	NETWORK-RES DIP	02483	761-3-R150
A1 RA2	1810-0338	7	1	NETWORK-RES DIP	02483	761-3-R100
A1 RA3	1810-0338	7	1	NETWORK-RES DIP	02483	761-3-R100
A1 RA4	1810-0275	1	1	NETWORK-RES SIP	02483	750-101
A1 RA5	1810-0275	1	1	NETWORK-RES SIP	02483	750-101
A1 S1	5060-9436	7	1	SW-PB SPST NO	04486	5560-9436
A1 S2	5060-9436	7	1	SW-PB SPST NO	04486	5560-9436
A1 S3	5060-9436	7	1	SW-PB SPST NO	04486	5560-9436
A1 S4	5060-9436	7	1	SW-PB SPST NO	04486	5560-9436
A1 S5	5060-9436	7	1	SW-PB SPST NO	04486	5560-9436

Table B-11. 8130A Option 020 Keyboard Parts List (continued)

Reference	HP Part #	CD	Qty	Description	Manuf'r	Part #
A1 S6	5060-9436	7	1	SW-PB SPST NO	04486	5560-9436
A1 S7	5060-9436	7	1	SW-PB SPST NO	04486	5560-9436
A1 S8	5060-9436	7	1	SW-PB SPST NO	04486	5560-9436
A1 S10	5060-9436	7	1	SW-PB SPST NO	04486	5560-9436
A1 S11	5060-9436	7	1	SW-PB SPST NO	04486	5560-9436
A1 S12	5060-9436	7	1	SW-PB SPST NO	04486	5560-9436
A1 S13	5060-9436	7	1	SW-PB SPST NO	04486	5560-9436
A1 S14	5060-9436	7	1	SW-PB SPST NO	04486	5560-9436
A1 S15	5060-9436	7	1	SW-PB SPST NO	04486	5560-9436
A1 S16	5060-9436	7	1	SW-PB SPST NO	04486	5560-9436
A1 S17	5060-9436	7	1	SW-PB SPST NO	04486	5560-9436
A1 S18	5060-9436	7	1	SW-PB SPST NO	04486	5560-9436
A1 S19	5060-9436	7	1	SW-PB SPST NO	04486	5560-9436
A1 S20	5060-9436	7	1	SW-PB SPST NO	04486	5560-9436
A1 S21	5060-9436	7	1	SW-PB SPST NO	04486	5560-9436
A1 S22	5060-9436	7	1	SW-PB SPST NO	04486	5560-9436
A1 S23	5060-9436	7	1	SW-PB SPST NO	04486	5560-9436
A1 S24	5060-9436	7	1	SW-PB SPST NO	04486	5560-9436
A1 S25	5060-9436	7	1	SW-PB SPST NO	04486	5560-9436
A1 S26	5060-9436	7	1	SW-PB SPST NO	04486	5560-9436
A1 S27	5060-9436	7	1	SW-PB SPST NO	04486	5560-9436
A1 S28	5060-9436	7	1	SW-PB SPST NO	04486	5560-9436
A1 S29	5060-9436	7	1	SW-PB SPST NO	04486	5560-9436
A1 S41	5060-9436	7	1	SW-PB SPST NO	04486	5560-9436
A1 S42	5060-9436	7	1	SW-PB SPST NO	04486	5560-9436
A1 S43	5060-9436	7	1	SW-PB SPST NO	04486	5560-9436
A1 S44	5060-9436	7	1	SW-PB SPST NO	04486	5560-9436
A1 S45	5060-9436	7	1	SW-PB SPST NO	04486	5560-9436
A1 S46	5060-9436	7	1	SW-PB SPST NO	04486	5560-9436
A1 S47	5060-9436	7	1	SW-PB SPST NO	04486	5560-9436

Table B-11. 8130A Option 020 Keyboard Parts List (continued)

Reference	HP Part #	CD	Qty	Description	Manuf'r	Part #
A1 S48	5060-9436	7	1	SW-PB SPST NO	04486	5560-9436
A1 S51	5060-9436	7	1	SW-PB SPST NO	04486	5560-9436
A1 S52	5060-9436	7	1	SW-PB SPST NO	04486	5560-9436
A1 S53	5060-9436	7	1	SW-PB SPST NO	04486	5560-9436
A1 S54	5060-9436	7	1	SW-PB SPST NO	04486	5560-9436
A1 U1	1820-3847	0	1	IC-MM74HCT138N	01698	SN74HCT138N
A1 U2	1820-3847	0	1	IC-MM74HCT138N	01698	SN74HCT138N
A1 U3	1820-3847	0	1	IC-MM74HCT138N	01698	SN74HCT138N
A1 U4	1820-3456	7	1	IC-MM74HCT244N	01698	SN74HCT244N
A1 U5	1820-3456	7	1	IC-MM74HCT244N	01698	SN74HCT244N
A1 U6	1858-0014	6	1	XSTR ARY 14P-DIP	02037	
A1 U7	1858-0014	6	1	XSTR ARY 14P-DIP	02037	
A1 U8	1858-0014	6	1	XSTR ARY 14P-DIP	02037	
A1 U9	1858-0014	6	1	XSTR ARY 14P-DIP	02037	

Table B-12. 8130A Option 020 Timing Board Parts List

Reference	HP Part #	CD	Qty	Description	Manuf'r	Part #
A5	08130-66525	1	1	BD AY TIMING OPT	28480	08130-66525
A5 C101	0160-5750	7	1	CAP 2200pF 100 V	06121	B37981-J1222-M034
A5 C103	0160-5750	7	1	CAP 2200pF 100 V	06121	B37981-J1222-M034
A5 C105	0160-5750	7	1	CAP 2200pF 100 V	06121	B37981-J1222-M034
A5 C107	0160-5750	7	1	CAP 2200pF 100 V	06121	B37981-J1222-M034
A5 C109	0160-5750	7	1	CAP 2200pF 100 V	06121	B37981-J1222-M034
A5 C110	0160-6623	5	1	CAP 0.1uF 50 V	02010	SA115C104MAAH
A5 C111	0160-6623	5	1	CAP 0.1uF 50 V	02010	SA115C104MAAH
A5 C112	0160-6623	5	1	CAP 0.1uF 50 V	02010	SA115C104MAAH
A5 C113	0160-6623	5	1	CAP 0.1uF 50 V	02010	SA115C104MAAH
A5 C117	0160-6623	5	1	CAP 0.1uF 50 V	02010	SA115C104MAAH
A5 C121	0160-6623	5	1	CAP 0.1uF 50 V	02010	SA115C104MAAH
A5 C122	0160-6623	5	1	CAP 0.1uF 50 V	02010	SA115C104MAAH
A5 C126	0160-6623	5	1	CAP 0.1uF 50 V	02010	SA115C104MAAH
A5 C127	0160-6623	5	1	CAP 0.1uF 50 V	02010	SA115C104MAAH
A5 C131	0160-6623	5	1	CAP 0.1uF 50 V	02010	SA115C104MAAH
A5 C140	0160-6623	5	1	CAP 0.1uF 50 V	02010	SA115C104MAAH
A5 C141	0160-6623	5	1	CAP 0.1uF 50 V	02010	SA115C104MAAH
A5 C142	0160-6623	5	1	CAP 0.1uF 50 V	02010	SA115C104MAAH
A5 C181	0160-5746	1	1	CAP 0.1uF 50 V	06121	B37987-T5104-M11
A5 C202	0160-6623	5	1	CAP 0.1uF 50 V	02010	SA115C104MAAH
A5 C203	0160-6623	5	1	CAP 0.1uF 50 V	02010	SA115C104MAAH
A5 C204	0160-6623	5	1	CAP 0.1uF 50 V	02010	SA115C104MAAH
A5 C205	0160-6500	7	1	CAP 0.01uF 100 V	02010	SA101C103KAAH

Table B-12. 8130A Option 020 Timing Board Parts List (continued)

Reference	HP Part #	CD	Qty	Description	Manuf'r	Part #
A5 C206	0160-6500	7	1	CAP 0.01uF 100 V	02010	SA101C103KAAH
A5 C207	0160-6623	5	1	CAP 0.1uF 50 V	02010	SA115C104MAAH
A5 C208	0160-6623	5	1	CAP 0.1uF 50 V	02010	SA115C104MAAH
A5 C209	0160-6500	7	1	CAP 0.01uF 100 V	02010	SA101C103KAAH
A5 C210	0160-6500	7	1	CAP 0.01uF 100 V	02010	SA101C103KAAH
A5 C220	0160-6500	7	1	CAP 0.01uF 100 V	02010	SA101C103KAAH
A5 C221	0160-6500	7	1	CAP 0.01uF 100 V	02010	SA101C103KAAH
A5 C222	0160-6500	7	1	CAP 0.01uF 100 V	02010	SA101C103KAAH
A5 C223	0160-5726	7	1	CAP 0.01uF 100 V	06121	B37987-J1103-M034
A5 C224	0160-5726	7	1	CAP 0.01uF 100 V	06121	B37987-J1103-M034
A5 C300	0160-5746	1	1	CAP 0.1uF 50 V	06121	B37987-T5104-M11
A5 C301	0160-6623	5	1	CAP 0.1uF 50 V	02010	SA115C104MAAH
A5 C303	0160-4535	4	1	CAP 1uF 50 V	02010	SR305C105KAAH
A5 C304	0160-5746	1	1	CAP 0.1uF 50 V	06121	B37987-T5104-M11
A5 C305	0160-5746	1	1	CAP 0.1uF 50 V	06121	B37987-T5104-M11
A5 C306	0160-5726	7	1	CAP 0.01uF 100 V	06121	B37987-J1103-M034
A5 C307	0160-6623	5	1	CAP 0.1uF 50 V	02010	SA115C104MAAH
A5 C308	0160-6623	5	1	CAP 0.1uF 50 V	02010	SA115C104MAAH
A5 C309	0160-6623	5	1	CAP 0.1uF 50 V	02010	SA115C104MAAH
A5 C310	0160-6623	5	1	CAP 0.1uF 50 V	02010	SA115C104MAAH
A5 C311	0160-5726	7	1	CAP 0.01uF 100 V	06121	B37987-J1103-M034
A5 C312	0160-6500	7	1	CAP 0.01uF 100 V	02010	SA101C103KAAH
A5 C313	0160-6500	7	1	CAP 0.01uF 100 V	02010	SA101C103KAAH
A5 C314	0160-6623	5	1	CAP 0.1uF 50 V	02010	SA115C104MAAH
A5 C315	0160-6623	5	1	CAP 0.1uF 50 V	02010	SA115C104MAAH
A5 C317	0160-6623	5	1	CAP 0.1uF 50 V	02010	SA115C104MAAH
A5 C318	0160-6623	5	1	CAP 0.1uF 50 V	02010	SA115C104MAAH
A5 C320	0160-6623	5	1	CAP 0.1uF 50 V	02010	SA115C104MAAH
A5 C321	0160-6500	7	1	CAP 0.01uF 100 V	02010	SA101C103KAAH
A5 C322	0160-6500	7	1	CAP 0.01uF 100 V	02010	SA101C103KAAH

Table B-12. 8130A Option 020 Timing Board Parts List (continued)

Reference	HP Part #	CD	Qty	Description	Manuf'r	Part #
A5 C324	0160-6623	5	1	CAP 0.1uF 50 V	02010	SA115C104MAAH
A5 C325	0160-5746	1	1	CAP 0.1uF 50 V	06121	B37987-T5104-M11
A5 C327	0160-6500	7	1	CAP 0.01uF 100 V	02010	SA101C103KAAH
A5 C328	0160-6500	7	1	CAP 0.01uF 100 V	02010	SA101C103KAAH
A5 C330	0160-6623	5	1	CAP 0.1uF 50 V	02010	SA115C104MAAH
A5 C331	0160-6623	5	1	CAP 0.1uF 50 V	02010	SA115C104MAAH
A5 C333	0160-6623	5	1	CAP 0.1uF 50 V	02010	SA115C104MAAH
A5 C335	0160-4535	4	1	CAP 1uF 50 V	02010	SR305C105KAAH
A5 C336	0160-6623	5	1	CAP 0.1uF 50 V	02010	SA115C104MAAH
A5 C340	0160-6623	5	1	CAP 0.1uF 50 V	02010	SA115C104MAAH
A5 C341	0160-5726	7	1	CAP 0.01uF 100 V	06121	B37987-J1103-M034
A5 C342	0160-6500	7	1	CAP 0.01uF 100 V	02010	SA101C103KAAH
A5 C343	0160-6500	7	1	CAP 0.01uF 100 V	02010	SA101C103KAAH
A5 C350	0160-6623	5	1	CAP 0.1uF 50 V	02010	SA115C104MAAH
A5 C360	0160-6623	5	1	CAP 0.1uF 50 V	02010	SA115C104MAAH
A5 C363	0160-6623	5	1	CAP 0.1uF 50 V	02010	SA115C104MAAH
A5 C399	0160-5741	6	1	CAP 47pF 100 V	06121	B37979-J1470-J034
A5 C400	0160-5746	1	1	CAP 0.1uF 50 V	06121	B37987-T5104-M11
A5 C401	0160-5746	1	1	CAP 0.1uF 50 V	06121	B37987-T5104-M11
A5 C403	0160-4535	4	1	CAP 1uF 50 V	02010	SR305C105KAAH
A5 C404	0160-6623	5	1	CAP 0.1uF 50 V	02010	SA115C104MAAH
A5 C405	0160-5746	1	1	CAP 0.1uF 50 V	06121	B37987-T5104-M11
A5 C406	0160-5726	7	1	CAP 0.01uF 100 V	06121	B37987-J1103-M034
A5 C411	0160-5726	7	1	CAP 0.01uF 100 V	06121	B37987-J1103-M034
A5 C412	0160-6500	7	1	CAP 0.01uF 100 V	02010	SA101C103KAAH
A5 C413	0160-6500	7	1	CAP 0.01uF 100 V	02010	SA101C103KAAH
A5 C414	0160-6623	5	1	CAP 0.1uF 50 V	02010	SA115C104MAAH
A5 C415	0160-6623	5	1	CAP 0.1uF 50 V	02010	SA115C104MAAH
A5 C417	0160-6623	5	1	CAP 0.1uF 50 V	02010	SA115C104MAAH
A5 C418	0160-6623	5	1	CAP 0.1uF 50 V	02010	SA115C104MAAH

Table B-12. 8130A Option 020 Timing Board Parts List (continued)

Reference	HP Part #	CD	Qty	Description	Manuf'r	Part #
A5 C420	0160-6623	5	1	CAP 0.1uF 50 V	02010	SA115C104MAAH
A5 C421	0160-6500	7	1	CAP 0.01uF 100 V	02010	SA101C103KAAH
A5 C422	0160-6500	7	1	CAP 0.01uF 100 V	02010	SA101C103KAAH
A5 C424	0160-6623	5	1	CAP 0.1uF 50 V	02010	SA115C104MAAH
A5 C425	0160-5746	1	1	CAP 0.1uF 50 V	06121	B37987-T5104-M11
A5 C427	0160-6500	7	1	CAP 0.01uF 100 V	02010	SA101C103KAAH
A5 C428	0160-6500	7	1	CAP 0.01uF 100 V	02010	SA101C103KAAH
A5 C430	0160-6623	5	1	CAP 0.1uF 50 V	02010	SA115C104MAAH
A5 C431	0160-6623	5	1	CAP 0.1uF 50 V	02010	SA115C104MAAH
A5 C433	0160-6623	5	1	CAP 0.1uF 50 V	02010	SA115C104MAAH
A5 C435	0160-4535	4	1	CAP 1uF 50 V	02010	SR305C105KAAH
A5 C436	0160-6623	5	1	CAP 0.1uF 50 V	02010	SA115C104MAAH
A5 C440	0160-6623	5	1	CAP 0.1uF 50 V	02010	SA115C104MAAH
A5 C441	0160-5726	7	1	CAP 0.01uF 100 V	06121	B37987-J1103-M034
A5 C442	0160-6500	7	1	CAP 0.01uF 100 V	02010	SA101C103KAAH
A5 C443	0160-6500	7	1	CAP 0.01uF 100 V	02010	SA101C103KAAH
A5 C450	0160-6623	5	1	CAP 0.1uF 50 V	02010	SA115C104MAAH
A5 C460	0160-6623	5	1	CAP 0.1uF 50 V	02010	SA115C104MAAH
A5 C465	0160-6623	5	1	CAP 0.1uF 50 V	02010	SA115C104MAAH
A5 C470	0160-3872	0	1	CAP 2.2pF 200 V	06352	FD12C0G2D2R2C
A5 C471	0160-3872	0	1	CAP 2.2pF 200 V	06352	FD12C0G2D2R2C
A5 C500	0160-5746	1	1	CAP 0.1uF 50 V	06121	B37987-T5104-M11
A5 C501	0160-5746	1	1	CAP 0.1uF 50 V	06121	B37987-T5104-M11
A5 C503	0160-4535	4	1	CAP 1uF 50 V	02010	SR305C105KAAH
A5 C504	0160-5746	1	1	CAP 0.1uF 50 V	06121	B37987-T5104-M11
A5 C505	0160-6623	5	1	CAP 0.1uF 50 V	02010	SA115C104MAAH
A5 C506	0160-5726	7	1	CAP 0.01uF 100 V	06121	B37987-J1103-M034
A5 C511	0160-5726	7	1	CAP 0.01uF 100 V	06121	B37987-J1103-M034
A5 C512	0160-6500	7	1	CAP 0.01uF 100 V	02010	SA101C103KAAH
A5 C513	0160-6500	7	1	CAP 0.01uF 100 V	02010	SA101C103KAAH

Table B-12. 8130A Option 020 Timing Board Parts List (continued)

Reference	HP Part #	CD	Qty	Description	Manuf'r	Part #
A5 C514	0160-6623	5	1	CAP 0.1uF 50 V	02010	SA115C104MAAH
A5 C515	0160-6623	5	1	CAP 0.1uF 50 V	02010	SA115C104MAAH
A5 C517	0160-6623	5	1	CAP 0.1uF 50 V	02010	SA115C104MAAH
A5 C518	0160-6623	5	1	CAP 0.1uF 50 V	02010	SA115C104MAAH
A5 C520	0160-6623	5	1	CAP 0.1uF 50 V	02010	SA115C104MAAH
A5 C521	0160-6500	7	1	CAP 0.01uF 100 V	02010	SA101C103KAAH
A5 C522	0160-6500	7	1	CAP 0.01uF 100 V	02010	SA101C103KAAH
A5 C524	0160-6623	5	1	CAP 0.1uF 50 V	02010	SA115C104MAAH
A5 C525	0160-5746	1	1	CAP 0.1uF 50 V	06121	B37987-T5104-M11
A5 C527	0160-6500	7	1	CAP 0.01uF 100 V	02010	SA101C103KAAH
A5 C528	0160-6500	7	1	CAP 0.01uF 100 V	02010	SA101C103KAAH
A5 C530	0160-6623	5	1	CAP 0.1uF 50 V	02010	SA115C104MAAH
A5 C531	0160-6623	5	1	CAP 0.1uF 50 V	02010	SA115C104MAAH
A5 C533	0160-6623	5	1	CAP 0.1uF 50 V	02010	SA115C104MAAH
A5 C535	0160-4535	4	1	CAP 1uF 50 V	02010	SR305C105KAAH
A5 C536	0160-6623	5	1	CAP 0.1uF 50 V	02010	SA115C104MAAH
A5 C540	0160-6623	5	1	CAP 0.1uF 50 V	02010	SA115C104MAAH
A5 C541	0160-5726	7	1	CAP 0.01uF 100 V	06121	B37987-J1103-M034
A5 C542	0160-6500	7	1	CAP 0.01uF 100 V	02010	SA101C103KAAH
A5 C543	0160-6500	7	1	CAP 0.01uF 100 V	02010	SA101C103KAAH
A5 C550	0160-6623	5	1	CAP 0.1uF 50 V	02010	SA115C104MAAH
A5 C560	0160-6623	5	1	CAP 0.1uF 50 V	02010	SA115C104MAAH
A5 C565	0160-6623	5	1	CAP 0.1uF 50 V	02010	SA115C104MAAH
A5 C570	0160-3872	0	1	CAP 2.2pF 200 V	06352	FD12C0G2D2R2C
A5 C571	0160-3872	0	1	CAP 2.2pF 200 V	06352	FD12C0G2D2R2C
A5 C600	0160-5746	1	1	CAP 0.1uF 50 V	06121	B37987-T5104-M11
A5 C601	0160-5746	1	1	CAP 0.1uF 50 V	06121	B37987-T5104-M11
A5 C603	0160-4535	4	1	CAP 1uF 50 V	02010	SR305C105KAAH
A5 C604	0160-5746	1	1	CAP 0.1uF 50 V	06121	B37987-T5104-M11
A5 C605	0160-6623	5	1	CAP 0.1uF 50 V	02010	SA115C104MAAH

Table B-12. 8130A Option 020 Timing Board Parts List (continued)

Reference	HP Part #	CD	Qty	Description	Manuf'r	Part #
A5 C606	0160-5726	7	1	CAP 0.01uF 100 V	06121	B37987-J1103-M034
A5 C611	0160-5726	7	1	CAP 0.01uF 100 V	06121	B37987-J1103-M034
A5 C612	0160-6500	7	1	CAP 0.01uF 100 V	02010	SA101C103KAAH
A5 C613	0160-6500	7	1	CAP 0.01uF 100 V	02010	SA101C103KAAH
A5 C614	0160-6623	5	1	CAP 0.1uF 50 V	02010	SA115C104MAAH
A5 C615	0160-6623	5	1	CAP 0.1uF 50 V	02010	SA115C104MAAH
A5 C617	0160-6623	5	1	CAP 0.1uF 50 V	02010	SA115C104MAAH
A5 C618	0160-6623	5	1	CAP 0.1uF 50 V	02010	SA115C104MAAH
A5 C620	0160-6623	5	1	CAP 0.1uF 50 V	02010	SA115C104MAAH
A5 C621	0160-6500	7	1	CAP 0.01uF 100 V	02010	SA101C103KAAH
A5 C622	0160-6500	7	1	CAP 0.01uF 100 V	02010	SA101C103KAAH
A5 C624	0160-6623	5	1	CAP 0.1uF 50 V	02010	SA115C104MAAH
A5 C625	0160-5746	1	1	CAP 0.1uF 50 V	06121	B37987-T5104-M11
A5 C627	0160-6500	7	1	CAP 0.01uF 100 V	02010	SA101C103KAAH
A5 C628	0160-6500	7	1	CAP 0.01uF 100 V	02010	SA101C103KAAH
A5 C630	0160-6623	5	1	CAP 0.1uF 50 V	02010	SA115C104MAAH
A5 C631	0160-6623	5	1	CAP 0.1uF 50 V	02010	SA115C104MAAH
A5 C633	0160-6623	5	1	CAP 0.1uF 50 V	02010	SA115C104MAAH
A5 C635	0160-4535	4	1	CAP 1uF 50 V	02010	SR305C105KAAH
A5 C636	0160-6623	5	1	CAP 0.1uF 50 V	02010	SA115C104MAAH
A5 C640	0160-6623	5	1	CAP 0.1uF 50 V	02010	SA115C104MAAH
A5 C641	0160-5726	7	1	CAP 0.01uF 100 V	06121	B37987-J1103-M034
A5 C642	0160-6500	7	1	CAP 0.01uF 100 V	02010	SA101C103KAAH
A5 C643	0160-6500	7	1	CAP 0.01uF 100 V	02010	SA101C103KAAH
A5 C650	0160-6623	5	1	CAP 0.1uF 50 V	02010	SA115C104MAAH
A5 C660	0160-6623	5	1	CAP 0.1uF 50 V	02010	SA115C104MAAH
A5 C665	0160-6623	5	1	CAP 0.1uF 50 V	02010	SA115C104MAAH
A5 C670	0160-3872	0	1	CAP 2.2pF 200 V	06352	FD12C0G2D2R2C
A5 C671	0160-3872	0	1	CAP 2.2pF 200 V	06352	FD12C0G2D2R2C
A5 C700	0160-5746	1	1	CAP 0.1uF 50 V	06121	B37987-T5104-M11

Table B-12. 8130A Option 020 Timing Board Parts List (continued)

Reference	HP Part #	CD	Qty	Description	Manuf'r	Part #
A5 C701	0160-5746	1	1	CAP 0.1uF 50 V	06121	B37987-T5104-M11
A5 C703	0160-4535	4	1	CAP 1uF 50 V	02010	SR305C105KAAH
A5 C704	0160-5746	1	1	CAP 0.1uF 50 V	06121	B37987-T5104-M11
A5 C705	0160-5746	1	1	CAP 0.1uF 50 V	06121	B37987-T5104-M11
A5 C706	0160-5726	7	1	CAP 0.01uF 100 V	06121	B37987-J1103-M034
A5 C711	0160-5726	7	1	CAP 0.01uF 100 V	06121	B37987-J1103-M034
A5 C712	0160-6500	7	1	CAP 0.01uF 100 V	02010	SA101C103KAAH
A5 C713	0160-6500	7	1	CAP 0.01uF 100 V	02010	SA101C103KAAH
A5 C714	0160-6623	5	1	CAP 0.1uF 50 V	02010	SA115C104MAAH
A5 C715	0160-6623	5	1	CAP 0.1uF 50 V	02010	SA115C104MAAH
A5 C717	0160-6623	5	1	CAP 0.1uF 50 V	02010	SA115C104MAAH
A5 C718	0160-6623	5	1	CAP 0.1uF 50 V	02010	SA115C104MAAH
A5 C720	0160-6623	5	1	CAP 0.1uF 50 V	02010	SA115C104MAAH
A5 C721	0160-6500	7	1	CAP 0.01uF 100 V	02010	SA101C103KAAH
A5 C722	0160-6500	7	1	CAP 0.01uF 100 V	02010	SA101C103KAAH
A5 C724	0160-6623	5	1	CAP 0.1uF 50 V	02010	SA115C104MAAH
A5 C725	0160-5746	1	1	CAP 0.1uF 50 V	06121	B37987-T5104-M11
A5 C727	0160-6500	7	1	CAP 0.01uF 100 V	02010	SA101C103KAAH
A5 C728	0160-6500	7	1	CAP 0.01uF 100 V	02010	SA101C103KAAH
A5 C730	0160-6623	5	1	CAP 0.1uF 50 V	02010	SA115C104MAAH
A5 C731	0160-6623	5	1	CAP 0.1uF 50 V	02010	SA115C104MAAH
A5 C733	0160-6623	5	1	CAP 0.1uF 50 V	02010	SA115C104MAAH
A5 C735	0160-4535	4	1	CAP 1uF 50 V	02010	SR305C105KAAH
A5 C736	0160-6623	5	1	CAP 0.1uF 50 V	02010	SA115C104MAAH
A5 C740	0160-6623	5	1	CAP 0.1uF 50 V	02010	SA115C104MAAH
A5 C741	0160-5726	7	1	CAP 0.01uF 100 V	06121	B37987-J1103-M034
A5 C742	0160-6500	7	1	CAP 0.01uF 100 V	02010	SA101C103KAAH
A5 C743	0160-6500	7	1	CAP 0.01uF 100 V	02010	SA101C103KAAH
A5 C750	0160-6623	5	1	CAP 0.1uF 50 V	02010	SA115C104MAAH
A5 C760	0160-6623	5	1	CAP 0.1uF 50 V	02010	SA115C104MAAH

Table B-12. 8130A Option 020 Timing Board Parts List (continued)

Reference	HP Part #	CD	Qty	Description	Manuf'r	Part #
A5 C765	0160-6623	5	1	CAP 0.1uF 50 V	02010	SA115C104MAAH
A5 C770	0160-3872	0	1	CAP 2.2pF 200 V	06352	FD12C0G2D2R2C
A5 C771	0160-3872	0	1	CAP 2.2pF 200 V	06352	FD12C0G2D2R2C
A5 CP100	0180-1974	1	1	CAP 10uF 35 V	04200	150D106X9035R2-DYS
A5 CP102	0180-0229	7	1	CAP 33uF 10 V	04200	150D336X9010B2-DYS
A5 CP104	0180-0229	7	1	CAP 33uF 10 V	04200	150D336X9010B2-DYS
A5 CP106	0180-0229	7	1	CAP 33uF 10 V	04200	150D336X9010B2-DYS
A5 CP108	0180-1974	1	1	CAP 10uF 35 V	04200	150D106X9035R2-DYS
A5 CP180	0180-0229	7	1	CAP 33uF 10 V	04200	150D336X9010B2-DYS
A5 CP200	0180-4129	4	1	CAP 1uF 35 V	04200	173D105X9035V
A5 CP201	0180-4129	4	1	CAP 1uF 35 V	04200	173D105X9035V
A5 CR100	1901-0535	9	1	DIO- SCHOTTKY SM	02062	50825511
A5 CR102	1901-0535	9	1	DIO- SCHOTTKY SM	02062	50825511
A5 CR103	1901-0734	0	1	DIO-1N5818	02037	1N5818
A5 CR310	1901-1098	1	1	DIO-1N4150	00746	
A5 CR311	1901-1098	1	1	DIO-1N4150	00746	
A5 CR312	1901-1098	1	1	DIO-1N4150	00746	
A5 CR313	1901-1098	1	1	DIO-1N4150	00746	
A5 CR314	1901-1098	1	1	DIO-1N4150	00746	
A5 CR315	1901-1098	1	1	DIO-1N4150	00746	
A5 CR410	1901-1098	1	1	DIO-1N4150	00746	
A5 CR411	1901-1098	1	1	DIO-1N4150	00746	
A5 CR412	1901-1098	1	1	DIO-1N4150	00746	
A5 CR413	1901-1098	1	1	DIO-1N4150	00746	
A5 CR414	1901-1098	1	1	DIO-1N4150	00746	
A5 CR415	1901-1098	1	1	DIO-1N4150	00746	
A5 CR416	1901-0731	7	1	DIO-PWR RECT	02037	SR3010-3RL
A5 CR510	1901-1098	1	1	DIO-1N4150	00746	
A5 CR511	1901-1098	1	1	DIO-1N4150	00746	
A5 CR512	1901-1098	1	1	DIO-1N4150	00746	

Table B-12. 8130A Option 020 Timing Board Parts List (continued)

Reference	HP Part #	CD	Qty	Description	Manuf'r	Part #
A5 CR513	1901-1098	1	1	DIO-1N4150	00746	
A5 CR514	1901-1098	1	1	DIO-1N4150	00746	
A5 CR515	1901-1098	1	1	DIO-1N4150	00746	
A5 CR610	1901-1098	1	1	DIO-1N4150	00746	
A5 CR611	1901-1098	1	1	DIO-1N4150	00746	
A5 CR612	1901-1098	1	1	DIO-1N4150	00746	
A5 CR613	1901-1098	1	1	DIO-1N4150	00746	
A5 CR614	1901-1098	1	1	DIO-1N4150	00746	
A5 CR615	1901-1098	1	1	DIO-1N4150	00746	
A5 CR616	1901-0731	7	1	DIO-PWR RECT	02037	SR3010-3RL
A5 CR710	1901-1098	1	1	DIO-1N4150	00746	
A5 CR711	1901-1098	1	1	DIO-1N4150	00746	
A5 CR712	1901-1098	1	1	DIO-1N4150	00746	
A5 CR713	1901-1098	1	1	DIO-1N4150	00746	
A5 CR714	1901-1098	1	1	DIO-1N4150	00746	
A5 CR715	1901-1098	1	1	DIO-1N4150	00746	
A5 J100	1251-8324	1	1	CONN-POST-TP-HDR	04486	G06M96P4BEBL-004-715
A5 J101	1251-5380	3	1	CONN-POST-TP-HDR	02946	68000-602
A5 J102	1251-5380	3	1	CONN-POST-TP-HDR	02946	68000-602
A5 J200	1250-0543	8	1	CONN-RF SM-SNP	05769	51-053-0349-BE8
A5 J400	1251-5380	3	1	CONN-POST-TP-HDR	02946	68000-602
A5 J600	1251-5380	3	1	CONN-POST-TP-HDR	02946	68000-602
A5 K400	0490-1667	6	1	RLY 2C 12VDC	09809	RG2T-12V
A5 K600	0490-1667	6	1	RLY 2C 12VDC	09809	RG2T-12V
A5 L100	9100-1788	6	1	CORE-FERRITE	02995	VK200 20/4B
A5 L101	9100-1788	6	1	CORE-FERRITE	02995	VK200 20/4B
A5 L102	9100-1788	6	1	CORE-FERRITE	02995	VK200 20/4B
A5 L103	9100-1788	6	1	CORE-FERRITE	02995	VK200 20/4B
A5 L104	9100-1788	6	1	CORE-FERRITE	02995	VK200 20/4B
A5 L110	9100-2891	4	1	L 50NH +-10%	03273	10M050K-1

Table B-12. 8130A Option 020 Timing Board Parts List (continued)

Reference	HP Part #	CD	Qty	Description	Manuf'r	Part #
A5 L111	9100-2891	4	1	L 50NH +-10%	03273	10M050K-1
A5 L112	9100-2891	4	1	L 50NH +-10%	03273	10M050K-1
A5 L113	9100-2891	4	1	L 50NH +-10%	03273	10M050K-1
A5 L114	9100-2891	4	1	L 50NH +-10%	03273	10M050K-1
A5 L300	9100-2891	4	1	L 50NH +-10%	03273	10M050K-1
A5 L400	8159-0005	0	1	RES-ZERO OHMS	01339	L-2007-1
A5 L400	9100-2891	4		L 50NH +-10%	03273	10M050K-1
A5 L500	9100-2891	4	1	L 50NH +-10%	03273	10M050K-1
A5 L600	8159-0005	0	1	RES-ZERO OHMS	01339	L-2007-1
A5 L600	9100-2891	4		L 50NH +-10%	03273	10M050K-1
A5 L700	9100-2891	4	1	L 50NH +-10%	03273	10M050K-1
A5 MP130	1400-1437	0	4	CLAMP-CABLE	11808	
A5 MP134	1400-0082	9	1	CLMP-CA	02414	HP-2N
A5 MP136	3050-0891	7	1	WASHER-FL MTLC 3	06691	
A5 MP201	54100-29104	5	1	SPRING	28480	54100-29104
A5 MP202	54100-29101	2	1	CLAMP	28480	54100-29101
A5 MP209	54100-21103	8	1	SPRING	28480	54100-21103
A5 MP230	0380-1731	2	4	SPCR-PRS-IN	03981	YC3-4564
A5 MP240	0515-0659	8	4	SCR-MACHINE	05610	
A5 MP300	1200-1468	3	1	SOCKET RGA72 CN	10803	1KS072-33TT
A5 MP301	1200-1410	5	1	SOCKET PGA 72PI	10803	1KS072-33TG
A5 MP400	1200-1468	3	1	SOCKET RGA72 CN	10803	1KS072-33TT
A5 MP401	1200-1410	5	1	SOCKET PGI 72PI	10803	1KS072-33TG
A5 MP500	1200-1468	3	1	SOCKET RGA72 CN	10803	1KS072-33TT
A5 MP501	1200-1410	5	1	SOCKET PGI 72PI	10803	1KS072-33TG
A5 MP600	1200-1468	3	1	SOCKET RGA72 CN	10803	1KS072-33TT
A5 MP601	1200-1410	5	1	SOCKET PGI 72PI	10803	1KS072-33TG
A5 MP700	1200-1468	3	1	SOCKET RGA72 CN	10803	1KS072-33TT
A5 MP701	1200-1410	5	1	SOCKET PGI 72PI	10803	1KS072-33TG
A5 Q200	1853-0563	0	1	XSTR PNP SI	02037	2N3906(SEL)

Table B-12. 8130A Option 020 Timing Board Parts List (continued)

Reference	HP Part #	CD	Qty	Description	Manuf'r	Part #
A5 Q310	1854-1028	6	1	XSTR NPN SI	02037	2N3904
A5 Q312	1855-0309	6	1	MOSFET 2N4352 P-	02037	2N4352
A5 Q313	1855-0309	6	1	MOSFET 2N4352 P-	02037	2N4352
A5 Q314	1853-0569	6	1	XSTR PNP SI	02037	
A5 Q315	1854-0392	5	1	XSTR NPN SI	02037	2N5088
A5 Q316	1853-0569	6	1	XSTR PNP SI	02037	
A5 Q317	1854-0392	5	1	XSTR NPN SI	02037	2N5088
A5 Q318	1854-0392	5	1	XSTR NPN SI	02037	2N5088
A5 Q319	1853-0569	6	1	XSTR PNP SI	02037	
A5 Q410	1854-1028	6	1	XSTR NPN SI	02037	2N3904
A5 Q412	1855-0309	6	1	MOSFET 2N4352 P-	02037	2N4352
A5 Q413	1853-0569	6	1	XSTR PNP SI	02037	
A5 Q414	1853-0569	6	1	XSTR PNP SI	02037	
A5 Q415	1854-0392	5	1	XSTR NPN SI	02037	2N5088
A5 Q416	1853-0569	6	1	XSTR PNP SI	02037	
A5 Q417	1854-0392	5	1	XSTR NPN SI	02037	2N5088
A5 Q418	1854-0392	5	1	XSTR NPN SI	02037	2N5088
A5 Q419	1853-0569	6	1	XSTR PNP SI	02037	
A5 Q480	1854-0472	2	1	XSTR NPN SI DARL	02037	MPS-A14
A5 Q510	1854-1028	6	1	XSTR NPN SI	02037	2N3904
A5 Q512	1855-0309	6	1	MOSFET 2N4352 P-	02037	2N4352
A5 Q513	1853-0569	6	1	XSTR PNP SI	02037	
A5 Q514	1853-0569	6	1	XSTR PNP SI	02037	
A5 Q515	1854-0392	5	1	XSTR NPN SI	02037	2N5088
A5 Q516	1853-0569	6	1	XSTR PNP SI	02037	
A5 Q517	1854-0392	5	1	XSTR NPN SI	02037	2N5088
A5 Q518	1854-0392	5	1	XSTR NPN SI	02037	2N5088
A5 Q519	1853-0569	6	1	XSTR PNP SI	02037	
A5 Q610	1854-1028	6	1	XSTR NPN SI	02037	2N3904
A5 Q612	1855-0309	6	1	MOSFET 2N4352 P-	02037	2N4352

Table B-12. 8130A Option 020 Timing Board Parts List (continued)

Reference	HP Part #	CD	Qty	Description	Manuf'r	Part #
A5 Q613	1853-0569	6	1	XSTR PNP SI	02037	
A5 Q614	1853-0569	6	1	XSTR PNP SI	02037	
A5 Q615	1854-0392	5	1	XSTR NPN SI	02037	2N5088
A5 Q616	1853-0569	6	1	XSTR PNP SI	02037	
A5 Q617	1854-0392	5	1	XSTR NPN SI	02037	2N5088
A5 Q618	1854-0392	5	1	XSTR NPN SI	02037	2N5088
A5 Q619	1853-0569	6	1	XSTR PNP SI	02037	
A5 Q680	1854-0472	2	1	XSTR NPN SI DARL	02037	MPS-A14
A5 Q710	1854-1028	6	1	XSTR NPN SI	02037	2N3904
A5 Q712	1855-0309	6	1	MOSFET 2N4352 P-	02037	2N4352
A5 Q713	1853-0569	6	1	XSTR PNP SI	02037	
A5 Q714	1853-0569	6	1	XSTR PNP SI	02037	
A5 Q715	1854-0392	5	1	XSTR NPN SI	02037	2N5088
A5 Q716	1853-0569	6	1	XSTR PNP SI	02037	
A5 Q717	1854-0392	5	1	XSTR NPN SI	02037	2N5088
A5 Q718	1854-0392	5	1	XSTR NPN SI	02037	2N5088
A5 Q719	1853-0569	6	1	XSTR PNP SI	02037	
A5 R100	0757-0442	9	1	RES 10K 1% .125W	00746	CRB14 OR CRB25
A5 R200	0699-1206	1	1	RES 127 1% 2W MO	02499	GS-3
A5 R201	0699-1206	1	1	RES 127 1% 2W MO	02499	GS-3
A5 R202	0698-4855	0	1	RES 267 1% .5W T	01074	H2
A5 R204	0698-7205	0	1	RES 51.1 1% .05W	00746	CRB20
A5 R205	0757-0180	2	1	RES 31.6 1% .125	00746	CRB14 OR CRB25
A5 R206	0698-3162	0	1	RES 46.4K 1% .12	00746	CRB14 OR CRB25
A5 R208	0698-6347	9	1	RES 1.5K .1% .12	00746	CRB14 OR CRB25
A5 R209	0757-1094	9	1	RES 1.47K 1% .12	00746	CRB14 OR CRB25
A5 R210	0698-6963	5	1	RES 5.55K .1% .1	00746	CRB14 OR CRB25
A5 R211	0698-6963	5	1	RES 5.55K .1% .1	00746	CRB14 OR CRB25
A5 R212	0757-0394	0	1	RES 51.1 1% .125	00746	CRB14 OR CRB25
A5 R220	0757-0421	4	1	RES 825 1% .125W	00746	CRB14 OR CRB25

Table B-12. 8130A Option 020 Timing Board Parts List (continued)

Reference	HP Part #	CD	Qty	Description	Manuf'r	Part #
A5 R221	0698-3132	4	1	RES 261 1% .125W	00746	CRB14 OR CRB25
A5 R300	0757-0442	9	1	RES 10K 1% .125W	00746	CRB14 OR CRB25
A5 R301	0757-0394	0	1	RES 51.1 1% .125	00746	CRB14 OR CRB25
A5 R302	0698-4425	0	1	RES 1.54K 1% .12	00746	CRB14 OR CRB25
A5 R303	0757-0280	3	1	RES 1K 1% .125W	00746	CRB14 OR CRB25
A5 R304	0757-0280	3	1	RES 1K 1% .125W	00746	CRB14 OR CRB25
A5 R305	0757-0394	0	1	RES 51.1 1% .125	00746	CRB14 OR CRB25
A5 R306	0757-0394	0	1	RES 51.1 1% .125	00746	CRB14 OR CRB25
A5 R307	0698-3132	4	1	RES 261 1% .125W	00746	CRB14 OR CRB25
A5 R309	0757-0394	0	1	RES 51.1 1% .125	00746	CRB14 OR CRB25
A5 R310	0757-0279	0	1	RES 3.16K 1% .12	00746	CRB14 OR CRB25
A5 R311	0698-6360	6	1	RES 10K .1% .125	00746	CRB14 OR CRB25
A5 R312	0699-1100	4	1	RES 6.984K .1% .	01074	H8
A5 R313	0698-3153	9	1	RES 3.83K 1% .12	00746	CRB14 OR CRB25
A5 R314	0757-0449	6	1	RES 20K 1% .125W	00746	CRB14 OR CRB25
A5 R315	0757-0449	6	1	RES 20K 1% .125W	00746	CRB14 OR CRB25
A5 R319	0757-0280	3	1	RES 1K 1% .125W	00746	CRB14 OR CRB25
A5 R320	0757-0279	0	1	RES 3.16K 1% .12	00746	CRB14 OR CRB25
A5 R321	0757-0279	0	1	RES 3.16K 1% .12	00746	CRB14 OR CRB25
A5 R322	0757-0317	7	1	RES 1.33K 1% .12	00746	CRB14 OR CRB25
A5 R323	0698-3154	0	1	RES 4.22K 1% .12	00746	CRB14 OR CRB25
A5 R324	0698-0085	0	1	RES 2.61K 1% .12	00746	CRB14 OR CRB25
A5 R325	0698-0085	0	1	RES 2.61K 1% .12	00746	CRB14 OR CRB25
A5 R326	0757-0419	0	1	RES 681 1% .125W	00746	CRB14 OR CRB25
A5 R327	0757-0394	0	1	RES 51.1 1% .125	00746	CRB14 OR CRB25
A5 R328	0757-0394	0	1	RES 51.1 1% .125	00746	CRB14 OR CRB25
A5 R329	0757-0419	0	1	RES 681 1% .125W	00746	CRB14 OR CRB25
A5 R330	0698-6347	9	1	RES 1.5K .1% .12	00746	CRB14 OR CRB25
A5 R331	0698-6348	0	1	RES 3K .1% .125W	00746	CRB14 OR CRB25
A5 R333	0698-6347	9	1	RES 1.5K .1% .12	00746	CRB14 OR CRB25

Table B-12. 8130A Option 020 Timing Board Parts List (continued)

Reference	HP Part #	CD	Qty	Description	Manuf'r	Part #
A5 R334	0757-0279	0	1	RES 3.16K 1% .12	00746	CRB14 OR CRB25
A5 R335	0698-3438	3	1	RES 147 1% .125W	00746	CRB14 OR CRB25
A5 R336	0757-0394	0	1	RES 51.1 1% .125	00746	CRB14 OR CRB25
A5 R337	0757-0279	0	1	RES 3.16K 1% .12	00746	CRB14 OR CRB25
A5 R338	0757-0349	5	1	RES 22.6K 1% .12	00746	CRB14 OR CRB25
A5 R339	0757-0477	0	1	RES 332K 1% .125	00746	CRB14 OR CRB25
A5 R340	0757-0279	0	1	RES 3.16K 1% .12	00746	CRB14 OR CRB25
A5 R341	0698-3155	1	1	RES 4.64K 1% .12	00746	CRB14 OR CRB25
A5 R342	0698-3446	3	1	RES 383 1% .125W	00746	CRB14 OR CRB25
A5 R343	0698-3158	4	1	RES 23.7K 1% .12	00746	CRB14 OR CRB25
A5 R344	0698-3268	7	1	RES 11.5K 1% .12	00746	CRB14 OR CRB25
A5 R345	0698-3136	8	1	RES 17.8K 1% .12	00746	CRB14 OR CRB25
A5 R346	0698-0085	0	1	RES 2.61K 1% .12	00746	CRB14 OR CRB25
A5 R347	0757-0280	3	1	RES 1K 1% .125W	00746	CRB14 OR CRB25
A5 R348	0698-3438	3	1	RES 147 1% .125W	00746	CRB14 OR CRB25
A5 R350	0757-0442	9	1	RES 10K 1% .125W	00746	CRB14 OR CRB25
A5 R351	0698-3460	1	1	RES 422K 1% .125	00746	CRB14 OR CRB25
A5 R362	0757-0394	0	1	RES 51.1 1% .125	00746	CRB14 OR CRB25
A5 R367	8159-0005	0	1	RES-ZERO OHMS	01339	L-2007-1
A5 R370	0698-3161	9	1	RES 38.3K 1% .12	00746	CRB14 OR CRB25
A5 R371	0757-0280	3	1	RES 1K 1% .125W	00746	CRB14 OR CRB25
A5 R373	0698-3446	3	1	RES 383 1% .125W	00746	CRB14 OR CRB25
A5 R375	0698-3159	5	1	RES 26.1K 1% .12	00746	CRB14 OR CRB25
A5 R376	0757-0283	6	1	RES 2K 1% .125W	00746	CRB14 OR CRB25
A5 R377	0757-0283	6	1	RES 2K 1% .125W	00746	CRB14 OR CRB25
A5 R378	0757-0283	6	1	RES 2K 1% .125W	00746	CRB14 OR CRB25
A5 R379	0757-0283	6	1	RES 2K 1% .125W	00746	CRB14 OR CRB25
A5 R381	0757-0283	6	1	RES 2K 1% .125W	00746	CRB14 OR CRB25
A5 R390	0757-0283	6	1	RES 2K 1% .125W	00746	CRB14 OR CRB25
A5 R391	0757-0283	6	1	RES 2K 1% .125W	00746	CRB14 OR CRB25

Table B-12. 8130A Option 020 Timing Board Parts List (continued)

Reference	HP Part #	CD	Qty	Description	Manuf'r	Part #
A5 R392	0757-0283	6	1	RES 2K 1% .125W	00746	CRB14 OR CRB25
A5 R394	0757-0283	6	1	RES 2K 1% .125W	00746	CRB14 OR CRB25
A5 R396	0757-0283	6	1	RES 2K 1% .125W	00746	CRB14 OR CRB25
A5 R400	0757-0442	9	1	RES 10K 1% .125W	00746	CRB14 OR CRB25
A5 R401	0757-0394	0	1	RES 51.1 1% .125	00746	CRB14 OR CRB25
A5 R402	0698-4425	0	1	RES 1.54K 1% .12	00746	CRB14 OR CRB25
A5 R403	0698-4422	7	1	RES 1.27K 1% .12	00746	CRB14 OR CRB25
A5 R404	0757-0280	3	1	RES 1K 1% .125W	00746	CRB14 OR CRB25
A5 R405	0757-0394	0	1	RES 51.1 1% .125	00746	CRB14 OR CRB25
A5 R406	0698-3438	3	1	RES 147 1% .125W	00746	CRB14 OR CRB25
A5 R409	0757-0394	0	1	RES 51.1 1% .125	00746	CRB14 OR CRB25
A5 R410	0757-0279	0	1	RES 3.16K 1% .12	00746	CRB14 OR CRB25
A5 R411	0698-6360	6	1	RES 10K .1% .125	00746	CRB14 OR CRB25
A5 R412	0699-1011	6	1	RES 3.32K .1% .1	00746	CRB14 OR CRB25
A5 R413	0698-3153	9	1	RES 3.83K 1% .12	00746	CRB14 OR CRB25
A5 R414	0757-0449	6	1	RES 20K 1% .125W	00746	CRB14 OR CRB25
A5 R415	0757-0449	6	1	RES 20K 1% .125W	00746	CRB14 OR CRB25
A5 R419	0757-0280	3	1	RES 1K 1% .125W	00746	CRB14 OR CRB25
A5 R420	0757-0279	0	1	RES 3.16K 1% .12	00746	CRB14 OR CRB25
A5 R421	0757-0279	0	1	RES 3.16K 1% .12	00746	CRB14 OR CRB25
A5 R422	0757-0424	7	1	RES 1.1K 1% .125	00746	CRB14 OR CRB25
A5 R423	0757-0279	0	1	RES 3.16K 1% .12	00746	CRB14 OR CRB25
A5 R424	0698-0085	0	1	RES 2.61K 1% .12	00746	CRB14 OR CRB25
A5 R425	0757-0278	9	1	RES 1.78K 1% .12	00746	CRB14 OR CRB25
A5 R426	0757-0280	3	1	RES 1K 1% .125W	00746	CRB14 OR CRB25
A5 R427	0757-0394	0	1	RES 51.1 1% .125	00746	CRB14 OR CRB25
A5 R428	0757-0394	0	1	RES 51.1 1% .125	00746	CRB14 OR CRB25
A5 R429	0757-0419	0	1	RES 681 1% .125W	00746	CRB14 OR CRB25
A5 R430	0698-6347	9	1	RES 1.5K .1% .12	00746	CRB14 OR CRB25
A5 R431	0698-6348	0	1	RES 3K .1% .125W	00746	CRB14 OR CRB25

Table B-12. 8130A Option 020 Timing Board Parts List (continued)

Reference	HP Part #	CD	Qty	Description	Manuf'r	Part #
A5 R433	0698-6347	9	1	RES 1.5K .1% .12	00746	CRB14 OR CRB25
A5 R434	0698-6616	5	1	RES 750 .1% .125	00746	CRB14 OR CRB25
A5 R435	0698-3438	3	1	RES 147 1% .125W	00746	CRB14 OR CRB25
A5 R436	0757-0394	0	1	RES 51.1 1% .125	00746	CRB14 OR CRB25
A5 R437	0698-6616	5	1	RES 750 .1% .125	00746	CRB14 OR CRB25
A5 R438 10	0757-0465	6		RES 100K 1% .125	00746	CRB14 OR CRB25
A5 R438*	0757-0463	4	1	RES 82.5K 1% .12	00746	CRB14 OR CRB25
A5 R440	0757-0279	0	1	RES 3.16K 1% .12	00746	CRB14 OR CRB25
A5 R441	0698-3155	1	1	RES 4.64K 1% .12	00746	CRB14 OR CRB25
A5 R442	0698-3446	3	1	RES 383 1% .125W	00746	CRB14 OR CRB25
A5 R443	0757-0462	3	1	RES 75K 1% .125W	00746	CRB14 OR CRB25
A5 R444	0698-3268	7	1	RES 11.5K 1% .12	00746	CRB14 OR CRB25
A5 R445	0698-3136	8	1	RES 17.8K 1% .12	00746	CRB14 OR CRB25
A5 R446	0698-0085	0	1	RES 2.61K 1% .12	00746	CRB14 OR CRB25
A5 R447	0757-0280	3	1	RES 1K 1% .125W	00746	CRB14 OR CRB25
A5 R448	0698-3438	3	1	RES 147 1% .125W	00746	CRB14 OR CRB25
A5 R450	0757-0442	9	1	RES 10K 1% .125W	00746	CRB14 OR CRB25
A5 R453	0757-0462	3		RES 75K 1% .125W	00746	CRB14 OR CRB25
A5 R453*	0698-3243	8	1	RES 178K 1% .125	00746	CRB14 OR CRB25
A5 R460	0757-0394	0	1	RES 51.1 1% .125	00746	CRB14 OR CRB25
A5 R461	0757-0394	0	1	RES 51.1 1% .125	00746	CRB14 OR CRB25
A5 R462	0757-0394	0	1	RES 51.1 1% .125	00746	CRB14 OR CRB25
A5 R467	8159-0005	0	1	RES-ZERO OHMS	01339	L-2007-1
A5 R470	0698-3158	4	1	RES 23.7K 1% .12	00746	CRB14 OR CRB25
A5 R471	0757-0280	3	1	RES 1K 1% .125W	00746	CRB14 OR CRB25
A5 R473	0698-3446	3	1	RES 383 1% .125W	00746	CRB14 OR CRB25
A5 R475	0698-3159	5	1	RES 26.1K 1% .12	00746	CRB14 OR CRB25
A5 R476	0757-0283	6	1	RES 2K 1% .125W	00746	CRB14 OR CRB25
A5 R477	0757-0283	6	1	RES 2K 1% .125W	00746	CRB14 OR CRB25
A5 R479	0757-0283	6	1	RES 2K 1% .125W	00746	CRB14 OR CRB25

Table B-12. 8130A Option 020 Timing Board Parts List (continued)

Reference	HP Part #	CD	Qty	Description	Manuf'r	Part #
A5 R480	0757-0283	6	1	RES 2K 1% .125W	00746	CRB14 OR CRB25
A5 R481	0757-0283	6	1	RES 2K 1% .125W	00746	CRB14 OR CRB25
A5 R486	0757-0465	6	1	RES 100K 1% .125	00746	CRB14 OR CRB25
A5 R490	0757-0283	6	1	RES 2K 1% .125W	00746	CRB14 OR CRB25
A5 R491	0757-0283	6	1	RES 2K 1% .125W	00746	CRB14 OR CRB25
A5 R492	0757-0283	6	1	RES 2K 1% .125W	00746	CRB14 OR CRB25
A5 R494	0757-0283	6	1	RES 2K 1% .125W	00746	CRB14 OR CRB25
A5 R496	0757-0283	6	1	RES 2K 1% .125W	00746	CRB14 OR CRB25
A5 R501	0757-0394	0	1	RES 51.1 1% .125	00746	CRB14 OR CRB25
A5 R502	0698-4425	0	1	RES 1.54K 1% .12	00746	CRB14 OR CRB25
A5 R503	0757-0422	5	1	RES 909 1% .125W	00746	CRB14 OR CRB25
A5 R504	0757-0280	3	1	RES 1K 1% .125W	00746	CRB14 OR CRB25
A5 R505	0757-0394	0	1	RES 51.1 1% .125	00746	CRB14 OR CRB25
A5 R506	0698-3438	3	1	RES 147 1% .125W	00746	CRB14 OR CRB25
A5 R509	0757-0394	0	1	RES 51.1 1% .125	00746	CRB14 OR CRB25
A5 R510	0757-0279	0	1	RES 3.16K 1% .12	00746	CRB14 OR CRB25
A5 R511	0698-6360	6	1	RES 10K .1% .125	00746	CRB14 OR CRB25
A5 R512	0699-1011	6	1	RES 3.32K .1% .1	00746	CRB14 OR CRB25
A5 R513	0698-3153	9	1	RES 3.83K 1% .12	00746	CRB14 OR CRB25
A5 R514	0757-0449	6	1	RES 20K 1% .125W	00746	CRB14 OR CRB25
A5 R515	0757-0449	6	1	RES 20K 1% .125W	00746	CRB14 OR CRB25
A5 R519	0757-0280	3	1	RES 1K 1% .125W	00746	CRB14 OR CRB25
A5 R520	0757-0279	0	1	RES 3.16K 1% .12	00746	CRB14 OR CRB25
A5 R521	0757-0279	0	1	RES 3.16K 1% .12	00746	CRB14 OR CRB25
A5 R522	0757-0317	7	1	RES 1.33K 1% .12	00746	CRB14 OR CRB25
A5 R523	0698-0084	9	1	RES 2.15K 1% .12	00746	CRB14 OR CRB25
A5 R524	0698-0085	0	1	RES 2.61K 1% .12	00746	CRB14 OR CRB25
A5 R525	0757-0278	9	1	RES 1.78K 1% .12	00746	CRB14 OR CRB25
A5 R526	0757-0280	3	1	RES 1K 1% .125W	00746	CRB14 OR CRB25
A5 R527	0757-0394	0	1	RES 51.1 1% .125	00746	CRB14 OR CRB25

Table B-12. 8130A Option 020 Timing Board Parts List (continued)

Reference	HP Part #	CD	Qty	Description	Manuf'r	Part #
A5 R528	0757-0394	0	1	RES 51.1 1% .125	00746	CRB14 OR CRB25
A5 R529	0757-0419	0	1	RES 681 1% .125W	00746	CRB14 OR CRB25
A5 R530	0698-6347	9	1	RES 1.5K .1% .12	00746	CRB14 OR CRB25
A5 R531	0698-6348	0	1	RES 3K .1% .125W	00746	CRB14 OR CRB25
A5 R533	0698-6347	9	1	RES 1.5K .1% .12	00746	CRB14 OR CRB25
A5 R534	0698-6616	5	1	RES 750 .1% .125	00746	CRB14 OR CRB25
A5 R535	0698-3438	3	1	RES 147 1% .125W	00746	CRB14 OR CRB25
A5 R536	0757-0394	0	1	RES 51.1 1% .125	00746	CRB14 OR CRB25
A5 R537	0698-6616	5	1	RES 750 .1% .125	00746	CRB14 OR CRB25
A5 R538	0757-0978	6	1	RES 95.3K 1% .12	00746	CRB14 OR CRB25
A5 R539	0698-3260	9	1	RES 464K 1% .125	00746	CRB14 OR CRB25
A5 R540	0757-0279	0	1	RES 3.16K 1% .12	00746	CRB14 OR CRB25
A5 R541	0698-3155	1	1	RES 4.64K 1% .12	00746	CRB14 OR CRB25
A5 R542	0698-3446	3	1	RES 383 1% .125W	00746	CRB14 OR CRB25
A5 R543	0757-0464	5	1	RES 90.9K 1% .12	00746	CRB14 OR CRB25
A5 R544	0698-3268	7	1	RES 11.5K 1% .12	00746	CRB14 OR CRB25
A5 R545	0698-3136	8	1	RES 17.8K 1% .12	00746	CRB14 OR CRB25
A5 R546	0698-0085	0	1	RES 2.61K 1% .12	00746	CRB14 OR CRB25
A5 R547	0757-0280	3	1	RES 1K 1% .125W	00746	CRB14 OR CRB25
A5 R548	0698-3438	3	1	RES 147 1% .125W	00746	CRB14 OR CRB25
A5 R550	0757-0442	9	1	RES 10K 1% .125W	00746	CRB14 OR CRB25
A5 R551	0698-8961	7	1	RES 909K 1% .125	00746	CRB14 OR CRB25
A5 R560	0757-0394	0	1	RES 51.1 1% .125	00746	CRB14 OR CRB25
A5 R567	8159-0005	0	1	RES-ZERO OHMS	01339	L-2007-1
A5 R570	0757-0449	6	1	RES 20K 1% .125W	00746	CRB14 OR CRB25
A5 R571	0757-0280	3	1	RES 1K 1% .125W	00746	CRB14 OR CRB25
A5 R573	0698-3446	3	1	RES 383 1% .125W	00746	CRB14 OR CRB25
A5 R575	0698-3159	5	1	RES 26.1K 1% .12	00746	CRB14 OR CRB25
A5 R576	0757-0283	6	1	RES 2K 1% .125W	00746	CRB14 OR CRB25
A5 R577	0757-0283	6	1	RES 2K 1% .125W	00746	CRB14 OR CRB25

Table B-12. 8130A Option 020 Timing Board Parts List (continued)

Reference	HP Part #	CD	Qty	Description	Manuf'r	Part #
A5 R579	0757-0283	6	1	RES 2K 1% .125W	00746	CRB14 OR CRB25
A5 R580	0757-0283	6	1	RES 2K 1% .125W	00746	CRB14 OR CRB25
A5 R581	0757-0283	6	1	RES 2K 1% .125W	00746	CRB14 OR CRB25
A5 R590	0757-0283	6	1	RES 2K 1% .125W	00746	CRB14 OR CRB25
A5 R591	0757-0283	6	1	RES 2K 1% .125W	00746	CRB14 OR CRB25
A5 R592	0757-0283	6	1	RES 2K 1% .125W	00746	CRB14 OR CRB25
A5 R594	0757-0283	6	1	RES 2K 1% .125W	00746	CRB14 OR CRB25
A5 R596	0757-0283	6	1	RES 2K 1% .125W	00746	CRB14 OR CRB25
A5 R600	0757-0442	9	1	RES 10K 1% .125W	00746	CRB14 OR CRB25
A5 R601	0757-0394	0	1	RES 51.1 1% .125	00746	CRB14 OR CRB25
A5 R602	0698-4425	0	1	RES 1.54K 1% .12	00746	CRB14 OR CRB25
A5 R603	0698-4422	7	1	RES 1.27K 1% .12	00746	CRB14 OR CRB25
A5 R604	0757-0280	3	1	RES 1K 1% .125W	00746	CRB14 OR CRB25
A5 R605	0757-0394	0	1	RES 51.1 1% .125	00746	CRB14 OR CRB25
A5 R606	0698-3438	3	1	RES 147 1% .125W	00746	CRB14 OR CRB25
A5 R609	0757-0394	0	1	RES 51.1 1% .125	00746	CRB14 OR CRB25
A5 R610	0757-0279	0	1	RES 3.16K 1% .12	00746	CRB14 OR CRB25
A5 R611	0698-6360	6	1	RES 10K .1% .125	00746	CRB14 OR CRB25
A5 R612	0699-1011	6	1	RES 3.32K .1% .1	00746	CRB14 OR CRB25
A5 R613	0698-3153	9	1	RES 3.83K 1% .12	00746	CRB14 OR CRB25
A5 R614	0757-0449	6	1	RES 20K 1% .125W	00746	CRB14 OR CRB25
A5 R615	0757-0449	6	1	RES 20K 1% .125W	00746	CRB14 OR CRB25
A5 R619	0757-0280	3	1	RES 1K 1% .125W	00746	CRB14 OR CRB25
A5 R620	0757-0279	0	1	RES 3.16K 1% .12	00746	CRB14 OR CRB25
A5 R621	0757-0279	0	1	RES 3.16K 1% .12	00746	CRB14 OR CRB25
A5 R622	0757-0424	7	1	RES 1.1K 1% .125	00746	CRB14 OR CRB25
A5 R623	0757-0279	0	1	RES 3.16K 1% .12	00746	CRB14 OR CRB25
A5 R624	0698-0085	0	1	RES 2.61K 1% .12	00746	CRB14 OR CRB25
A5 R625	0757-0278	9	1	RES 1.78K 1% .12	00746	CRB14 OR CRB25
A5 R626	0757-0280	3	1	RES 1K 1% .125W	00746	CRB14 OR CRB25

Table B-12. 8130A Option 020 Timing Board Parts List (continued)

Reference	HP Part #	CD	Qty	Description	Manuf'r	Part #
A5 R627	0757-0394	0	1	RES 51.1 1% .125	00746	CRB14 OR CRB25
A5 R628	0757-0394	0	1	RES 51.1 1% .125	00746	CRB14 OR CRB25
A5 R629	0757-0419	0	1	RES 681 1% .125W	00746	CRB14 OR CRB25
A5 R630	0698-6347	9	1	RES 1.5K .1% .12	00746	CRB14 OR CRB25
A5 R631	0698-6348	0	1	RES 3K .1% .125W	00746	CRB14 OR CRB25
A5 R633	0698-6347	9	1	RES 1.5K .1% .12	00746	CRB14 OR CRB25
A5 R634	0698-6616	5	1	RES 750 .1% .125	00746	CRB14 OR CRB25
A5 R635	0698-3438	3	1	RES 147 1% .125W	00746	CRB14 OR CRB25
A5 R636	0757-0394	0	1	RES 51.1 1% .125	00746	CRB14 OR CRB25
A5 R637	0698-6616	5	1	RES 750 .1% .125	00746	CRB14 OR CRB25
A5 R638	0757-0465	6		RES 100K 1% .125	00746	CRB14 OR CRB25
A5 R638*	0757-0463	4	1	RES 82.5K 1% .12	00746	CRB14 OR CRB25
A5 R640	0757-0279	0	1	RES 3.16K 1% .12	00746	CRB14 OR CRB25
A5 R641	0698-3155	1	1	RES 4.64K 1% .12	00746	CRB14 OR CRB25
A5 R642	0698-3446	3	1	RES 383 1% .125W	00746	CRB14 OR CRB25
A5 R643	0757-0462	3	1	RES 75K 1% .125W	00746	CRB14 OR CRB25
A5 R644	0698-3268	7	1	RES 11.5K 1% .12	00746	CRB14 OR CRB25
A5 R645	0698-3136	8	1	RES 17.8K 1% .12	00746	CRB14 OR CRB25
A5 R646	0698-0085	0	1	RES 2.61K 1% .12	00746	CRB14 OR CRB25
A5 R647	0757-0280	3	1	RES 1K 1% .125W	00746	CRB14 OR CRB25
A5 R648	0698-3438	3	1	RES 147 1% .125W	00746	CRB14 OR CRB25
A5 R650	0757-0442	9	1	RES 10K 1% .125W	00746	CRB14 OR CRB25
A5 R653	0757-0462	3		RES 75K 1% .125W	00746	CRB14 OR CRB25
A5 R653*	0698-3243	8	1	RES 178K 1% .125	00746	CRB14 OR CRB25
A5 R660	0757-0394	0	1	RES 51.1 1% .125	00746	CRB14 OR CRB25
A5 R661	0757-0394	0	1	RES 51.1 1% .125	00746	CRB14 OR CRB25
A5 R667	8159-0005	0	1	RES-ZERO OHMS	01339	L-2007-1
A5 R670	0698-3158	4	1	RES 23.7K 1% .12	00746	CRB14 OR CRB25
A5 R671	0757-0280	3	1	RES 1K 1% .125W	00746	CRB14 OR CRB25
A5 R673	0698-3446	3	1	RES 383 1% .125W	00746	CRB14 OR CRB25

Table B-12. 8130A Option 020 Timing Board Parts List (continued)

Reference	HP Part #	CD	Qty	Description	Manuf'r	Part #
A5 R675	0698-3159	5	1	RES 26.1K 1% .12	00746	CRB14 OR CRB25
A5 R676	0757-0283	6	1	RES 2K 1% .125W	00746	CRB14 OR CRB25
A5 R677	0757-0283	6	1	RES 2K 1% .125W	00746	CRB14 OR CRB25
A5 R679	0757-0283	6	1	RES 2K 1% .125W	00746	CRB14 OR CRB25
A5 R680	0757-0283	6	1	RES 2K 1% .125W	00746	CRB14 OR CRB25
A5 R681	0757-0283	6	1	RES 2K 1% .125W	00746	CRB14 OR CRB25
A5 R686	0757-0465	6	1	RES 100K 1% .125	00746	CRB14 OR CRB25
A5 R690	0757-0283	6	1	RES 2K 1% .125W	00746	CRB14 OR CRB25
A5 R691	0757-0283	6	1	RES 2K 1% .125W	00746	CRB14 OR CRB25
A5 R692	0757-0283	6	1	RES 2K 1% .125W	00746	CRB14 OR CRB25
A5 R694	0757-0283	6	1	RES 2K 1% .125W	00746	CRB14 OR CRB25
A5 R696	0757-0283	6	1	RES 2K 1% .125W	00746	CRB14 OR CRB25
A5 R701	0757-0394	0	1	RES 51.1 1% .125	00746	CRB14 OR CRB25
A5 R702	0698-4425	0	1	RES 1.54K 1% .12	00746	CRB14 OR CRB25
A5 R703	0757-0422	5	1	RES 909 1% .125W	00746	CRB14 OR CRB25
A5 R704	0757-0280	3	1	RES 1K 1% .125W	00746	CRB14 OR CRB25
A5 R705	0757-0394	0	1	RES 51.1 1% .125	00746	CRB14 OR CRB25
A5 R706	0698-3438	3	1	RES 147 1% .125W	00746	CRB14 OR CRB25
A5 R709	0757-0394	0	1	RES 51.1 1% .125	00746	CRB14 OR CRB25
A5 R710	0757-0279	0	1	RES 3.16K 1% .12	00746	CRB14 OR CRB25
A5 R711	0698-6360	6	1	RES 10K .1% .125	00746	CRB14 OR CRB25
A5 R712	0699-1011	6	1	RES 3.32K .1% .1	00746	CRB14 OR CRB25
A5 R713	0698-3153	9	1	RES 3.83K 1% .12	00746	CRB14 OR CRB25
A5 R714	0757-0449	6	1	RES 20K 1% .125W	00746	CRB14 OR CRB25
A5 R715	0757-0449	6	1	RES 20K 1% .125W	00746	CRB14 OR CRB25
A5 R719	0757-0280	3	1	RES 1K 1% .125W	00746	CRB14 OR CRB25
A5 R720	0757-0279	0	1	RES 3.16K 1% .12	00746	CRB14 OR CRB25
A5 R721	0757-0279	0	1	RES 3.16K 1% .12	00746	CRB14 OR CRB25
A5 R722	0757-0317	7	1	RES 1.33K 1% .12	00746	CRB14 OR CRB25
A5 R723	0698-0084	9	1	RES 2.15K 1% .12	00746	CRB14 OR CRB25

Table B-12. 8130A Option 020 Timing Board Parts List (continued)

Reference	HP Part #	CD	Qty	Description	Manuf'r	Part #
A5 R724	0698-0085	0	1	RES 2.61K 1% .12	00746	CRB14 OR CRB25
A5 R725	0757-0278	9	1	RES 1.78K 1% .12	00746	CRB14 OR CRB25
A5 R726	0757-0280	3	1	RES 1K 1% .125W	00746	CRB14 OR CRB25
A5 R727	0757-0394	0	1	RES 51.1 1% .125	00746	CRB14 OR CRB25
A5 R728	0757-0394	0	1	RES 51.1 1% .125	00746	CRB14 OR CRB25
A5 R729	0757-0419	0	1	RES 681 1% .125W	00746	CRB14 OR CRB25
A5 R730	0698-6347	9	1	RES 1.5K .1% .12	00746	CRB14 OR CRB25
A5 R731	0698-6348	0	1	RES 3K .1% .125W	00746	CRB14 OR CRB25
A5 R733	0698-6347	9	1	RES 1.5K .1% .12	00746	CRB14 OR CRB25
A5 R734	0698-6616	5	1	RES 750 .1% .125	00746	CRB14 OR CRB25
A5 R735	0698-3438	3	1	RES 147 1% .125W	00746	CRB14 OR CRB25
A5 R736	0757-0394	0	1	RES 51.1 1% .125	00746	CRB14 OR CRB25
A5 R737	0698-6616	5	1	RES 750 .1% .125	00746	CRB14 OR CRB25
A5 R738	0757-0978	6	1	RES 95.3K 1% .12	00746	CRB14 OR CRB25
A5 R739	0698-3260	9	1	RES 464K 1% .125	00746	CRB14 OR CRB25
A5 R740	0757-0279	0	1	RES 3.16K 1% .12	00746	CRB14 OR CRB25
A5 R741	0698-3155	1	1	RES 4.64K 1% .12	00746	CRB14 OR CRB25
A5 R742	0698-3446	3	1	RES 383 1% .125W	00746	CRB14 OR CRB25
A5 R743	0757-0464	5	1	RES 90.9K 1% .12	00746	CRB14 OR CRB25
A5 R744	0698-3268	7	1	RES 11.5K 1% .12	00746	CRB14 OR CRB25
A5 R745	0698-3136	8	1	RES 17.8K 1% .12	00746	CRB14 OR CRB25
A5 R746	0698-0085	0	1	RES 2.61K 1% .12	00746	CRB14 OR CRB25
A5 R747	0757-0280	3	1	RES 1K 1% .125W	00746	CRB14 OR CRB25
A5 R748	0698-3438	3	1	RES 147 1% .125W	00746	CRB14 OR CRB25
A5 R750	0757-0442	9	1	RES 10K 1% .125W	00746	CRB14 OR CRB25
A5 R751	0698-8961	7	1	RES 909K 1% .125	00746	CRB14 OR CRB25
A5 R760	0757-0394	0	1	RES 51.1 1% .125	00746	CRB14 OR CRB25
A5 R767	8159-0005	0	1	RES-ZERO OHMS	01339	L-2007-1
A5 R770	0757-0449	6	1	RES 20K 1% .125W	00746	CRB14 OR CRB25
A5 R771	0757-0280	3	1	RES 1K 1% .125W	00746	CRB14 OR CRB25

Table B-12. 8130A Option 020 Timing Board Parts List (continued)

Reference	HP Part #	CD	Qty	Description	Manuf'r	Part #
A5 R773	0698-3446	3	1	RES 383 1% .125W	00746	CRB14 OR CRB25
A5 R775	0698-3159	5	1	RES 26.1K 1% .12	00746	CRB14 OR CRB25
A5 R776	0757-0283	6	1	RES 2K 1% .125W	00746	CRB14 OR CRB25
A5 R777	0757-0283	6	1	RES 2K 1% .125W	00746	CRB14 OR CRB25
A5 R779	0757-0283	6	1	RES 2K 1% .125W	00746	CRB14 OR CRB25
A5 R780	0757-0283	6	1	RES 2K 1% .125W	00746	CRB14 OR CRB25
A5 R781	0757-0283	6	1	RES 2K 1% .125W	00746	CRB14 OR CRB25
A5 R790	0757-0283	6	1	RES 2K 1% .125W	00746	CRB14 OR CRB25
A5 R791	0757-0283	6	1	RES 2K 1% .125W	00746	CRB14 OR CRB25
A5 R792	0757-0283	6	1	RES 2K 1% .125W	00746	CRB14 OR CRB25
A5 R794	0757-0283	6	1	RES 2K 1% .125W	00746	CRB14 OR CRB25
A5 R796	0757-0283	6	1	RES 2K 1% .125W	00746	CRB14 OR CRB25
A5 RA100	1810-0316	1	1	NETWORK-RES DIP	02483	761-3-R10K
A5 RT393	0837-0035	6	1	THERMISTOR DISC	05098	35D24
A5 RT493	0837-0035	6	1	THERMISTOR DISC	05098	35D24
A5 RT593	0837-0035	6	1	THERMISTOR DISC	05098	35D24
A5 RT693	0837-0035	6	1	THERMISTOR DISC	05098	35D24
A5 RT793	0837-0035	6	1	THERMISTOR DISC	05098	35D24
A5 TP200	0360-2264	6	1	TERM.-TEST POINT	10358	1095D
A5 TP311	0360-2264	6	1	TERM.-TEST POINT	10358	1095D
A5 TP312	0360-2264	6	1	TERM.-TEST POINT	10358	1095D
A5 TP323	0360-2264	6	1	TERM.-TEST POINT	10358	1095D
A5 TP324	0360-2264	6	1	TERM.-TEST POINT	10358	1095D
A5 TP411	0360-2264	6	1	TERM.-TEST POINT	10358	1095D
A5 TP423	0360-2264	6	1	TERM.-TEST POINT	10358	1095D
A5 TP424	0360-2264	6	1	TERM.-TEST POINT	10358	1095D
A5 TP511	0360-2264	6	1	TERM.-TEST POINT	10358	1095D
A5 TP512	0360-2264	6	1	TERM.-TEST POINT	10358	1095D
A5 TP523	0360-2264	6	1	TERM.-TEST POINT	10358	1095D
A5 TP524	0360-2264	6	1	TERM.-TEST POINT	10358	1095D

Table B-12. 8130A Option 020 Timing Board Parts List (continued)

Reference	HP Part #	CD	Qty	Description	Manuf'r	Part #
A5 TP611	0360-2264	6	1	TERM.-TEST POINT	10358	1095D
A5 TP623	0360-2264	6	1	TERM.-TEST POINT	10358	1095D
A5 TP624	0360-2264	6	1	TERM.-TEST POINT	10358	1095D
A5 TP711	0360-2264	6	1	TERM.-TEST POINT	10358	1095D
A5 TP723	0360-2264	6	1	TERM.-TEST POINT	10358	1095D
A5 TP724	0360-2264	6	1	TERM.-TEST POINT	10358	1095D
A5 U100	1820-3665	0	1	IC-MM74HCT245N	01698	SN74HCT245N
A5 U101	1820-3847	0	1	IC-MM74HCT138N	01698	SN74HCT138N
A5 U102	1820-3082	5	1	IC-MC74HC374N	01698	SN74HC374N
A5 U103	1820-3082	5	1	IC-MC74HC374N	01698	SN74HC374N
A5 U104	1820-3847	0	1	IC-MM74HCT138N	01698	SN74HCT138N
A5 U105	1820-3082	5	1	IC-MC74HC374N	01698	SN74HC374N
A5 U106	1820-3082	5	1	IC-MC74HC374N	01698	SN74HC374N
A5 U107	1820-3847	0	1	IC-MM74HCT138N	01698	SN74HCT138N
A5 U108	1820-3082	5	1	IC-MC74HC374N	01698	SN74HC374N
A5 U109	1820-3847	0	1	IC-MM74HCT138N	01698	SN74HCT138N
A5 U110	1820-3082	5	1	IC-MC74HC374N	01698	SN74HC374N
A5 U111	1820-3082	5	1	IC-MC74HC374N	01698	SN74HC374N
A5 U112	1818-3164	9	1	IC X2816BP	10572	X2816BP
A5 U200	1NB7-8008	1	1	SYNC COMP HYBRID	28480	1NB7-8008
A5 U201	1826-0544	0	1	IC-V RGLTR	02037	
A5 U202	1820-3082	5	1	IC-MC74HC374N	01698	SN74HC374N
A5 U203	1826-0550	8	1	D/A 8-BIT	02910	DAC08EN
A5 U204	1820-0493	6	1	IC 307	03406	LM307N
A5 U300	1DP9-0002	0	1	IC T1671	28480	1DP9-0002
A5 U301	1DP6-0001	3	1	IC COUNTER 200M	28480	1DP6-0001
A5 U303	1820-4995	1	1	IC-TC74HC592P	06354	TC74HC592P
A5 U304	1820-4995	1	1	IC-TC74HC592P	06354	TC74HC592P
A5 U305	1820-5067	0	1	IC-74AC74PC	03406	74AC74PC
A5 U306	1820-5067	0	1	IC-74AC74PC	03406	74AC74PC

Table B-12. 8130A Option 020 Timing Board Parts List (continued)

Reference	HP Part #	CD	Qty	Description	Manuf'r	Part #
A5 U307	1820-3298	5	1	IC-MM74HC32N	02037	MC74HC32N
A5 U310	1826-1553	3	1	IC 1014	10858	LT1014DN
A5 U311	1826-0774	8	1	IC LM385BZ-1.2	03406	LM385BZ-1.2
A5 U312	1826-1341	7	1	D/A 12-DGT	03406	DAC1232LCD
A5 U313	1826-1409	8	1	IC 1013	10858	LT1013CN8
A5 U314	1826-0315	3	1	IC 348	03406	LM348N
A5 U318	1826-0916	0	1	ANLG SW AD7511DI	03285	AD7511DIKN
A5 U400	1DP9-0001	9	1	IC TIMG GEN 500	28480	1DP9-0001
A5 U401	1DP6-0001	3	1	IC COUNTER 200M	28480	1DP6-0001
A5 U410	1826-1553	3	1	IC 1014	10858	LT1014DN
A5 U411	1826-0774	8	1	IC LM385BZ-1.2	03406	LM385BZ-1.2
A5 U412	1826-1341	7	1	D/A 12-DGT	03406	DAC1232LCD
A5 U413	1826-1409	8	1	IC 1013	10858	LT1013CN8
A5 U414	1826-0315	3	1	IC 348	03406	LM348N
A5 U418	1826-0916	0	1	ANLG SW AD7511DI	03285	AD7511DIKN
A5 U500	1DP9-0001	9	1	IC TIMG GEN 500	28480	1DP9-0001
A5 U501	1DP6-0001	3	1	IC COUNTER 200M	28480	1DP6-0001
A5 U510	1826-1553	3	1	IC 1014	10858	LT1014DN
A5 U511	1826-0774	8	1	IC LM385BZ-1.2	03406	LM385BZ-1.2
A5 U512	1826-1341	7	1	D/A 12-DGT	03406	DAC1232LCD
A5 U513	1826-1409	8	1	IC 1013	10858	LT1013CN8
A5 U514	1826-0315	3	1	IC 348	03406	LM348N
A5 U518	1826-0916	0	1	ANLG SW AD7511DI	03285	AD7511DIKN
A5 U600	1DP9-0001	9	1	IC TIMG GEN 500	28480	1DP9-0001
A5 U601	1DP6-0001	3	1	IC COUNTER 200M	28480	1DP6-0001
A5 U610	1826-1553	3	1	IC 1014	10858	LT1014DN
A5 U611	1826-0774	8	1	IC LM385BZ-1.2	03406	LM385BZ-1.2
A5 U612	1826-1341	7	1	D/A 12-DGT	03406	DAC1232LCD
A5 U613	1826-1409	8	1	IC 1013	10858	LT1013CN8
A5 U614	1826-0315	3	1	IC 348	03406	LM348N

Table B-12. 8130A Option 020 Timing Board Parts List (continued)

Reference	HP Part #	CD	Qty	Description	Manuf'r	Part #
A5 U618	1826-0916	0	1	ANLG SW AD7511DI	03285	AD7511DIKN
A5 U700	1DP9-0001	9	1	IC TIMG GEN 500	28480	1DP9-0001
A5 U701	1DP6-0001	3	1	IC COUNTER 200M	28480	1DP6-0001
A5 U710	1826-1553	3	1	IC 1014	10858	LT1014DN
A5 U711	1826-0774	8	1	IC LM385BZ-1.2	03406	LM385BZ-1.2
A5 U712	1826-1341	7	1	D/A 12-DGT	03406	DAC1232LCD
A5 U713	1826-1409	8	1	IC 1013	10858	LT1013CN8
A5 U714	1826-0315	3	1	IC 348	03406	LM348N
A5 U718	1826-0916	0	1	ANLG SW AD7511DI	03285	AD7511DIKN
A5 VR300	1902-0955	9	1	DIO-ZNR 7.5V 5%	02037	
A5 VR400	1902-0955	9	1	DIO-ZNR 7.5V 5%	02037	
A5 VR500	1902-0955	9	1	DIO-ZNR 7.5V 5%	02037	
A5 VR600	1902-0955	9	1	DIO-ZNR 7.5V 5%	02037	
A5 VR700	1902-0955	9	1	DIO-ZNR 7.5V 5%	02037	
A5 W100	1258-0141	8	1	JUMPER-REM	01380	530153-2
A5 W300	08131-61650	4	1	CBL AY PC 15CM	28480	08131-61650
A5 W301	08130-61655	8	1	CBL AY TOUTIN	28480	08130-61655
A5 W400	08131-61672	0	1	CBL SET DELAY A	28480	08131-61672
A5 W500	08130-61670	7	1	CBL SET OUT 30-	28480	08130-61670
A5 W600	08131-61672	0	1	CBL SET DELAY A	28480	08131-61672
A5 W700	08130-61671	8	1	CBL SET DEL27-3	28480	08130-61671

Table B-13. 8130A Option 020 Channel 2 Board Parts List

Reference	HP Part #	CD	Qty	Description	Manuf'r	Part #
A27	08130-66527	3	1	BD AY CHAN 2 SET	28480	08130-66527
A27A417	08130-66417	0	1	BD AY SLP SMD O	28480	08130-66417
A27C2	0160-4535	4	1	CAP 1uF 50 V	02010	SR305C105KAAH
A27C3	0160-5746	1	1	CAP 0.1uF 50 V	06121	B37987-T5104-M11
A27C4	0160-3873	1	1	CAP 4.7pF 200 V	06352	FD12C0G2D4R7D
A27C5	0160-3873	1	1	CAP 4.7pF 200 V	06352	FD12C0G2D4R7D
A27C6	0160-5746	1	1	CAP 0.1uF 50 V	06121	B37987-T5104-M11
A27C7	0160-5746	1	1	CAP 0.1uF 50 V	06121	B37987-T5104-M11
A27C8	0160-4535	4	1	CAP 1uF 50 V	02010	SR305C105KAAH
A27C11	0160-5746	1	1	CAP 0.1uF 50 V	06121	B37987-T5104-M11
A27C12	0160-5746	1	1	CAP 0.1uF 50 V	06121	B37987-T5104-M11
A27C13	0160-5735	8	1	CAP 10pF 100 V	06121	B37979-J1100-J34
A27C14	0160-5735	8	1	CAP 10pF 100 V	06121	B37979-J1100-J34
A27C15	0160-5735	8	1	CAP 10pF 100 V	06121	B37979-J1100-J34
A27C16	0160-4535	4	1	CAP 1uF 50 V	02010	SR305C105KAAH
A27C17*	0160-3873	1		CAP 4.7pF 200 V	06352	FD12C0G2D4R7D
A27C18*	0160-3873	1		CAP 4.7pF 200 V	06352	FD12C0G2D4R7D
A27C101	0160-6623	5	1	CAP 0.1uF 50 V	02010	SA115C104MAAH
A27C103	0160-5730	3	1	CAP 100pF 100 V	06121	B37979-J1101-J034
A27C104	0160-5730	3	1	CAP 100pF 100 V	06121	B37979-J1101-J034

Table B-13. 8130A Option 020 Channel 2 Board Parts List (continued)

Reference	HP Part #	CD	Qty	Description	Manuf'r	Part #
A27C105	0160-5726	7	1	CAP 0.01uF 100 V	06121	B37987-J1103-M034
A27C106	0160-5726	7	1	CAP 0.01uF 100 V	06121	B37987-J1103-M034
A27C108	0160-6623	5	1	CAP 0.1uF 50 V	02010	SA115C104MAAH
A27C111	0160-5728	9	1	CAP 1000pF 100 V	06121	B37986-J1102-J034
A27C113	0160-5728	9	1	CAP 1000pF 100 V	06121	B37986-J1102-J034
A27C115	0160-5728	9	1	CAP 1000pF 100 V	06121	B37986-J1102-J034
A27C117	0160-5728	9	1	CAP 1000pF 100 V	06121	B37986-J1102-J034
A27C119	0160-5728	9	1	CAP 1000pF 100 V	06121	B37986-J1102-J034
A27C121	0160-5728	9	1	CAP 1000pF 100 V	06121	B37986-J1102-J034
A27C123	0160-6623	5	1	CAP 0.1uF 50 V	02010	SA115C104MAAH
A27C124	0160-6500	7	1	CAP 0.01uF 100 V	02010	SA101C103KAAH
A27C132	0160-6623	5	1	CAP 0.1uF 50 V	02010	SA115C104MAAH
A27C134	0160-6500	7	1	CAP 0.01uF 100 V	02010	SA101C103KAAH
A27C135	0160-5726	7	1	CAP 0.01uF 100 V	06121	B37987-J1103-M034
A27C136	0160-5746	1	1	CAP 0.1uF 50 V	06121	B37987-T5104-M11
A27C137	0160-5746	1	1	CAP 0.1uF 50 V	06121	B37987-T5104-M11
A27C150	0160-5746	1	1	CAP 0.1uF 50 V	06121	B37987-T5104-M11
A27C151	0160-6623	5	1	CAP 0.1uF 50 V	02010	SA115C104MAAH
A27C152	0160-6623	5	1	CAP 0.1uF 50 V	02010	SA115C104MAAH
A27C153	0160-6623	5	1	CAP 0.1uF 50 V	02010	SA115C104MAAH
A27C154	0160-5730	3	1	CAP 100pF 100 V	06121	B37979-J1101-J034
A27C155	0160-5730	3	1	CAP 100pF 100 V	06121	B37979-J1101-J034
A27C156	0160-5730	3	1	CAP 100pF 100 V	06121	B37979-J1101-J034
A27C157	0160-5730	3	1	CAP 100pF 100 V	06121	B37979-J1101-J034
A27C158	0160-5726	7	1	CAP 0.01uF 100 V	06121	B37987-J1103-M034
A27C159	0160-5726	7	1	CAP 0.01uF 100 V	06121	B37987-J1103-M034
A27C160	0160-6623	5	1	CAP 0.1uF 50 V	02010	SA115C104MAAH
A27C161	0160-6500	7	1	CAP 0.01uF 100 V	02010	SA101C103KAAH
A27C162	0160-6500	7	1	CAP 0.01uF 100 V	02010	SA101C103KAAH
A27C163	0160-4801	7	1	CAP 100pF 100 V	02010	SA102A101JAAH

Table B-13. 8130A Option 020 Channel 2 Board Parts List (continued)

Reference	HP Part #	CD	Qty	Description	Manuf'r	Part #
A27C200	0160-6500	7	1	CAP 0.01uF 100 V	02010	SA101C103KAAH
A27C201	0160-5726	7	1	CAP 0.01uF 100 V	06121	B37987-J1103-M034
A27C202	0160-6623	5	1	CAP 0.1uF 50 V	02010	SA115C104MAAH
A27C203	0160-6623	5	1	CAP 0.1uF 50 V	02010	SA115C104MAAH
A27C204	0160-6623	5	1	CAP 0.1uF 50 V	02010	SA115C104MAAH
A27C205	0160-5726	7	1	CAP 0.01uF 100 V	06121	B37987-J1103-M034
A27C207	0160-6500	7	1	CAP 0.01uF 100 V	02010	SA101C103KAAH
A27C208	0160-6623	5	1	CAP 0.1uF 50 V	02010	SA115C104MAAH
A27C209	0160-5726	7	1	CAP 0.01uF 100 V	06121	B37987-J1103-M034
A27C210	0160-5726	7	1	CAP 0.01uF 100 V	06121	B37987-J1103-M034
A27C211	0160-5726	7	1	CAP 0.01uF 100 V	06121	B37987-J1103-M034
A27C212	0160-6500	7	1	CAP 0.01uF 100 V	02010	SA101C103KAAH
A27C214	0160-6623	5	1	CAP 0.1uF 50 V	02010	SA115C104MAAH
A27C215	0160-6623	5	1	CAP 0.1uF 50 V	02010	SA115C104MAAH
A27C216	0160-6623	5	1	CAP 0.1uF 50 V	02010	SA115C104MAAH
A27C218	0160-6623	5	1	CAP 0.1uF 50 V	02010	SA115C104MAAH
A27C300	0160-5746	1	1	CAP 0.1uF 50 V	06121	B37987-T5104-M11
A27C301	0160-5746	1	1	CAP 0.1uF 50 V	06121	B37987-T5104-M11
A27C302	0160-5728	9	1	CAP 1000pF 100 V	06121	B37986-J1102-J034
A27C303	0160-4535	4	1	CAP 1uF 50 V	02010	SR305C105KAAH
A27C304	0160-6623	5	1	CAP 0.1uF 50 V	02010	SA115C104MAAH
A27C305	0160-6623	5	1	CAP 0.1uF 50 V	02010	SA115C104MAAH
A27C306	0160-6623	5	1	CAP 0.1uF 50 V	02010	SA115C104MAAH
A27C307	0160-6623	5	1	CAP 0.1uF 50 V	02010	SA115C104MAAH
A27C308	0160-5746	1	1	CAP 0.1uF 50 V	06121	B37987-T5104-M11
A27C309	0160-6623	5	1	CAP 0.1uF 50 V	02010	SA115C104MAAH
A27C310	0160-6500	7	1	CAP 0.01uF 100 V	02010	SA101C103KAAH
A27C311	0160-6500	7	1	CAP 0.01uF 100 V	02010	SA101C103KAAH
A27C312	0160-5726	7	1	CAP 0.01uF 100 V	06121	B37987-J1103-M034
A27C313	0160-6500	7	1	CAP 0.01uF 100 V	02010	SA101C103KAAH

Table B-13. 8130A Option 020 Channel 2 Board Parts List (continued)

Reference	HP Part #	CD	Qty	Description	Manuf'r	Part #
A27C314	0160-6500	7	1	CAP 0.01uF 100 V	02010	SA101C103KAAH
A27C315	0160-6500	7	1	CAP 0.01uF 100 V	02010	SA101C103KAAH
A27C316	0160-6500	7	1	CAP 0.01uF 100 V	02010	SA101C103KAAH
A27C317	0160-6500	7	1	CAP 0.01uF 100 V	02010	SA101C103KAAH
A27C318	0160-6623	5	1	CAP 0.1uF 50 V	02010	SA115C104MAAH
A27C319	0160-6623	5	1	CAP 0.1uF 50 V	02010	SA115C104MAAH
A27C320	0160-5746	1	1	CAP 0.1uF 50 V	06121	B37987-T5104-M11
A27C321	0160-5746	1	1	CAP 0.1uF 50 V	06121	B37987-T5104-M11
A27C323	0160-5730	3	1	CAP 100pF 100 V	06121	B37979-J1101-J034
A27C324	0160-5730	3	1	CAP 100pF 100 V	06121	B37979-J1101-J034
A27C326	0160-5746	1	1	CAP 0.1uF 50 V	06121	B37987-T5104-M11
A27C327	0160-5746	1	1	CAP 0.1uF 50 V	06121	B37987-T5104-M11
A27C328	0160-6623	5	1	CAP 0.1uF 50 V	02010	SA115C104MAAH
A27C329	0160-5746	1	1	CAP 0.1uF 50 V	06121	B37987-T5104-M11
A27C330	0160-5746	1	1	CAP 0.1uF 50 V	06121	B37987-T5104-M11
A27C331	0160-5746	1	1	CAP 0.1uF 50 V	06121	B37987-T5104-M11
A27C332	0160-5746	1	1	CAP 0.1uF 50 V	06121	B37987-T5104-M11
A27C333	0160-5726	7	1	CAP 0.01uF 100 V	06121	B37987-J1103-M034
A27C334	0160-5726	7	1	CAP 0.01uF 100 V	06121	B37987-J1103-M034
A27C335	0160-4535	4	1	CAP 1uF 50 V	02010	SR305C105KAAH
A27C400	0160-5726	7	1	CAP 0.01uF 100 V	06121	B37987-J1103-M034
A27C401	0160-5726	7	1	CAP 0.01uF 100 V	06121	B37987-J1103-M034
A27C402	0160-6623	5	1	CAP 0.1uF 50 V	02010	SA115C104MAAH
A27C403	0160-5726	7	1	CAP 0.01uF 100 V	06121	B37987-J1103-M034
A27C404	0160-5726	7	1	CAP 0.01uF 100 V	06121	B37987-J1103-M034
A27C405	0160-6623	5	1	CAP 0.1uF 50 V	02010	SA115C104MAAH
A27C406	0160-5726	7	1	CAP 0.01uF 100 V	06121	B37987-J1103-M034
A27C407	0160-5726	7	1	CAP 0.01uF 100 V	06121	B37987-J1103-M034
A27C409	0160-5726	7	1	CAP 0.01uF 100 V	06121	B37987-J1103-M034
A27C410	0160-6623	5	1	CAP 0.1uF 50 V	02010	SA115C104MAAH

Table B-13. 8130A Option 020 Channel 2 Board Parts List (continued)

Reference	HP Part #	CD	Qty	Description	Manuf'r	Part #
A27C411	0160-5726	7	1	CAP 0.01uF 100 V	06121	B37987-J1103-M034
A27C412	0160-5726	7	1	CAP 0.01uF 100 V	06121	B37987-J1103-M034
A27C413	0160-5726	7	1	CAP 0.01uF 100 V	06121	B37987-J1103-M034
A27C414	0160-5726	7	1	CAP 0.01uF 100 V	06121	B37987-J1103-M034
A27C416	0160-5726	7	1	CAP 0.01uF 100 V	06121	B37987-J1103-M034
A27C417	0160-5726	7	1	CAP 0.01uF 100 V	06121	B37987-J1103-M034
A27C418	0160-6500	7	1	CAP 0.01uF 100 V	02010	SA101C103KAAH
A27C419	0160-5726	7	1	CAP 0.01uF 100 V	06121	B37987-J1103-M034
A27C420	0160-5726	7	1	CAP 0.01uF 100 V	06121	B37987-J1103-M034
A27C421	0160-5726	7	1	CAP 0.01uF 100 V	06121	B37987-J1103-M034
A27C422	0160-5726	7	1	CAP 0.01uF 100 V	06121	B37987-J1103-M034
A27C423	0160-5726	7	1	CAP 0.01uF 100 V	06121	B37987-J1103-M034
A27C424	0160-5726	7	1	CAP 0.01uF 100 V	06121	B37987-J1103-M034
A27C425	0160-5726	7	1	CAP 0.01uF 100 V	06121	B37987-J1103-M034
A27C426	0160-6623	5	1	CAP 0.1uF 50 V	02010	SA115C104MAAH
A27C427	0160-5726	7	1	CAP 0.01uF 100 V	06121	B37987-J1103-M034
A27C428	0160-5726	7	1	CAP 0.01uF 100 V	06121	B37987-J1103-M034
A27C429	0160-5746	1	1	CAP 0.1uF 50 V	06121	B37987-T5104-M11
A27C430	0160-5746	1	1	CAP 0.1uF 50 V	06121	B37987-T5104-M11
A27C431	0160-5746	1	1	CAP 0.1uF 50 V	06121	B37987-T5104-M11
A27C432	0160-5746	1	1	CAP 0.1uF 50 V	06121	B37987-T5104-M11
A27C433	0160-5746	1	1	CAP 0.1uF 50 V	06121	B37987-T5104-M11
A27C436	0160-5746	1	1	CAP 0.1uF 50 V	06121	B37987-T5104-M11
A27C437	0160-5726	7	1	CAP 0.01uF 100 V	06121	B37987-J1103-M034
A27C438	0160-5726	7	1	CAP 0.01uF 100 V	06121	B37987-J1103-M034
A27C900	0160-5726	7	1	CAP 0.01uF 100 V	06121	B37987-J1103-M034
A27C901	0160-5747	2	1	CAP 0.047uF 50 V	06121	B37987-J5473-M034
A27C902	0160-5726	7	1	CAP 0.01uF 100 V	06121	B37987-J1103-M034
A27C903	0160-5747	2	1	CAP 0.047uF 50 V	06121	B37987-J5473-M034
A27C904	0160-5726	7	1	CAP 0.01uF 100 V	06121	B37987-J1103-M034

Table B-13. 8130A Option 020 Channel 2 Board Parts List (continued)

Reference	HP Part #	CD	Qty	Description	Manuf'r	Part #
A27C905	0160-6500	7	1	CAP 0.01uF 100 V	02010	SA101C103KAAH
A27C906	0160-6500	7	1	CAP 0.01uF 100 V	02010	SA101C103KAAH
A27C907	0160-6500	7	1	CAP 0.01uF 100 V	02010	SA101C103KAAH
A27C908	0160-6500	7	1	CAP 0.01uF 100 V	02010	SA101C103KAAH
A27C909	0160-6500	7	1	CAP 0.01uF 100 V	02010	SA101C103KAAH
A27C910	0160-6500	7	1	CAP 0.01uF 100 V	02010	SA101C103KAAH
A27C911	0160-6500	7	1	CAP 0.01uF 100 V	02010	SA101C103KAAH
A27C912	0160-5726	7	1	CAP 0.01uF 100 V	06121	B37987-J1103-M034
A27C913	0160-5726	7	1	CAP 0.01uF 100 V	06121	B37987-J1103-M034
A27CP1	0180-4129	4	1	CAP 1uF 35 V	04200	173D105X9035V
A27CP2	0180-4129	4	1	CAP 1uF 35 V	04200	173D105X9035V
A27CP110	0180-0116	1	1	CAP 6.8uF 35 V	04200	150D685X9035B2-DYS
A27CP112	0180-0374	3	1	CAP 10uF 20 V	04200	150D106X9020B2-DYS
A27CP114	0180-0374	3	1	CAP 10uF 20 V	04200	150D106X9020B2-DYS
A27CP116	0180-0116	1	1	CAP 6.8uF 35 V	04200	150D685X9035B2-DYS
A27CP118	0180-0116	1	1	CAP 6.8uF 35 V	04200	150D685X9035B2-DYS
A27CP120	0180-0374	3	1	CAP 10uF 20 V	04200	150D106X9020B2-DYS
A27CP121	0180-4129	4	1	CAP 1uF 35 V	04200	173D105X9035V
A27CP150	0180-4129	4	1	CAP 1uF 35 V	04200	173D105X9035V
A27CP200	0180-0374	3	1	CAP 10uF 20 V	04200	150D106X9020B2-DYS
A27CP300	0180-2979	8	1	CAP 220uF 16 V	00493	SM16VB221M10X12
A27CP301	0180-2979	8	1	CAP 220uF 16 V	00493	SM16VB221M10X12
A27CP302	0180-2979	8	1	CAP 220uF 16 V	00493	SM16VB221M10X12
A27CP303	0180-2979	8	1	CAP 220uF 16 V	00493	SM16VB221M10X12
A27CR1	1901-0535	9	1	DIO- SCHOTTKY SM	02062	50825511
A27CR2	1901-0535	9	1	DIO- SCHOTTKY SM	02062	50825511
A27CR3	1901-0535	9	1	DIO- SCHOTTKY SM	02062	50825511
A27CR4	1901-0535	9	1	DIO- SCHOTTKY SM	02062	50825511
A27CR100	1901-0535	9	1	DIO- SCHOTTKY SM	02062	50825511
A27CR101	1901-0535	9	1	DIO- SCHOTTKY SM	02062	50825511

Table B-13. 8130A Option 020 Channel 2 Board Parts List (continued)

Reference	HP Part #	CD	Qty	Description	Manuf'r	Part #
A27CR102	1901-0535	9	1	DIO- SCHOTTKY SM	02062	50825511
A27CR150	1901-0033	2	1	DIO-GEN PRP	03406	
A27CR151	1901-0535	9	1	DIO- SCHOTTKY SM	02062	50825511
A27CR152	1901-0535	9	1	DIO- SCHOTTKY SM	02062	50825511
A27CR153	1901-0535	9	1	DIO- SCHOTTKY SM	02062	50825511
A27CR154	1901-0535	9	1	DIO- SCHOTTKY SM	02062	50825511
A27CR155	1901-0535	9	1	DIO- SCHOTTKY SM	02062	50825511
A27CR156	1901-0535	9	1	DIO- SCHOTTKY SM	02062	50825511
A27CR201	1901-0535	9	1	DIO- SCHOTTKY SM	02062	50825511
A27CR202	1901-0535	9	1	DIO- SCHOTTKY SM	02062	50825511
A27CR206	1901-0376	6	1	DIO-GEN PRP	00046	1N3595
A27CR207	1901-0376	6	1	DIO-GEN PRP	00046	1N3595
A27CR209	1901-0376	6	1	DIO-GEN PRP	00046	1N3595
A27CR210	1901-0376	6	1	DIO-GEN PRP	00046	1N3595
A27CR300	1901-1098	1	1	DIO-1N4150	00746	
A27CR301	1901-1098	1	1	DIO-1N4150	00746	
A27CR303	1901-1098	1	1	DIO-1N4150	00746	
A27CR305	1901-1098	1	1	DIO-1N4150	00746	
A27CR306	1901-0033	2	1	DIO-GEN PRP	03406	
A27CR307	1901-0535	9	1	DIO- SCHOTTKY SM	02062	50825511
A27CR400	1901-0535	9	1	DIO- SCHOTTKY SM	02062	50825511
A27CR401	1901-1098	1	1	DIO-1N4150	00746	
A27CR404	1901-0535	9	1	DIO- SCHOTTKY SM	02062	50825511
A27CR405	1901-0535	9	1	DIO- SCHOTTKY SM	02062	50825511
A27CR406	1901-0047	8	1	DIO-SWITCHING	03406	
A27CR901	1901-1098	1	1	DIO-1N4150	00746	
A27CR902	1901-1098	1	1	DIO-1N4150	00746	
A27CR906	1901-0033	2	1	DIO-GEN PRP	03406	
A27CR910	1901-1098	1	1	DIO-1N4150	00746	
A27CR911	1901-1098	1	1	DIO-1N4150	00746	

Table B-13. 8130A Option 020 Channel 2 Board Parts List (continued)

Reference	HP Part #	CD	Qty	Description	Manuf'r	Part #
A27CR912	1901-1098	1	1	DIO-1N4150	00746	
A27CR913	1901-1098	1	1	DIO-1N4150	00746	
A27CR915	1901-1098	1	1	DIO-1N4150	00746	
A27CV1	0121-0491	1	1	CAP 30pF 5pF 50	09538	518-003 A 5-30
A27J1	1251-8324	1	1	CONN-POST-TP-HDR	04486	G06M96P4BEBL-004-715
A27J2	1250-2066	4	1	CONN-RF SMB	05769	51-051-0359
A27J3	1250-2066	4	1	CONN-RF SMB	05769	51-051-0359
A27J4	1252-3245	7	1	CONN ELAST 38	09922	NE 0.2P 38.5L 3.0H 3.6W
A27J5	1252-3244	6	1	CONN ELAST 38	09922	NE 0.4P 38.5L 3.5H 4.2W
A27J6	1252-2649	3	1	CONN ELAST 43LG	09922	NE 0.2P 43.0L 3.0H 3.6W
A27J7	1252-2647	1	1	CONN ELAST 0.4P	09922	NE 0.4P 43.0L 3.5H 4.2W
A27J8	1252-3244	6	1	CONN ELAST 38	09922	NE 0.4P 38.5L 3.5H 4.2W
A27J9	1252-3245	7	1	CONN ELAST 38	09922	NE 0.2P 38.5L 3.0H 3.6W
A27J10	1252-2647	1	1	CONN ELAST 0.4P	09922	NE 0.4P 43.0L 3.5H 4.2W
A27J11	1200-1475	2	1	SKT-STRP 17-CONT	06665	SL-117-T-12
A27J12	1200-1474	1	1	SKT-STRP 13-CONT	06665	SL-113-T-12
A27J13	1200-1473	0	1	SKT-STRP 10-CONT	06665	SL-110-T-12
A27J14	1200-1472	9	1	SKT-STRP 8-CONT	06665	SL-108-T-12
A27J15	1200-1471	8	1	SKT-STRP 6-CONT	06665	SL-106-T-12
A27J16	1252-2649	3	1	CONN ELAST 43LG	09922	NE 0.2P 43.0L 3.0H 3.6W
A27J100	1251-4682	6	1	CONN-POST-TP-HDR	03394	1102-1-103-02
A27J101	1251-4682	6	1	CONN-POST-TP-HDR	03394	1102-1-103-02
A27J300	1251-5380	3	1	CONN-POST-TP-HDR	02946	68000-602
A27K1	0490-1667	6	1	RLY 2C 12VDC	09809	RG2T-12V
A27K2	0490-1667	6	1	RLY 2C 12VDC	09809	RG2T-12V
A27K3	0490-1667	6	1	RLY 2C 12VDC	09809	RG2T-12V
A27K4	0490-1665	4	1	RLY 1C 12VDC	01850	RG1ET-12V
A27K5	0490-1665	4	1	RLY 1C 12VDC	01850	RG1ET-12V
A27K6	0490-1405	0	1	RLY 2C 12VDC	01850	DS2E-S-DC12V-C-H118
A27L1	5081-1973	5	1	INDUCTANCE 3BEA	28480	5081-1973

Table B-13. 8130A Option 020 Channel 2 Board Parts List (continued)

Reference	HP Part #	CD	Qty	Description	Manuf'r	Part #
A27L2	5081-1973	5	1	INDUCTANCE 3BEA	28480	5081-1973
A27L3	5081-1973	5	1	INDUCTANCE 3BEA	28480	5081-1973
A27L4	5081-1973	5	1	INDUCTANCE 3BEA	28480	5081-1973
A27L7	9140-0114	4	1	L 10UH +-10%	03273	15M102K
A27L8	9140-0114	4	1	L 10UH +-10%	03273	15M102K
A27L100	9100-1788	6	1	CORE-FERRITE	02995	VK200 20/4B
A27L101	9100-1788	6	1	CORE-FERRITE	02995	VK200 20/4B
A27L102	9100-1788	6	1	CORE-FERRITE	02995	VK200 20/4B
A27L103	9100-1788	6	1	CORE-FERRITE	02995	VK200 20/4B
A27L104	9100-1788	6	1	CORE-FERRITE	02995	VK200 20/4B
A27L105	9100-1788	6	1	CORE-FERRITE	02995	VK200 20/4B
A27MP1	08130-00601	6	1	SHLD OUTP BD	28480	08130-00601
A27MP20	08130-21101	5	1	HEAT SINK	28480	08130-21101
A27MP21	08130-40502	0	1	HYBRID FRAME	28480	08130-40502
A27MP23	0340-1236	8	1	INSULATOR	28480	0340-1236
A27MP26	3050-0960	1	2	WASHER-SHLDR 3.0	05947	V5359
A27MP27	0515-0659	8	4	SCR-MACHINE	05610	
A27MP80	1400-1437	0	6	CLAMP-CABLE	11808	
A27MP108	1200-0541	1	1	SKT-IC-DIP 24-CO	01380	2-641604-1
A27MP302	1205-0295	2	1	HEAT SINK	02608	6107B-14
A27MP303	1205-0295	2	1	HEAT SINK	02608	6107B-14
A27MP304	0340-1074	2	1	INSUL-XSTR	05447	3223-07FR-58-AC
A27MP305	0340-1074	2	1	INSUL-XSTR	05447	3223-07FR-58-AC
A27MP400	1205-0213	4	1	HEAT SINK	02608	2228B
A27MP401	1205-0213	4	1	HEAT SINK	02608	2228B
A27MP402	1205-0213	4	1	HEAT SINK	02608	2228B
A27MP403	1205-0011	0	1	HEAT SINK	02608	2226B
A27MP407	1205-0213	4	1	HEAT SINK	02608	2228B
A27MP409	1205-0213	4	1	HEAT SINK	02608	2228B
A27MP904	1205-0213	4	1	HEAT SINK	02608	2228B

Table B-13. 8130A Option 020 Channel 2 Board Parts List (continued)

Reference	HP Part #	CD	Qty	Description	Manuf'r	Part #
A27Q1	1854-1028	6	1	XSTR NPN SI	02037	2N3904
A27Q2	1854-1028	6	1	XSTR NPN SI	02037	2N3904
A27Q3	1854-1028	6	1	XSTR NPN SI	02037	2N3904
A27Q4	1854-1028	6	1	XSTR NPN SI	02037	2N3904
A27Q101	1854-0039	7	1	XSTR NPN 2N3053S	02037	2N3053S
A27Q102	1853-0569	6	1	XSTR PNP SI	02037	
A27Q200	1854-0583	6	1	XSTR NPN SI	02037	MPS-A18
A27Q201	1854-0583	6	1	XSTR NPN SI	02037	MPS-A18
A27Q202	1855-0309	6	1	MOSFET 2N4352 P-	02037	2N4352
A27Q203	1854-1028	6	1	XSTR NPN SI	02037	2N3904
A27Q204	1854-0477	7	1	XSTR NPN 2N2222A	02037	2N2222A
A27Q300	1854-0828	2	1	XSTR NPN SI	00039	NTD560
A27Q301	1853-0468	4	1	XSTR PNP SI DARL	02037	TIP-127
A27Q302	1853-0569	6	1	XSTR PNP SI	02037	
A27Q303	1853-0569	6	1	XSTR PNP SI	02037	
A27Q304	1853-0569	6	1	XSTR PNP SI	02037	
A27Q305	1853-0569	6	1	XSTR PNP SI	02037	
A27Q307	1854-1028	6	1	XSTR NPN SI	02037	2N3904
A27Q308	1853-0563	0	1	XSTR PNP SI	02037	2N3906(SEL)
A27Q309	1854-1028	6	1	XSTR NPN SI	02037	2N3904
A27Q400	1853-0051	1	1	XSTR PNP 2N4037	03799	2N4037
A27Q401	1854-0637	1	1	XSTR NPN 2N2219A	02037	2N2219A
A27Q402	1853-0314	9	1	XSTR PNP 2N2905A	02037	2N2905A
A27Q404	1854-0392	5	1	XSTR NPN SI	02037	2N5088
A27Q405	1854-0392	5	1	XSTR NPN SI	02037	2N5088
A27Q407	1854-0597	2	1	XSTR NPN 2N5943	02037	2N5943
A27Q408	1854-0392	5	1	XSTR NPN SI	02037	2N5088
A27Q409	1853-0314	9	1	XSTR PNP 2N2905A	02037	2N2905A
A27Q410	1853-0314	9	1	XSTR PNP 2N2905A	02037	2N2905A
A27Q411	1853-0314	9	1	XSTR PNP 2N2905A	02037	2N2905A

Table B-13. 8130A Option 020 Channel 2 Board Parts List (continued)

Reference	HP Part #	CD	Qty	Description	Manuf'r	Part #
A27Q412	1853-0569	6	1	XSTR PNP SI	02037	
A27Q413	1853-0569	6	1	XSTR PNP SI	02037	
A27Q414	1854-0392	5	1	XSTR NPN SI	02037	2N5088
A27Q415	1854-0392	5	1	XSTR NPN SI	02037	2N5088
A27Q416	1854-1028	6	1	XSTR NPN SI	02037	2N3904
A27Q418	1853-0563	0	1	XSTR PNP SI	02037	2N3906(SEL)
A27Q419	1853-0569	6	1	XSTR PNP SI	02037	
A27Q421	1854-1028	6	1	XSTR NPN SI	02037	2N3904
A27Q900	1854-1028	6	1	XSTR NPN SI	02037	2N3904
A27Q901	1855-0751	2	1	MOSFET N-CHAN	02883	VN0808M
A27Q902	1855-0751	2	1	MOSFET N-CHAN	02883	VN0808M
A27Q903	1854-0637	1	1	XSTR NPN 2N2219A	02037	2N2219A
A27Q904	1853-0051	1	1	XSTR PNP 2N4037	03799	2N4037
A27Q905	1853-0563	0	1	XSTR PNP SI	02037	2N3906(SEL)
A27R2	0698-4453	4	1	RES 402 1% .125W	00746	CRB14 OR CRB25
A27R3	0757-0401	0	1	RES 100 1% .125W	00746	CRB14 OR CRB25
A27R4	0757-0401	0	1	RES 100 1% .125W	00746	CRB14 OR CRB25
A27R5	0698-4453	4	1	RES 402 1% .125W	00746	CRB14 OR CRB25
A27R6	0698-4435	2	1	RES 2.49K 1% .12	00746	CRB14 OR CRB25
A27R7	0698-4435	2	1	RES 2.49K 1% .12	00746	CRB14 OR CRB25
A27R8	0757-0999	1	1	RES 47.5 1% .5W	01074	H2
A27R9	0757-0999	1	1	RES 47.5 1% .5W	01074	H2
A27R12	0757-0389	3	1	RES 33.2 1% .125	00746	CRB14 OR CRB25
A27R13	0757-0389	3	1	RES 33.2 1% .125	00746	CRB14 OR CRB25
A27R14	0698-4409	0	1	RES 127 1% .125W	00746	CRB14 OR CRB25
A27R15	0757-0283	6	1	RES 2K 1% .125W	00746	CRB14 OR CRB25
A27R16	0757-0401	0	1	RES 100 1% .125W	00746	CRB14 OR CRB25
A27R17	0757-0401	0	1	RES 100 1% .125W	00746	CRB14 OR CRB25
A27R18	0757-0401	0	1	RES 100 1% .125W	00746	CRB14 OR CRB25
A27R19	0757-0401	0	1	RES 100 1% .125W	00746	CRB14 OR CRB25

Table B-13. 8130A Option 020 Channel 2 Board Parts List (continued)

Reference	HP Part #	CD	Qty	Description	Manuf'r	Part #
A27R20	0757-0411	2	1	RES 332 1% .125W	00746	CRB14 OR CRB25
A27R21	0757-0411	2	1	RES 332 1% .125W	00746	CRB14 OR CRB25
A27R22	0757-0807	0	1	RES 274 1% .5W T	01074	H2
A27R23	0757-0807	0	1	RES 274 1% .5W T	01074	H2
A27R24	0699-2732	0	1	RES 59 1% 2W TF	05524	CPF-2 5900 F T-1
A27R25	0699-2732	0	1	RES 59 1% 2W TF	05524	CPF-2 5900 F T-1
A27R26	0757-0401	0	1	RES 100 1% .125W	00746	CRB14 OR CRB25
A27R27	0757-0401	0	1	RES 100 1% .125W	00746	CRB14 OR CRB25
A27R100	0757-0274	5	1	RES 1.21K 1% .12	00746	CRB14 OR CRB25
A27R101	0698-3444	1	1	RES 316 1% .125W	00746	CRB14 OR CRB25
A27R102	0698-6624	5	1	RES 2K .1% .125W	00746	CRB14 OR CRB25
A27R104	0698-0082	7	1	RES 464 1% .125W	00746	CRB14 OR CRB25
A27R105	0698-6624	5	1	RES 2K .1% .125W	00746	CRB14 OR CRB25
A27R106	0698-6360	6	1	RES 10K .1% .125	00746	CRB14 OR CRB25
A27R107	0698-4445	4	1	RES 5.76K 1% .12	00746	CRB14 OR CRB25
A27R108	0698-4479	4	1	RES 14K 1% .125W	00746	CRB14 OR CRB25
A27R109	0757-0442	9	1	RES 10K 1% .125W	00746	CRB14 OR CRB25
A27R110	0698-6360	6	1	RES 10K .1% .125	00746	CRB14 OR CRB25
A27R111	0757-0442	9	1	RES 10K 1% .125W	00746	CRB14 OR CRB25
A27R112	0757-0280	3	1	RES 1K 1% .125W	00746	CRB14 OR CRB25
A27R113	0757-0442	9	1	RES 10K 1% .125W	00746	CRB14 OR CRB25
A27R114	0757-0438	3	1	RES 5.11K 1% .12	00746	CRB14 OR CRB25
A27R115	0757-0449	6	1	RES 20K 1% .125W	00746	CRB14 OR CRB25
A27R116	0757-0442	9	1	RES 10K 1% .125W	00746	CRB14 OR CRB25
A27R126	0698-4479	4	1	RES 14K 1% .125W	00746	CRB14 OR CRB25
A27R150	0757-0461	2	1	RES 68.1K 1% .12	00746	CRB14 OR CRB25
A27R151	0757-0199	3	1	RES 21.5K 1% .12	00746	CRB14 OR CRB25
A27R152	0757-0465	6	1	RES 100K 1% .125	00746	CRB14 OR CRB25
A27R153	0698-8827	4	1	RES 1M 1% .125W	00746	CRB14 OR CRB25
A27R154	0757-0442	9	1	RES 10K 1% .125W	00746	CRB14 OR CRB25

Table B-13. 8130A Option 020 Channel 2 Board Parts List (continued)

Reference	HP Part #	CD	Qty	Description	Manuf'r	Part #
A27R155	0757-0442	9	1	RES 10K 1% .125W	00746	CRB14 OR CRB25
A27R156	0757-0280	3	1	RES 1K 1% .125W	00746	CRB14 OR CRB25
A27R157	0698-8958	2	1	RES 511K 1% .125	00746	CRB14 OR CRB25
A27R158	0757-0442	9	1	RES 10K 1% .125W	00746	CRB14 OR CRB25
A27R159	0757-0449	6	1	RES 20K 1% .125W	00746	CRB14 OR CRB25
A27R160	0698-0084	9	1	RES 2.15K 1% .12	00746	CRB14 OR CRB25
A27R161	0757-0442	9	1	RES 10K 1% .125W	00746	CRB14 OR CRB25
A27R162	0757-0280	3	1	RES 1K 1% .125W	00746	CRB14 OR CRB25
A27R163	0698-8958	2	1	RES 511K 1% .125	00746	CRB14 OR CRB25
A27R164	0757-0438	3	1	RES 5.11K 1% .12	00746	CRB14 OR CRB25
A27R165	0757-0442	9	1	RES 10K 1% .125W	00746	CRB14 OR CRB25
A27R166	0757-0442	9	1	RES 10K 1% .125W	00746	CRB14 OR CRB25
A27R167	0757-0280	3	1	RES 1K 1% .125W	00746	CRB14 OR CRB25
A27R168	0698-8958	2	1	RES 511K 1% .125	00746	CRB14 OR CRB25
A27R169	0757-0442	9	1	RES 10K 1% .125W	00746	CRB14 OR CRB25
A27R170	0757-0280	3	1	RES 1K 1% .125W	00746	CRB14 OR CRB25
A27R171	0698-8958	2	1	RES 511K 1% .125	00746	CRB14 OR CRB25
A27R172	0757-0438	3	1	RES 5.11K 1% .12	00746	CRB14 OR CRB25
A27R173	0757-0442	9	1	RES 10K 1% .125W	00746	CRB14 OR CRB25
A27R174	0757-0280	3	1	RES 1K 1% .125W	00746	CRB14 OR CRB25
A27R175	0757-0280	3	1	RES 1K 1% .125W	00746	CRB14 OR CRB25
A27R176	0757-0280	3	1	RES 1K 1% .125W	00746	CRB14 OR CRB25
A27R177	0757-0280	3	1	RES 1K 1% .125W	00746	CRB14 OR CRB25
A27R178	0698-3152	8	1	RES 3.48K 1% .12	00746	CRB14 OR CRB25
A27R179	0757-0438	3	1	RES 5.11K 1% .12	00746	CRB14 OR CRB25
A27R180	0698-3152	8	1	RES 3.48K 1% .12	00746	CRB14 OR CRB25
A27R181	0757-0438	3	1	RES 5.11K 1% .12	00746	CRB14 OR CRB25
A27R182	0757-0438	3	1	RES 5.11K 1% .12	00746	CRB14 OR CRB25
A27R183	0757-0274	5	1	RES 1.21K 1% .12	00746	CRB14 OR CRB25
A27R184	0698-3452	1	1	RES 147K 1% .125	00746	CRB14 OR CRB25

Table B-13. 8130A Option 020 Channel 2 Board Parts List (continued)

Reference	HP Part #	CD	Qty	Description	Manuf'r	Part #
A27R185	0757-0279	0	1	RES 3.16K 1% .12	00746	CRB14 OR CRB25
A27R186	0757-0438	3	1	RES 5.11K 1% .12	00746	CRB14 OR CRB25
A27R187	0757-0438	3	1	RES 5.11K 1% .12	00746	CRB14 OR CRB25
A27R188	0757-0442	9	1	RES 10K 1% .125W	00746	CRB14 OR CRB25
A27R189	0757-0442	9	1	RES 10K 1% .125W	00746	CRB14 OR CRB25
A27R190	0757-0442	9	1	RES 10K 1% .125W	00746	CRB14 OR CRB25
A27R191	0757-0442	9	1	RES 10K 1% .125W	00746	CRB14 OR CRB25
A27R192	0698-0084	9	1	RES 2.15K 1% .12	00746	CRB14 OR CRB25
A27R193	0757-0280	3	1	RES 1K 1% .125W	00746	CRB14 OR CRB25
A27R194	0757-0442	9	1	RES 10K 1% .125W	00746	CRB14 OR CRB25
A27R200	0757-0442	9	1	RES 10K 1% .125W	00746	CRB14 OR CRB25
A27R201	0757-0283	6	1	RES 2K 1% .125W	00746	CRB14 OR CRB25
A27R203	0757-0449	6	1	RES 20K 1% .125W	00746	CRB14 OR CRB25
A27R204	0698-3438	3	1	RES 147 1% .125W	00746	CRB14 OR CRB25
A27R206	0757-0283	6	1	RES 2K 1% .125W	00746	CRB14 OR CRB25
A27R207	0757-0283	6	1	RES 2K 1% .125W	00746	CRB14 OR CRB25
A27R208	0757-0199	3	1	RES 21.5K 1% .12	00746	CRB14 OR CRB25
A27R209	0757-0283	6	1	RES 2K 1% .125W	00746	CRB14 OR CRB25
A27R210	0698-0085	0	1	RES 2.61K 1% .12	00746	CRB14 OR CRB25
A27R212	0698-3155	1	1	RES 4.64K 1% .12	00746	CRB14 OR CRB25
A27R213	0698-3155	1	1	RES 4.64K 1% .12	00746	CRB14 OR CRB25
A27R214	0757-0442	9	1	RES 10K 1% .125W	00746	CRB14 OR CRB25
A27R215	0698-3155	1	1	RES 4.64K 1% .12	00746	CRB14 OR CRB25
A27R217	0757-0442	9	1	RES 10K 1% .125W	00746	CRB14 OR CRB25
A27R218	0757-0442	9	1	RES 10K 1% .125W	00746	CRB14 OR CRB25
A27R219	0757-0280	3	1	RES 1K 1% .125W	00746	CRB14 OR CRB25
A27R220	0757-0280	3	1	RES 1K 1% .125W	00746	CRB14 OR CRB25
A27R221	0698-0085	0	1	RES 2.61K 1% .12	00746	CRB14 OR CRB25
A27R222	0757-0403	2	1	RES 121 1% .125W	00746	CRB14 OR CRB25
A27R223	0757-0403	2	1	RES 121 1% .125W	00746	CRB14 OR CRB25

Table B-13. 8130A Option 020 Channel 2 Board Parts List (continued)

Reference	HP Part #	CD	Qty	Description	Manuf'r	Part #
A27R225	0757-0274	5	1	RES 1.21K 1% .12	00746	CRB14 OR CRB25
A27R226	0757-0416	7	1	RES 511 1% .125W	00746	CRB14 OR CRB25
A27R227	0757-0416	7	1	RES 511 1% .125W	00746	CRB14 OR CRB25
A27R276	0698-3441	8	1	RES 215 1% .125W	00746	CRB14 OR CRB25
A27R300	0698-3449	6	1	RES 28.7K 1% .12	00746	CRB14 OR CRB25
A27R301	0757-0442	9	1	RES 10K 1% .125W	00746	CRB14 OR CRB25
A27R302	0757-0442	9	1	RES 10K 1% .125W	00746	CRB14 OR CRB25
A27R304	0698-8799	9	1	RES 21.5K .1% .1	00746	CRB14 OR CRB25
A27R307	8159-0005	0	1	RES-ZERO OHMS	01339	L-2007-1
A27R308	0757-0442	9	1	RES 10K 1% .125W	00746	CRB14 OR CRB25
A27R309	0757-0449	6	1	RES 20K 1% .125W	00746	CRB14 OR CRB25
A27R310	0757-0449	6	1	RES 20K 1% .125W	00746	CRB14 OR CRB25
A27R311	0757-0449	6	1	RES 20K 1% .125W	00746	CRB14 OR CRB25
A27R312	0757-0449	6	1	RES 20K 1% .125W	00746	CRB14 OR CRB25
A27R313	0757-0449	6	1	RES 20K 1% .125W	00746	CRB14 OR CRB25
A27R314	0757-0442	9	1	RES 10K 1% .125W	00746	CRB14 OR CRB25
A27R315	0757-0449	6	1	RES 20K 1% .125W	00746	CRB14 OR CRB25
A27R316	8159-0005	0	1	RES-ZERO OHMS	01339	L-2007-1
A27R317	0757-0280	3	1	RES 1K 1% .125W	00746	CRB14 OR CRB25
A27R318	0757-0280	3	1	RES 1K 1% .125W	00746	CRB14 OR CRB25
A27R319	0757-0280	3	1	RES 1K 1% .125W	00746	CRB14 OR CRB25
A27R320	0757-0280	3	1	RES 1K 1% .125W	00746	CRB14 OR CRB25
A27R321	0757-0421	4	1	RES 825 1% .125W	00746	CRB14 OR CRB25
A27R322	0699-1056	9	1	RES 825 .1% .125	00746	CRB14 OR CRB25
A27R323	0757-0283	6	1	RES 2K 1% .125W	00746	CRB14 OR CRB25
A27R324	0757-0416	7	1	RES 511 1% .125W	00746	CRB14 OR CRB25
A27R325	0757-0421	4	1	RES 825 1% .125W	00746	CRB14 OR CRB25
A27R326	0699-1056	9	1	RES 825 .1% .125	00746	CRB14 OR CRB25
A27R327	0757-0416	7	1	RES 511 1% .125W	00746	CRB14 OR CRB25
A27R328	0757-0461	2	1	RES 68.1K 1% .12	00746	CRB14 OR CRB25

Table B-13. 8130A Option 020 Channel 2 Board Parts List (continued)

Reference	HP Part #	CD	Qty	Description	Manuf'r	Part #
A27R329	0698-8826	3	1	RES 825K 1% .125	00746	CRB14 OR CRB25
A27R330	0757-0409	8	1	RES 274 1% .125W	00746	CRB14 OR CRB25
A27R332	0757-0442	9	1	RES 10K 1% .125W	00746	CRB14 OR CRB25
A27R333	0698-3156	2	1	RES 14.7K 1% .12	00746	CRB14 OR CRB25
A27R334	0757-0409	8	1	RES 274 1% .125W	00746	CRB14 OR CRB25
A27R335	0757-0442	9	1	RES 10K 1% .125W	00746	CRB14 OR CRB25
A27R337	0757-0346	2	1	RES 10 1% .125W	00746	CRB14 OR CRB25
A27R338	0698-3156	2	1	RES 14.7K 1% .12	00746	CRB14 OR CRB25
A27R339	0698-3156	2	1	RES 14.7K 1% .12	00746	CRB14 OR CRB25
A27R340	0757-0283	6	1	RES 2K 1% .125W	00746	CRB14 OR CRB25
A27R341	0698-3156	2	1	RES 14.7K 1% .12	00746	CRB14 OR CRB25
A27R342	0757-0283	6	1	RES 2K 1% .125W	00746	CRB14 OR CRB25
A27R343	0699-2683	0	1	RES 274 .1% .125	00746	CRB14
A27R344	0699-2683	0	1	RES 274 .1% .125	00746	CRB14
A27R347	0757-0283	6	1	RES 2K 1% .125W	00746	CRB14 OR CRB25
A27R348	0757-0346	2	1	RES 10 1% .125W	00746	CRB14 OR CRB25
A27R351	8159-0005	0	1	RES-ZERO OHMS	01339	L-2007-1
A27R352	0757-0280	3	1	RES 1K 1% .125W	00746	CRB14 OR CRB25
A27R354	0698-6360	6	1	RES 10K .1% .125	00746	CRB14 OR CRB25
A27R355	0757-1094	9	1	RES 1.47K 1% .12	00746	CRB14 OR CRB25
A27R356	0757-1094	9	1	RES 1.47K 1% .12	00746	CRB14 OR CRB25
A27R357	0698-8827	4	1	RES 1M 1% .125W	00746	CRB14 OR CRB25
A27R358	0757-0401	0	1	RES 100 1% .125W	00746	CRB14 OR CRB25
A27R359	0757-0401	0	1	RES 100 1% .125W	00746	CRB14 OR CRB25
A27R360	0757-0442	9	1	RES 10K 1% .125W	00746	CRB14 OR CRB25
A27R361	0757-0442	9	1	RES 10K 1% .125W	00746	CRB14 OR CRB25
A27R362	0698-3279	0	1	RES 4.99K 1% .12	00746	CRB14 OR CRB25
A27R363	0757-0199	3	1	RES 21.5K 1% .12	00746	CRB14 OR CRB25
A27R364	0757-0199	3	1	RES 21.5K 1% .12	00746	CRB14 OR CRB25
A27R365	0698-8826	3	1	RES 825K 1% .125	00746	CRB14 OR CRB25

Table B-13. 8130A Option 020 Channel 2 Board Parts List (continued)

Reference	HP Part #	CD	Qty	Description	Manuf'r	Part #
A27R366	0757-0442	9	1	RES 10K 1% .125W	00746	CRB14 OR CRB25
A27R367	0757-0274	5	1	RES 1.21K 1% .12	00746	CRB14 OR CRB25
A27R368	0757-0442	9	1	RES 10K 1% .125W	00746	CRB14 OR CRB25
A27R369	0757-0442	9	1	RES 10K 1% .125W	00746	CRB14 OR CRB25
A27R370	0698-8958	2	1	RES 511K 1% .125	00746	CRB14 OR CRB25
A27R371	0698-8958	2	1	RES 511K 1% .125	00746	CRB14 OR CRB25
A27R372	0757-0442	9	1	RES 10K 1% .125W	00746	CRB14 OR CRB25
A27R373	0757-0442	9	1	RES 10K 1% .125W	00746	CRB14 OR CRB25
A27R374	0698-3153	9	1	RES 3.83K 1% .12	00746	CRB14 OR CRB25
A27R377	0698-3441	8	1	RES 215 1% .125W	00746	CRB14 OR CRB25
A27R378	0698-3457	6	1	RES 316K 1% .125	00746	CRB14 OR CRB25
A27R379	0757-0407	6	1	RES 200 1% .125W	00746	CRB14 OR CRB25
A27R400	0757-0428	1	1	RES 1.62K 1% .12	00746	CRB14 OR CRB25
A27R401	0757-0442	9	1	RES 10K 1% .125W	00746	CRB14 OR CRB25
A27R405	8159-0005	0	1	RES-ZERO OHMS	01339	L-2007-1
A27R406	0757-0283	6	1	RES 2K 1% .125W	00746	CRB14 OR CRB25
A27R407	0757-0283	6	1	RES 2K 1% .125W	00746	CRB14 OR CRB25
A27R408	0698-0085	0	1	RES 2.61K 1% .12	00746	CRB14 OR CRB25
A27R410	0698-0084	9	1	RES 2.15K 1% .12	00746	CRB14 OR CRB25
A27R412	0698-3432	7	1	RES 26.1 1% .125	00746	CRB14 OR CRB25
A27R413	0698-4445	4	1	RES 5.76K 1% .12	00746	CRB14 OR CRB25
A27R414	0757-0416	7	1	RES 511 1% .125W	00746	CRB14 OR CRB25
A27R416	0757-0442	9	1	RES 10K 1% .125W	00746	CRB14 OR CRB25
A27R419	0757-0283	6	1	RES 2K 1% .125W	00746	CRB14 OR CRB25
A27R420	0698-3519	1	1	RES 12.4K 1% .12	00746	CRB14 OR CRB25
A27R423	0698-3444	1	1	RES 316 1% .125W	00746	CRB14 OR CRB25
A27R424	0757-0416	7	1	RES 511 1% .125W	00746	CRB14 OR CRB25
A27R425	0757-0441	8	1	RES 8.25K 1% .12	00746	CRB14 OR CRB25
A27R426	0757-0441	8	1	RES 8.25K 1% .12	00746	CRB14 OR CRB25
A27R427	0757-0416	7	1	RES 511 1% .125W	00746	CRB14 OR CRB25

Table B-13. 8130A Option 020 Channel 2 Board Parts List (continued)

Reference	HP Part #	CD	Qty	Description	Manuf'r	Part #
A27R428	0698-3444	1	1	RES 316 1% .125W	00746	CRB14 OR CRB25
A27R429	0757-0280	3	1	RES 1K 1% .125W	00746	CRB14 OR CRB25
A27R430	0757-0280	3	1	RES 1K 1% .125W	00746	CRB14 OR CRB25
A27R431	0698-3444	1	1	RES 316 1% .125W	00746	CRB14 OR CRB25
A27R432	0757-0416	7	1	RES 511 1% .125W	00746	CRB14 OR CRB25
A27R433	0757-0411	2	1	RES 332 1% .125W	00746	CRB14 OR CRB25
A27R434	0757-0274	5	1	RES 1.21K 1% .12	00746	CRB14 OR CRB25
A27R435	0757-0280	3	1	RES 1K 1% .125W	00746	CRB14 OR CRB25
A27R436	0757-0280	3	1	RES 1K 1% .125W	00746	CRB14 OR CRB25
A27R437	0757-0274	5	1	RES 1.21K 1% .12	00746	CRB14 OR CRB25
A27R438	0698-3444	1	1	RES 316 1% .125W	00746	CRB14 OR CRB25
A27R439	0757-0416	7	1	RES 511 1% .125W	00746	CRB14 OR CRB25
A27R440	0757-0411	2	1	RES 332 1% .125W	00746	CRB14 OR CRB25
A27R441	8159-0005	0	1	RES-ZERO OHMS	01339	L-2007-1
A27R444	0757-0416	7	1	RES 511 1% .125W	00746	CRB14 OR CRB25
A27R445	0698-3443	0	1	RES 287 1% .125W	00746	CRB14 OR CRB25
A27R446	0757-0416	7	1	RES 511 1% .125W	00746	CRB14 OR CRB25
A27R447	0698-3443	0	1	RES 287 1% .125W	00746	CRB14 OR CRB25
A27R448	0757-0280	3	1	RES 1K 1% .125W	00746	CRB14 OR CRB25
A27R449	0757-0416	7	1	RES 511 1% .125W	00746	CRB14 OR CRB25
A27R450	0757-0291	6	1	RES 24.9 1% .125	00746	CRB14 OR CRB25
A27R451	0757-0291	6	1	RES 24.9 1% .125	00746	CRB14 OR CRB25
A27R452	0757-0291	6	1	RES 24.9 1% .125	00746	CRB14 OR CRB25
A27R453	0757-0279	0	1	RES 3.16K 1% .12	00746	CRB14 OR CRB25
A27R454	0698-4020	1	1	RES 9.53K 1% .12	00746	CRB14 OR CRB25
A27R455	0757-0416	7	1	RES 511 1% .125W	00746	CRB14 OR CRB25
A27R456	0757-0421	4	1	RES 825 1% .125W	00746	CRB14 OR CRB25
A27R457	0757-0416	7	1	RES 511 1% .125W	00746	CRB14 OR CRB25
A27R458	0757-0416	7	1	RES 511 1% .125W	00746	CRB14 OR CRB25
A27R459	0757-0416	7	1	RES 511 1% .125W	00746	CRB14 OR CRB25

Table B-13. 8130A Option 020 Channel 2 Board Parts List (continued)

Reference	HP Part #	CD	Qty	Description	Manuf'r	Part #
A27R460	0698-3153	9	1	RES 3.83K 1% .12	00746	CRB14 OR CRB25
A27R464	0698-3158	4	1	RES 23.7K 1% .12	00746	CRB14 OR CRB25
A27R465	0757-0442	9	1	RES 10K 1% .125W	00746	CRB14 OR CRB25
A27R466	0698-3444	1	1	RES 316 1% .125W	00746	CRB14 OR CRB25
A27R467	0757-0442	9	1	RES 10K 1% .125W	00746	CRB14 OR CRB25
A27R468	0757-0418	9	1	RES 619 1% .125W	00746	CRB14 OR CRB25
A27R469	0698-3444	1	1	RES 316 1% .125W	00746	CRB14 OR CRB25
A27R470	0698-3444	1	1	RES 316 1% .125W	00746	CRB14 OR CRB25
A27R471	0698-3444	1	1	RES 316 1% .125W	00746	CRB14 OR CRB25
A27R472	0698-6323	1	1	RES 100 .1% .125	00746	CRB14 OR CRB25
A27R473	0698-6323	1	1	RES 100 .1% .125	00746	CRB14 OR CRB25
A27R474	0698-6323	1	1	RES 100 .1% .125	00746	CRB14 OR CRB25
A27R475	0698-6323	1	1	RES 100 .1% .125	00746	CRB14 OR CRB25
A27R476	0698-6323	1	1	RES 100 .1% .125	00746	CRB14 OR CRB25
A27R477	0698-6323	1	1	RES 100 .1% .125	00746	CRB14 OR CRB25
A27R478	0698-6323	1	1	RES 100 .1% .125	00746	CRB14 OR CRB25
A27R479	0698-3444	1	1	RES 316 1% .125W	00746	CRB14 OR CRB25
A27R480	0757-0279	0	1	RES 3.16K 1% .12	00746	CRB14 OR CRB25
A27R481	0698-3268	7	1	RES 11.5K 1% .12	00746	CRB14 OR CRB25
A27R482	0698-3444	1	1	RES 316 1% .125W	00746	CRB14 OR CRB25
A27R483	0698-3444	1	1	RES 316 1% .125W	00746	CRB14 OR CRB25
A27R485	0757-0280	3	1	RES 1K 1% .125W	00746	CRB14 OR CRB25
A27R486	0757-0279	0	1	RES 3.16K 1% .12	00746	CRB14 OR CRB25
A27R487	0757-0278	9	1	RES 1.78K 1% .12	00746	CRB14 OR CRB25
A27R488	0698-3446	3	1	RES 383 1% .125W	00746	CRB14 OR CRB25
A27R489	0698-4460	3	1	RES 649 1% .125W	00746	CRB14 OR CRB25
A27R490	0757-0317	7	1	RES 1.33K 1% .12	00746	CRB14 OR CRB25
A27R491	0757-0416	7	1	RES 511 1% .125W	00746	CRB14 OR CRB25
A27R492	0757-0416	7	1	RES 511 1% .125W	00746	CRB14 OR CRB25
A27R493	0698-3446	3	1	RES 383 1% .125W	00746	CRB14 OR CRB25

Table B-13. 8130A Option 020 Channel 2 Board Parts List (continued)

Reference	HP Part #	CD	Qty	Description	Manuf'r	Part #
A27R494	0757-1094	9	1	RES 1.47K 1% .12	00746	CRB14 OR CRB25
A27R497	0757-0274	5	1	RES 1.21K 1% .12	00746	CRB14 OR CRB25
A27R498	0757-0442	9	1	RES 10K 1% .125W	00746	CRB14 OR CRB25
A27R900	0698-3136	8	1	RES 17.8K 1% .12	00746	CRB14 OR CRB25
A27R901	0698-0084	9	1	RES 2.15K 1% .12	00746	CRB14 OR CRB25
A27R902	0757-0442	9	1	RES 10K 1% .125W	00746	CRB14 OR CRB25
A27R903	0757-0442	9	1	RES 10K 1% .125W	00746	CRB14 OR CRB25
A27R905	0698-3446	3	1	RES 383 1% .125W	00746	CRB14 OR CRB25
A27R906	0757-0421	4	1	RES 825 1% .125W	00746	CRB14 OR CRB25
A27R907	0757-0444	1	1	RES 12.1K 1% .12	00746	CRB14 OR CRB25
A27R908	0757-0280	3	1	RES 1K 1% .125W	00746	CRB14 OR CRB25
A27R909	0757-0442	9	1	RES 10K 1% .125W	00746	CRB14 OR CRB25
A27R910	0698-6624	5	1	RES 2K .1% .125W	00746	CRB14 OR CRB25
A27R911	0698-6624	5	1	RES 2K .1% .125W	00746	CRB14 OR CRB25
A27R912	0757-0442	9	1	RES 10K 1% .125W	00746	CRB14 OR CRB25
A27R913	0757-0442	9	1	RES 10K 1% .125W	00746	CRB14 OR CRB25
A27R914	0698-0084	9	1	RES 2.15K 1% .12	00746	CRB14 OR CRB25
A27R915	0699-2684	1	1	RES 332 .1% .125	00746	CRB14
A27R916	0757-0442	9	1	RES 10K 1% .125W	00746	CRB14 OR CRB25
A27R917	0757-0442	9	1	RES 10K 1% .125W	00746	CRB14 OR CRB25
A27R918	0698-0085	0	1	RES 2.61K 1% .12	00746	CRB14 OR CRB25
A27R919	0757-0280	3	1	RES 1K 1% .125W	00746	CRB14 OR CRB25
A27R920	0757-0346	2	1	RES 10 1% .125W	00746	CRB14 OR CRB25
A27R921	0757-0715	9	1	RES 150 1% .25W	01074	H4
A27R922	0757-0438	3	1	RES 5.11K 1% .12	00746	CRB14 OR CRB25
A27R924	0757-0442	9	1	RES 10K 1% .125W	00746	CRB14 OR CRB25
A27R925	0757-0280	3	1	RES 1K 1% .125W	00746	CRB14 OR CRB25
A27R926	0698-0085	0	1	RES 2.61K 1% .12	00746	CRB14 OR CRB25
A27R927	0757-0280	3	1	RES 1K 1% .125W	00746	CRB14 OR CRB25
A27R928	0757-0280	3	1	RES 1K 1% .125W	00746	CRB14 OR CRB25

Table B-13. 8130A Option 020 Channel 2 Board Parts List (continued)

Reference	HP Part #	CD	Qty	Description	Manuf'r	Part #
A27R929	0757-0442	9	1	RES 10K 1% .125W	00746	CRB14 OR CRB25
A27R930	0698-3435	0	1	RES 38.3 1% .125	00746	CRB14 OR CRB25
A27R931	0699-2731	9	1	RES 442 .1% .125	06118	MK2
A27R934	0757-0449	6	1	RES 20K 1% .125W	00746	CRB14 OR CRB25
A27R935	0757-0279	0	1	RES 3.16K 1% .12	00746	CRB14 OR CRB25
A27R936	0698-3243	8	1	RES 178K 1% .125	00746	CRB14 OR CRB25
A27R937	0757-0460	1	1	RES 61.9K 1% .12	00746	CRB14 OR CRB25
A27R939	0698-4477	2	1	RES 10.5K 1% .12	00746	CRB14 OR CRB25
A27R940	0757-0442	9	1	RES 10K 1% .125W	00746	CRB14 OR CRB25
A27R941	0757-0439	4	1	RES 6.81K 1% .12	00746	CRB14 OR CRB25
A27R942	0757-0416	7	1	RES 511 1% .125W	00746	CRB14 OR CRB25
A27R943	0698-3444	1	1	RES 316 1% .125W	00746	CRB14 OR CRB25
A27R944	0698-4445	4	1	RES 5.76K 1% .12	00746	CRB14 OR CRB25
A27R945	0698-3444	1	1	RES 316 1% .125W	00746	CRB14 OR CRB25
A27R946	0757-0438	3	1	RES 5.11K 1% .12	00746	CRB14 OR CRB25
A27R947	0757-0441	8	1	RES 8.25K 1% .12	00746	CRB14 OR CRB25
A27R948	0698-3444	1	1	RES 316 1% .125W	00746	CRB14 OR CRB25
A27R949	0698-0084	9	1	RES 2.15K 1% .12	00746	CRB14 OR CRB25
A27R950	0757-0283	6	1	RES 2K 1% .125W	00746	CRB14 OR CRB25
A27R951	0698-0085	0	1	RES 2.61K 1% .12	00746	CRB14 OR CRB25
A27R952	0757-0442	9	1	RES 10K 1% .125W	00746	CRB14 OR CRB25
A27R953	0698-0085	0	1	RES 2.61K 1% .12	00746	CRB14 OR CRB25
A27R954	0698-0085	0	1	RES 2.61K 1% .12	00746	CRB14 OR CRB25
A27R955	0757-0442	9	1	RES 10K 1% .125W	00746	CRB14 OR CRB25
A27R956	0757-1094	9	1	RES 1.47K 1% .12	00746	CRB14 OR CRB25
A27R957	0757-0416	7	1	RES 511 1% .125W	00746	CRB14 OR CRB25
A27R958	0698-3439	4	1	RES 178 1% .125W	00746	CRB14 OR CRB25
A27R959	0757-0416	7	1	RES 511 1% .125W	00746	CRB14 OR CRB25
A27R960	0757-0280	3	1	RES 1K 1% .125W	00746	CRB14 OR CRB25
A27R961	0757-0442	9	1	RES 10K 1% .125W	00746	CRB14 OR CRB25

Table B-13. 8130A Option 020 Channel 2 Board Parts List (continued)

Reference	HP Part #	CD	Qty	Description	Manuf'r	Part #
A27R962	0757-0449	6	1	RES 20K 1% .125W	00746	CRB14 OR CRB25
A27R963	0698-3155	1	1	RES 4.64K 1% .12	00746	CRB14 OR CRB25
A27R964	0757-0280	3	1	RES 1K 1% .125W	00746	CRB14 OR CRB25
A27RA100	1810-0280	8	1	NETWORK-RES SIP	02483	750-101
A27RA300	1810-0691	5	1	NETWORK-RES DIP	01607	F16B103B
A27RA400	1810-0316	1	1	NETWORK-RES DIP	02483	761-3-R10K
A27RV1	2100-3345	8	1	RES-TRMR 10 10%	03744	3386P-Y46-100
A27RV100	2100-3211	7	1	RES-TRMR 1K 10%	03744	3386P-Y46-102
A27RV200	2100-0554	5	1	RES-TRMR 500 10%	03744	3386P-Y46-501
A27RV303	2100-3212	8	1	RES-TRMR 200'10%	03744	3386P-Y46-201
A27RV305	2100-3253	7	1	RES-TRMR 50K 10%	03744	3386P-Y46-503
A27RV306	2100-3253	7	1	RES-TRMR 50K 10%	03744	3386P-Y46-503
A27RV307	2100-3210	6	1	RES-TRMR 10K 10%	03744	3386P-Y46-103
A27RV308	2100-3409	5	1	RES-TRMR 20 10%	03744	3386P-Y46-200
A27RV309	2100-3409	5	1	RES-TRMR 20 10%	03744	3386P-Y46-200
A27RV401	2100-0554	5	1	RES-TRMR 500 10%	03744	3386P-Y46-501
A27RV402	2100-3252	6	1	RES-TRMR 5K 10%	03744	3386P-Y46-502
A27TP100	0360-2264	6	1	TERM.-TEST POINT	10358	1095D
A27TP101	0360-2264	6	1	TERM.-TEST POINT	10358	1095D
A27TP102	0360-2264	6	1	TERM.-TEST POINT	10358	1095D
A27TP103	0360-2264	6	1	TERM.-TEST POINT	10358	1095D
A27TP104	0360-2264	6	1	TERM.-TEST POINT	10358	1095D
A27TP105	0360-2264	6	1	TERM.-TEST POINT	10358	1095D
A27TP106	0360-2264	6	1	TERM.-TEST POINT	10358	1095D
A27TP108	0360-2264	6	1	TERM.-TEST POINT	10358	1095D
A27TP109	0360-2264	6	1	TERM.-TEST POINT	10358	1095D
A27TP110	0360-2264	6	1	TERM.-TEST POINT	10358	1095D
A27TP111	0360-2264	6	1	TERM.-TEST POINT	10358	1095D
A27TP112	0360-2264	6	1	TERM.-TEST POINT	10358	1095D
A27TP200	0360-2264	6	1	TERM.-TEST POINT	10358	1095D

Table B-13. 8130A Option 020 Channel 2 Board Parts List (continued)

Reference	HP Part #	CD	Qty	Description	Manuf'r	Part #
A27TP201	0360-2264	6	1	TERM.-TEST POINT	10358	1095D
A27TP202	0360-2264	6	1	TERM.-TEST POINT	10358	1095D
A27TP300	0360-2264	6	1	TERM.-TEST POINT	10358	1095D
A27TP301	0360-2264	6	1	TERM.-TEST POINT	10358	1095D
A27TP401	0360-2264	6	1	TERM.-TEST POINT	10358	1095D
A27TP402	0360-2264	6	1	TERM.-TEST POINT	10358	1095D
A27U1	1NB7-8201	6	1		28480	1NB7-8201
A27U2	1820-2111	9	1	IC-INTERFACE	01698	SN75468N
A27U100	1820-3665	0	1	IC-MM74HCT245N	01698	SN74HCT245N
A27U101	1820-3847	0	1	IC-MM74HCT138N	01698	SN74HCT138N
A27U102	1820-3847	0	1	IC-MM74HCT138N	01698	SN74HCT138N
A27U103	1820-3082	5	1	IC-MC74HC374N	01698	SN74HC374N
A27U104	1818-3164	9	1	IC X2816BP	10572	X2816BP
A27U105	1820-3082	5	1	IC-MC74HC374N	01698	SN74HC374N
A27U106	1826-0409	6	1	IC MC1723L	02037	MC1723L
A27U107	1826-1869	4	1	D/A 12-BIT	03285	AD7537JN
A27U108	1826-0161	7	1	IC 324	02037	LM324N
A27U110	1820-3082	5	1	IC-MC74HC374N	01698	SN74HC374N
A27U150	1820-3373	7	1	IC-MM74HC221AN	03406	MM74HC221AN
A27U151	1820-3298	5	1	IC-MM74HC32N	02037	MC74HC32N
A27U152	1820-2924	2	1	IC-MC74HC02N	01698	SN74HC02N
A27U153	1820-3081	4	1	IC-MC74HC74N	01698	SN74HC74N
A27U154	1820-3081	4	1	IC-MC74HC74N	01698	SN74HC74N
A27U155	1820-3097	2	1	IC-MM74HC08N	02037	MC74HC08N
A27U156	1826-0600	9	1	IC 074A	01698	TL074ACN
A27U157	1826-0138	8	1	IC 339	01698	LM339N
A27U158	1858-0053	3	1	XSTR ARY 14P-DIP	02037	
A27U159	1858-0058	8	1	XSTR ARY 14P-DIP	02037	MPQ3906
A27U160	1820-3082	5	1	IC-MC74HC374N	01698	SN74HC374N
A27U161	1820-1315	3	1	ANLG MUXR MC1405	02037	MC14051BCP

Table B-13. 8130A Option 020 Channel 2 Board Parts List (continued)

Reference	HP Part #	CD	Qty	Description	Manuf'r	Part #
A27U162	1826-0877	2	1	A/D 8-BIT	03285	AD7574KN
A27U163	1826-0161	7	1	IC 324	02037	LM324N
A27U164	1826-0161	7	1	IC 324	02037	LM324N
A27U165	1826-0139	9	1	IC 1458	02037	MC1458P1
A27U200	1826-1869	4	1	D/A 12-BIT	03285	AD7537JN
A27U201	1826-1553	3	1	IC 1014	10858	LT1014DN
A27U202	1826-1553	3	1	IC 1014	10858	LT1014DN
A27U203	1826-0501	9	1	ANLG MUXR MC1405	02037	MC14053BCP
A27U204	1826-0501	9	1	ANLG MUXR MC1405	02037	MC14053BCP
A27U300	1826-1553	3	1	IC 1014	10858	LT1014DN
A27U301	1826-1553	3	1	IC 1014	10858	LT1014DN
A27U302	1826-1553	3	1	IC 1014	10858	LT1014DN
A27U303	1826-0315	3	1	IC 348	03406	LM348N
A27U305	1826-1409	8	1	IC 1013	10858	LT1013CN8
A27U306	1826-0139	9	1	IC 1458	02037	MC1458P1
A27U400	1826-0161	7	1	IC 324	02037	LM324N
A27U401	1826-0161	7	1	IC 324	02037	LM324N
A27U402	1826-0161	7	1	IC 324	02037	LM324N
A27U403	1826-0161	7	1	IC 324	02037	LM324N
A27U404	1826-0161	7	1	IC 324	02037	LM324N
A27U405	1826-0501	9	1	ANLG MUXR MC1405	02037	MC14053BCP
A27U900	1826-1617	0	1	ANLG MUXR DG509A	02883	DG509ABK
A27U901	1858-0058	8	1	XSTR ARY 14P-DIP	02037	MPQ3906
A27U902	1858-0021	5	1	XSTR ARY 16P-DIP	03799	CA3083
A27U903	1826-0161	7	1	IC 324	02037	LM324N
A27U904	1826-0161	7	1	IC 324	02037	LM324N
A27VR1	1902-0953	7	1	DIO-ZNR 6.2V 5%	02037	SZ30035-11RL
A27VR2	1902-0953	7	1	DIO-ZNR 6.2V 5%	02037	SZ30035-11RL
A27VR3	1902-0944	6	1	DIO-ZNR 2.7V 5%	02037	
A27VR101	1902-0951	5	1	DIO-ZNR 5.1V 5%	02037	SZ30035-9RL

Table B-13. 8130A Option 020 Channel 2 Board Parts List (continued)

Reference	HP Part #	CD	Qty	Description	Manuf'r	Part #
A27VR150	1902-0950	4	1	DIO-ZNR 4.7V 5%	02037	
A27VR151	1902-0950	4	1	DIO-ZNR 4.7V 5%	02037	
A27VR152	1902-0956	0	1	DIO-ZNR 8.2V 5%	02037	
A27VR200	1902-0944	6	1	DIO-ZNR 2.7V 5%	02037	
A27VR300	1902-0943	5	1	DIO-ZNR 2.4V 5%	02037	
A27VR301	1902-0943	5	1	DIO-ZNR 2.4V 5%	02037	
A27VR400	1902-0951	5	1	DIO-ZNR 5.1V 5%	02037	SZ30035-9RL
A27VR401	1902-0951	5	1	DIO-ZNR 5.1V 5%	02037	SZ30035-9RL
A27VR402	1902-0954	8	1	DIO-ZNR 6.8V 5%	02037	
A27VR403	1902-0935	5	1	DIO-ZNR 9.1V 5%	02037	
A27VR404	1902-0951	5	1	DIO-ZNR 5.1V 5%	02037	SZ30035-9RL
A27VR405	1902-0943	5	1	DIO-ZNR 2.4V 5%	02037	
A27VR900	1902-0962	8	1	DIO-ZNR 15V 5%	02037	
A27VR903	1902-0956	0	1	DIO-ZNR 8.2V 5%	02037	
A27VR904	1902-0956	0	1	DIO-ZNR 8.2V 5%	02037	
A27VR905	1902-0951	5	1	DIO-ZNR 5.1V 5%	02037	SZ30035-9RL
A27VR907	1902-0951	5	1	DIO-ZNR 5.1V 5%	02037	SZ30035-9RL
A27VR908	1902-0958	2	1	DIO-ZNR 10V 5%	02037	
A27VR909	1902-0945	7	1	DIO-ZNR 3V 5%	02037	SZ0035-3RL
A27VR914	1902-1378	2	1	DIO-ZNR 3.6V 5%	02037	
A27W100	1258-0141	8	1	JUMPER-REM	01380	530153-2
A27W101	1258-0141	8	1	JUMPER-REM	01380	530153-2
A27W300	1258-0141	8	1	JUMPER-REM	01380	530153-2

C

HP 8131A Parts Lists

Introduction

The parts lists are divided into two groups:

1. A parts list for the standard instrument, followed by a parts lists for each of the electrical assemblies within it.
2. A parts list for the dual-channel instrument (Option 020) listing the additional/alternative parts fitted, followed by a parts list for each of the additional/alternative electrical assemblies.

The parts in each list are listed by reference designator.

Reference Designators

Reference designators are alphanumeric names for parts. Examples are given below.

1. A1 = electrical assembly number 1
2. MP1 = mechanical part number 1
3. A5R9 = resistor 9 on assembly 5

Parts Information

The following information is provided for each part in the parts list table:

1. Reference Designator
2. HP Part Number
3. CD = Check Digit
4. Description
5. Manufacturer's reference number.Table C-1 lists the manufacturers' names against their reference numbers.
6. Manufacturer's part number

Ordering Information

Parts are ordered from the nearest Hewlett-Packard Sales and Support Office.

A Sales and Support Office Directory is provided in Appendix A of this manual.

1. Provide the following information when ordering parts listed in the parts table.

   a. Reference Designator
   b. Hewlett-Packard part number
   c. Check Digit
   d. Quantity required.

2. Provide the following information when ordering parts not listed in the parts table.

   a. Instrument model number
   b. Instrument serial number
   c. A physical description of the part
   d. A functional description of the part
   e. Quantity required.

Table C-1. HP 8131A Parts Manufacturers

Reference	Name
00039	NEC ELECTRONICS INC
00075	ARIZONA COIL INC
00359	O'HARA METAL PRODUCTS CO
00493	UNITED CHEMI-CON INC
00746	ROHM CORP
01074	HOLSWORTHY ELECTRONICS LTD
01075	ITT POMONA ELECTRONICS
01125	LEWIS SCREW CO
01339	GETTIG ENGRG & MFG CO INC
01380	AMP INC
01417	NEL FREQUENCY CONTROLS INC
01542	HP DIV 01 SAN JOSE COMPONENTS
01607	ALLEN-BRADLEY CO INC
01698	TEXAS INSTRUMENTS INC
01808	SMALL PARTS INC
02010	AVX CORP
02037	MOTOROLA INC
02062	HP DIV 05 MSD
02121	LYN-TRON INC
02145	RAYCHEM CORP
02170	AMATOM ELEK HARDWARE DIV OF MITE
02414	BURNDY CORP
02419	CELLOTAPE INC
02483	CTS CORP
02499	IRC INC
02531	CHICAGO RIVET & MACHINE CO
02556	MONTROSE PRODUCTS CO
02574	RLC ELECTRONICS INS
02608	THERMALLOY INC
02738	METRIC & MULTISTANDARD CMPNT CORP
02805	COOPER INDUSTRIES INC
02883	SILICONIX INC
02910	SIGNETICS CORP
02946	DUPONT E I DE NEMOURS & CO
02995	NORTH AMERICAN PHILIPS CORP

Reference	Name
03000	AVDEL DIV OF NEWMAN IND LTD
03038	INTL RECTIFIER CORP
03232	PRODUCT COMPONENT CORP
03273	GOWANDA ELECTRONICS CORP
03285	ANALOG DEVICES INC
03394	METHODE ELECTRONICS INC
03406	NATIONAL SEMICONDUCTOR CORP
03418	MOLEX INC
03647	INSTRUMENT SPECIALTIES CO INC
03744	BOURNS INC
03799	HARRIS CORP
03811	INTEL CORP
03981	PENN ENGINEERING & MFG CORP
04129	ARIES ELECTRONICS INC
04200	SPRAGUE ELECTRIC CO
04213	STIMPSON EDWIN B CO INC
04225	THOMAS & BETTS CORP
04486	ITT CORP
04604	FEDERAL SCREW PRODUCTS CO
04703	LITTELFUSE INC
04726	3M CO
04775	NATIONAL LOCK WASHER CO
04880	ZIERICK MFG CO
04939	SCHNITZER ALLOY PRODUCTS CO
05098	VICTORY ENGINEERING CORP
05313	SEASTROM MFG CO
05447	BERGQUIST CO
05524	DALE ELECTRONICS INC
05610	CAMCAR SCREW & MFG CO
05769	ITT SEALECTRO CORP
05879	AMPHENOL CORPORATION
05947	ASSMANN F W UND SOEHNE
06113	HIPP ESSLINGEN
06121	SIEMENS AG
06313	WOELCO

Table C-1. HP 8131A Parts Manufacturers (continued)

Reference	Name
06352	TDK CORPORATION OF AMERICA
06354	TOSHIBA CORP
06653	KLAR
06691	HOUSE OF METRICS LTD
07029	R BLESSING
08623	WOLFLE & CO
08709	PANASONIC INDUSTRIAL CO
09809	MATSUSHITA ELECTRIC WORKS LTD
09922	SHIN-ETSU POLYMER CO LTD
10358	VOGT AG

Reference	Name
10572	XICOR, INC
10803	ADVANCED INTERCONNECT
10858	LINEAR TECHNOLOGY CORP
11040	PRECISION PLASTICS & GRAPHICS
11192	HEYCO MOLDED PRODUCTS GMBH
11808	KITAGAWA INDUSTRIES CO LTD
12236	PACK & LOEDE GMBH
28480	HEWLETT PACKARD COMPANY

Master List

Table C-2. 8131A Standard Instrument Parts List

Reference	HP Part #	CD	Qty	Description	Manuf'r	Part #
A0 A1	08131-66501	4	1	BD AY KEY STD	28480	08131-66501
A0 A2	08131-66502	5	1	BD AY MOTHER	28480	08131-66502
A0 A3	08131-66503	6	1	BD AY UPCR	28480	08131-66503
A0 A4	08131-66504	7	1	BD AY PWR CTL	28480	08131-66504
A0 A5	08131-66505	8	1	BD AY TIMING STD	28480	08131-66505
A0 A14	08131-66514	9	1	BD AY PWR MAIN	28480	08131-66514
A0 A26	08131-66526	3	1	BD AY CHAN 1	28480	08131-66526
A0 F1	2110-0304	4	1	FUSE 1.5A 250V	02805	MDX-1-1/2A
A0 F1	2110-0029	0	1	FUSE 3A 250V	02805	
A0 MP1	08131-00101	2	1	CHASSIS MAIN	28480	08131-00101
A0 MP2	08131-00111	4	1	ANGLE PWR	28480	08131-00111
A0 MP3	08131-00202	4	1	SUB PANEL	28480	08131-00202
A0 MP4	08130-00203	4	1	REAR PANEL	28480	08130-00203
A0 MP5	08131-01212	8	1	BRKT FAN	28480	08131-01212
A0 MP6	08130-04101	9	1	CVR TOP CARD CAGE	28480	08130-04101
A0 MP7	08131-04102	1	1	CVR TOP CABINET	28480	08131-04102
A0 MP8	08131-04103	2	1	CVR TOP INSTRUMEN	28480	08131-04103
A0 MP9	08131-04107	6	2	BOARD KEEPER	28480	08131-04107
A0 MP10	08131-04501	4	1	CARD CAGE	28480	08131-04501
A0 MP11	08131-05402	6	1	INSULATOR BOTTOM	28480	08131-05402
A0 MP12	08131-21701	2	4	SMA-BUSHING	28480	08131-21701
A0 MP13	08131-40204	0	1	FRONT PANEL STD	28480	08131-40204
A0 MP14	08131-60110	9	1	CAGE AY PWR	28480	08131-60110
A0 MP15	08131-68502	8	1	FAN AY	28480	08131-68502
A0 MP16	08180-47401	2	1	KEY CAP	28480	08180-47401
A0 MP18	1401-0202	7	4	CAP-PROT STR	11040	.234-5
A0 MP19	1460-1345	5	2	TILT STAND	00359	
A0 MP20	5001-0539	9	2	SIDE TRIM	28480	5001-0539
A0 MP21	5021-5804	3	1	FRAME REAR 132	28480	5021-5804
A0 MP22	5021-5837	2	4	STRUT CRNR 497	28480	5021-5837
A0 MP23	5021-8403	4	1	FRAME FRNT 132	28480	5021-8403
A0 MP24	5040-0478	7	2	SLEEVE BLUE	28480	5040-0478

Table C-2. 8131A Standard Instrument Parts List (continued)

Reference	HP Part #	CD	Qty	Description	Manuf'r	Part #
A0 MP25	5040-9319	3	1	SHAFT PWR SWIT	28480	5040-9319
A0 MP26	5041-8801	8	4	FOOT	28480	5041-8801
A0 MP27	5041-8802	9	1	TRIM STRIP TOP	28480	5041-8802
A0 MP28	5041-8819	8	1	STP HNDL FRNT	28480	5041-8819
A0 MP29	5041-8820	1	1	STP HNDL REAR	28480	5041-8820
A0 MP30	5041-8821	2	4	FOOT REAR	28480	5041-8821
A0 MP31	5062-3704	4	1	STRAP HNDL 497	28480	5062-3704
A0 MP32	5062-3747	5	1	CVR BOTTOM 497	28480	5062-3747
A0 MP33	5062-3812	5	1	COVER SIDE PERF	28480	5062-3812
A0 MP34	5062-3837	4	1	COVER SIDE PERF	28480	5062-3837
A0 MP35	6960-0006	8	6	PLUG-HOLE	04213	D-2587-LCS
A0 MP36	7120-6153	9	1	LABEL-WARNING	06653	
A0 MP37	0363-0125	0	2	RFI STRP-FINGERS	03647	97-555
A0 MP38	0363-0170	5	1	RFI STRP-FINGERS	03647	97-520-A
A0 MP39	8160-0392	1	1	RFI STRP-FINGERS	03647	97-500-SNPB
A0 MP100	08131-00602	8	1	SHIELD	28480	08131-00602
A0 MP210	08131-21104	9	1	H-SINK	28480	08131-21104
A0 MP214	0340-0433	5	1	INSUL-FLG-BSHG	03232	
A0 MP215	0340-1212	0	1	INSULATOR	28480	0340-1212
A0 S1	3101-2992	2	1	SW 4A/80A 250V	04486	
A0 T1	9100-4739	3	1	XFMR BV382149B	28480	9100-4739
A0 W1	5180-2462	9	1	CBL HP-IB	28480	5180-2462
A0 W4	08131-61604	8	1	CBL AY TRIG INP	28480	08131-61604
A0 W5	08131-61605	9	1	CBL AY EXT INP	28480	08131-61605
A0 W6	08131-61651	5	1	CBL AY TRIG OUT	28480	08131-61651
A0 W10	08131-61603	7	1	CBL AY OUTPUT	28480	08131-61603
A0 W11	08131-61603	7	1	CBL AY OUTPUT	28480	08131-61603

Keyboard

Table C-3. 8131A Standard Keyboard Parts List

Reference	HP Part #	CD	Qty	Description	Manuf'r	Part #
A1	08131-66501	4	1	BD AY KEY STD	28480	08131-66501
A1 C2	0160-6623	5	1	CAP 0.1uF 50 V	02010	SA115C104MAAH
A1 C3	0160-6623	5	1	CAP 0.1uF 50 V	02010	SA115C104MAAH
A1 C4	0160-6623	5	1	CAP 0.1uF 50 V	02010	SA115C104MAAH
A1 CP1	0180-2207	5	1	CAP 100uF 10 V	04200	150D107X9010R2-DYS
A1 DS1	1990-1253	7	1	DISPLAY-NUM-SEG	01542	HDSP-H101
A1 DS2	1990-1253	7	1	DISPLAY-NUM-SEG	01542	HDSP-H101
A1 DS3	1990-1253	7	1	DISPLAY-NUM-SEG	01542	HDSP-H101
A1 DS4	1990-1253	7	1	DISPLAY-NUM-SEG	01542	HDSP-H101
A1 DS5	1990-1252	6	1	LED-LT BAR	01542	HLCP-B100
A1 DS6	1990-1278	6	1	LED-LMP	01542	HLMP-K155
A1 DS7	1990-1278	6	1	LED-LMP	01542	HLMP-K155
A1 DS8	1990-1254	8	1	LED-LMP	01542	HLMP-Q150 SELECTED
A1 DS11	1990-1254	8	1	LED-LMP	01542	HLMP-Q150 SELECTED
A1 DS12	1990-1254	8	1	LED-LMP	01542	HLMP-Q150 SELECTED
A1 DS13	1990-1254	8	1	LED-LMP	01542	HLMP-Q150 SELECTED
A1 DS14	1990-1254	8	1	LED-LMP	01542	HLMP-Q150 SELECTED
A1 DS15	1990-1254	8	1	LED-LMP	01542	HLMP-Q150 SELECTED
A1 DS16	1990-1254	8	1	LED-LMP	01542	HLMP-Q150 SELECTED
A1 DS17	1990-1254	8	1	LED-LMP	01542	HLMP-Q150 SELECTED
A1 DS18	1990-1254	8	1	LED-LMP	01542	HLMP-Q150 SELECTED
A1 DS21	1990-1278	6	1	LED-LMP	01542	HLMP-K155
A1 DS22	1990-1278	6	1	LED-LMP	01542	HLMP-K155
A1 DS23	1990-1278	6	1	LED-LMP	01542	HLMP-K155
A1 DS24	1990-1278	6	1	LED-LMP	01542	HLMP-K155
A1 DS25	1990-1278	6	1	LED-LMP	01542	HLMP-K155
A1 DS26	1990-1278	6	1	LED-LMP	01542	HLMP-K155

Table C-3. 8131A Standard Keyboard Parts List (continued)

Reference	HP Part #	CD	Qty	Description	Manuf'r	Part #
A1 DS27	1990-1278	6	1	LED-LMP	01542	HLMP-K155
A1 DS28	1990-1278	6	1	LED-LMP	01542	HLMP-K155
A1 DS51	1990-1278	6	1	LED-LMP	01542	HLMP-K155
A1 DS52	1990-1278	6	1	LED-LMP	01542	HLMP-K155
A1 DS53	1990-1278	6	1	LED-LMP	01542	HLMP-K155
A1 DS54	1990-1278	6	1	LED-LMP	01542	HLMP-K155
A1 DS55	1990-1278	6	1	LED-LMP	01542	HLMP-K155
A1 DS56	1990-1278	6	1	LED-LMP	01542	HLMP-K155
A1 DS57	1990-1278	6	1	LED-LMP	01542	HLMP-K155
A1 DS61	1990-1254	8	1	LED-LMP	01542	HLMP-Q150 SELECTED
A1 DS62	1990-1254	8	1	LED-LMP	01542	HLMP-Q150 SELECTED
A1 DS63	1990-1254	8	1	LED-LMP	01542	HLMP-Q150 SELECTED
A1 DS64	1990-1254	8	1	LED-LMP	01542	HLMP-Q150 SELECTED
A1 DS65	1990-1278	6	1	LED-LMP	01542	HLMP-K155
A1 DS71	1990-1278	6	1	LED-LMP	01542	HLMP-K155
A1 DS72	1990-1278	6	1	LED-LMP	01542	HLMP-K155
A1 DS73	1990-1278	6	1	LED-LMP	01542	HLMP-K155
A1 DS74	1990-1278	6	1	LED-LMP	01542	HLMP-K155
A1 DS75	1990-1278	6	1	LED-LMP	01542	HLMP-K155
A1 DS76	1990-1278	6	1	LED-LMP	01542	HLMP-K155
A1 DS77	1990-1278	6	1	LED-LMP	01542	HLMP-K155
A1 J1	1252-0217	7	1	CONN-POST-TP-HDR	04726	3429-5202
A1 MP1	5041-4707	5	8	QTR COBLK	28480	5041-4707
A1 MP2	5041-0318	6	3	LK CAP PTY GRAY	28480	5041-0318
A1 MP3	5041-0309	5	5	CAP KEY QUARTER	28480	5041-0309
A1 MP4	5041-0507	5	1	QTR WGRN	28480	5041-0507
A1 MP5	5041-0726	0	1	KEY CAP LCL	28480	5041-0726
A1 MP6	1200-0654	7	1	SKT-IC 40-CONT	01380	2-641606-1
A1 MP7	1200-0899	2	1	SKT-STRP 8-CONT	04129	8-0511-10
A1 RA1	1810-0325	2	1	NETWORK-RES DIP	02483	761-3-R150

Table C-3. 8131A Standard Keyboard Parts List (continued)

Reference	HP Part #	CD	Qty	Description	Manuf'r	Part #
A1 RA2	1810-0338	7	1	NETWORK-RES DIP	02483	761-3-R100
A1 RA3	1810-0338	7	1	NETWORK-RES DIP	02483	761-3-R100
A1 RA4	1810-0275	1	1	NETWORK-RES SIP	02483	750-101
A1 RA5	1810-0275	1	1	NETWORK-RES SIP	02483	750-101
A1 S1	5060-9436	7	1	SW-PB SPST NO	04486	5560-9436
A1 S2	5060-9436	7	1	SW-PB SPST NO	04486	5560-9436
A1 S3	5060-9436	7	1	SW-PB SPST NO	04486	5560-9436
A1 S4	5060-9436	7	1	SW-PB SPST NO	04486	5560-9436
A1 S5	5060-9436	7	1	SW-PB SPST NO	04486	5560-9436
A1 S6	5060-9436	7	1	SW-PB SPST NO	04486	5560-9436
A1 S7	5060-9436	7	1	SW-PB SPST NO	04486	5560-9436
A1 S8	5060-9436	7	1	SW-PB SPST NO	04486	5560-9436
A1 S21	5060-9436	7	1	SW-PB SPST NO	04486	5560-9436
A1 S22	5060-9436	7	1	SW-PB SPST NO	04486	5560-9436
A1 S23	5060-9436	7	1	SW-PB SPST NO	04486	5560-9436
A1 S24	5060-9436	7	1	SW-PB SPST NO	04486	5560-9436
A1 S25	5060-9436	7	1	SW-PB SPST NO	04486	5560-9436
A1 S26	5060-9436	7	1	SW-PB SPST NO	04486	5560-9436
A1 S27	5060-9436	7	1	SW-PB SPST NO	04486	5560-9436
A1 S28	5060-9436	7	1	SW-PB SPST NO	04486	5560-9436
A1 S41	5060-9436	7	1	SW-PB SPST NO	04486	5560-9436
A1 S42	5060-9436	7	1	SW-PB SPST NO	04486	5560-9436
A1 S43	5060-9436	7	1	SW-PB SPST NO	04486	5560-9436
A1 S44	5060-9436	7	1	SW-PB SPST NO	04486	5560-9436
A1 S45	5060-9436	7	1	SW-PB SPST NO	04486	5560-9436
A1 S46	5060-9436	7	1	SW-PB SPST NO	04486	5560-9436
A1 S47	5060-9436	7	1	SW-PB SPST NO	04486	5560-9436
A1 S48	5060-9436	7	1	SW-PB SPST NO	04486	5560-9436
A1 S51	5060-9436	7	1	SW-PB SPST NO	04486	5560-9436
A1 S52	5060-9436	7	1	SW-PB SPST NO	04486	5560-9436

Table C-3. 8131A Standard Keyboard Parts List (continued)

Reference	HP Part #	CD	Qty	Description	Manuf'r	Part #
A1 S53	5060-9436	7	1	SW-PB SPST NO	04486	5560-9436
A1 S54	5060-9436	7	1	SW-PB SPST NO	04486	5560-9436
A1 U1	1820-3847	0	1	IC-MM74HCT138N	01698	SN74HCT138N
A1 U2	1820-3847	0	1	IC-MM74HCT138N	01698	SN74HCT138N
A1 U3	1820-3847	0	1	IC-MM74HCT138N	01698	SN74HCT138N
A1 U4	1820-3456	7	1	IC-MM74HCT244N	01698	SN74HCT244N
A1 U5	1820-3456	7	1	IC-MM74HCT244N	01698	SN74HCT244N
A1 U6	1858-0014	6	1	XSTR ARY 14P-DIP	02037	
A1 U7	1858-0014	6	1	XSTR ARY 14P-DIP	02037	
A1 U8	1858-0014	6	1	XSTR ARY 14P-DIP	02037	

Motherboard

Table C-4. 8131A Motherboard Parts List

Reference	HP Part #	CD	Qty	Description	Manuf'r	Part #
A2	08131-66502	5	1	BD AY MOTHER	28480	08131-66502
A2 J1	1251-8320	7	1	CONN-POST-TP-SKT	04225	FC064-031-2
A2 J2	1251-8320	7	1	CONN-POST-TP-SKT	04225	FC064-031-2
A2 J3	1251-8320	7	1	CONN-POST-TP-SKT	04225	FC064-031-2
A2 J4	1251-8320	7	1	CONN-POST-TP-SKT	04225	FC064-031-2
A2 J5	1251-8320	7	1	CONN-POST-TP-SKT	04225	FC064-031-2
A2 J6	1252-0027	7	1	CONN-POST-TP-SKT	05879	706-C143-CO96F-23A-204
A2 MP11	8160-0392	1		RFI STRP-FINGERS	03647	97-500-SNPB
A2 MP12	8160-0392	1		RFI STRP-FINGERS	03647	97-500-SNPB
A2 MP13	8160-0392	1		RFI STRP-FINGERS	03647	97-500-SNPB
A2 MP14	8160-0392	1		RFI STRP-FINGERS	03647	97-500-SNPB
A2 U1	1826-0760	2	1	IC 335	03406	LM335AZ
A2 W1	08131-61601	5	1	CBL CONN KEY	28480	08131-61601

Microprocessor Board

Table C-5. 8131A Microprocessorboard Parts List

Reference	HP Part #	CD	Qty	Description	Manuf'r	Part #
A3	08131-66503	6	1	BD AY UPCR	28480	08131-66503
A3 BT100	1420-0273	2	1	BAT 3V	08709	BR-2/3AT2P
A3 C3	0160-5746	1	1	CAP 0.1uF 50 V	06121	B37987-T5104-M11
A3 C4	0160-5746	1	1	CAP 0.1uF 50 V	06121	B37987-T5104-M11
A3 C100	0160-6623	5	1	CAP 0.1uF 50 V	02010	SA115C104MAAH
A3 C101	0160-6623	5	1	CAP 0.1uF 50 V	02010	SA115C104MAAH
A3 C102	0160-6623	5	1	CAP 0.1uF 50 V	02010	SA115C104MAAH
A3 C103	0160-6623	5	1	CAP 0.1uF 50 V	02010	SA115C104MAAH
A3 C104	0160-6623	5	1	CAP 0.1uF 50 V	02010	SA115C104MAAH
A3 C105	0160-6623	5	1	CAP 0.1uF 50 V	02010	SA115C104MAAH
A3 C106	0160-6623	5	1	CAP 0.1uF 50 V	02010	SA115C104MAAH
A3 C107	0160-6623	5	1	CAP 0.1uF 50 V	02010	SA115C104MAAH
A3 C202	0160-6623	5	1	CAP 0.1uF 50 V	02010	SA115C104MAAH
A3 C203	0160-6623	5	1	CAP 0.1uF 50 V	02010	SA115C104MAAH
A3 C204	0160-6623	5	1	CAP 0.1uF 50 V	02010	SA115C104MAAH
A3 C205	0160-6623	5	1	CAP 0.1uF 50 V	02010	SA115C104MAAH
A3 C301	0160-6623	5	1	CAP 0.1uF 50 V	02010	SA115C104MAAH
A3 C302	0160-6623	5	1	CAP 0.1uF 50 V	02010	SA115C104MAAH
A3 C303	0160-6623	5	1	CAP 0.1uF 50 V	02010	SA115C104MAAH
A3 C304	0160-6623	5	1	CAP 0.1uF 50 V	02010	SA115C104MAAH
A3 C400	0160-6623	5	1	CAP 0.1uF 50 V	02010	SA115C104MAAH
A3 C401	0160-6623	5	1	CAP 0.1uF 50 V	02010	SA115C104MAAH
A3 C402	0160-6623	5	1	CAP 0.1uF 50 V	02010	SA115C104MAAH
A3 C404	0160-6623	5	1	CAP 0.1uF 50 V	02010	SA115C104MAAH
A3 C406	0160-6623	5	1	CAP 0.1uF 50 V	02010	SA115C104MAAH

Table C-5. 8131A Microprocessorboard Parts List (continued)

Reference	HP Part #	CD	Qty	Description	Manuf'r	Part #
A3 C408	0160-6623	5	1	CAP 0.1uF 50 V	02010	SA115C104MAAH
A3 C409	0160-6623	5	1	CAP 0.1uF 50 V	02010	SA115C104MAAH
A3 C410	0160-6623	5	1	CAP 0.1uF 50 V	02010	SA115C104MAAH
A3 C500	0160-6623	5	1	CAP 0.1uF 50 V	02010	SA115C104MAAH
A3 C501	0160-6623	5	1	CAP 0.1uF 50 V	02010	SA115C104MAAH
A3 C504	0160-6623	5	1	CAP 0.1uF 50 V	02010	SA115C104MAAH
A3 C505	0160-6623	5	1	CAP 0.1uF 50 V	02010	SA115C104MAAH
A3 C506	0160-6623	5	1	CAP 0.1uF 50 V	02010	SA115C104MAAH
A3 CP1	0180-2207	5	1	CAP 100uF 10 V	04200	150D107X9010R2-DYS
A3 CP2	0180-2207	5	1	CAP 100uF 10 V	04200	150D107X9010R2-DYS
A3 CR200	1901-0535	9	1	DIO- SCHOTTKY SM	02062	50825511
A3 CR400	1901-0535	9	1	DIO- SCHOTTKY SM	02062	50825511
A3 CR401	1901-0535	9	1	DIO- SCHOTTKY SM	02062	50825511
A3 DS100	1990-0485	5	1	LED-LMP	01542	HLMP-1503
A3 J1	1251-8324	1	1	CONN-POST-TP-HDR	04486	G06M96P4BEBL-004-715
A3 J2	1252-1979	0	1	CONN-POST-TP-HDR	04726	3627-5202
A3 J400	1251-4682	6	1	CONN-POST-TP-HDR	03394	1102-1-103-02
A3 J501	1251-7745	8	1	CONN-POST-TP-HDR	03418	22-12-2024
A3 L1	9100-3139	5	1	L 75UH +-15%	00075	
A3 MP5	1200-0654	7	1	SKT-IC 40-CONT	01380	2-641606-1
A3 MP6	1200-0654	7	1	SKT-IC 40-CONT	01380	2-641606-1
A3 MP7	1200-0654	7	1	SKT-IC 40-CONT	01380	2-641606-1
A3 MP8	1200-0567	1	1	SKT-IC 28-CONT	01380	2-641605-1
A3 MP9	1200-0567	1	1	SKT-IC 28-CONT	01380	2-641605-1
A3 MP10	1400-0824	7	1	STRAP-CABLE	04225	TY-23M
A3 Q100	1854-0583	6	1	XSTR NPN SI	02037	MPS-A18
A3 Q200	1853-0281	9	1	XSTR PNP 2N2907A	02037	2N2907A
A3 R100	0757-0449	6	1	RES 20K 1% .125W	00746	CRB14 OR CRB25
A3 R101	0698-3161	9	1	RES 38.3K 1% .12	00746	CRB14 OR CRB25
A3 R102	0757-0407	6	1	RES 200 1% .125W	00746	CRB14 OR CRB25

Table C-5. 8131A Microprocessorboard Parts List (continued)

Reference	HP Part #	CD	Qty	Description	Manuf'r	Part #
A3 R200	0698-3156	2	1	RES 14.7K 1% .12	00746	CRB14 OR CRB25
A3 R201	0757-0419	0	1	RES 681 1% .125W	00746	CRB14 OR CRB25
A3 R202	0757-0280	3	1	RES 1K 1% .125W	00746	CRB14 OR CRB25
A3 R203	8159-0005	0	1	RES-ZERO OHMS	01339	L-2007-1
A3 R204	0757-0394	0	1	RES 51.1 1% .125	00746	CRB14 OR CRB25
A3 R206	8159-0005	0	1	RES-ZERO OHMS	01339	L-2007-1
A3 R400	0757-0394	0	1	RES 51.1 1% .125	00746	CRB14 OR CRB25
A3 R401	0757-0394	0	1	RES 51.1 1% .125	00746	CRB14 OR CRB25
A3 R500	8159-0005	0	1	RES-ZERO OHMS	01339	L-2007-1
A3 RA100	1810-0243	3	1	NETWORK-RES DIP	02483	761-3-R6.8K
A3 RA101	1810-0503	8	1	NETWORK-RES DIP	02483	761-3-R3.3K
A3 RA200	1810-0316	1	1	NETWORK-RES DIP	02483	761-3-R10K
A3 RA201	1810-0316	1	1	NETWORK-RES DIP	02483	761-3-R10K
A3 RA300	1810-0316	1	1	NETWORK-RES DIP	02483	761-3-R10K
A3 RA301	1810-0316	1	1	NETWORK-RES DIP	02483	761-3-R10K
A3 RA400	1810-0470	8	1	NETWORK-RES DIP	02483	761-3-R2.2K
A3 RA401	1810-0316	1	1	NETWORK-RES DIP	02483	761-3-R10K
A3 U100	1820-3456	7	1	IC-MM74HCT244N	01698	SN74HCT244N
A3 U101	1820-2698	7	1	IC-74F240PC	02910	74F240N
A3 U102	1820-2150	6	1	IC-8279-5	03811	D8279-5
A3 U103	1820-2861	6	1	IC-74F138PC	01698	SN74F138N
A3 U104	1820-2701	3	1	IC-74F374PC	01698	SN74F374N
A3 U105	1820-2795	5	1	IC-74F244PC	01698	SN74F244N
A3 U106	1820-3294	1	1	IC-SN74ALS374N	01698	SN74ALS374N
A3 U107	1820-3294	1	1	IC-SN74ALS374N	01698	SN74ALS374N
A3 U202	1818-3760	1	1	IC TC5564APL-15	06354	TC5564APL-15
A3 U203	1818-3760	1	1	IC TC5564APL-15	06354	TC5564APL-15
A3 U204	08131-13707	1	1	EPROM 1	28480	08131-13707
A3 U205	08131-13708	2	1	EPROM 2	28480	08131-13708
A3 U206	1858-0053	3	1	XSTR ARY 14P-DIP	02037	

Table C-5. 8131A Microprocessorboard Parts List (continued)

Reference	HP Part #	CD	Qty	Description	Manuf'r	Part #
A3 U207	1820-2506	6	1	IC-74F04PC	01698	SN74F04N
A3 U208	1820-2656	7	1	IC-SN74ALS00AN	01698	SN74ALS00AN
A3 U300	1820-3629	6	1	IC-MM74HCT04N	03406	MM74HCT04N
A3 U301	1820-3173	5	1	IC-MM74HC112N	02037	MC74HC112N
A3 U302	1820-2775	1	1	IC-SN74ALS10AN	01698	SN74ALS10AN
A3 U303	1820-3847	0	1	IC-MM74HCT138N	01698	SN74HCT138N
A3 U304	1820-3796	8	1	IC-MM74HCT139N	02910	74HCT139N
A3 U305	1820-3847	0	1	IC-MM74HCT138N	01698	SN74HCT138N
A3 U306	1820-5111	5	1	IC-74HCT21N	02910	74HCT21N
A3 U400	1820-3183	7	1	IC-MC74HC03N	02037	MC74HC03N
A3 U401	1820-3848	1	1	IC-MM74HCT374N	01698	SN74HCT374N
A3 U402	1820-4086	1	1	IC-74HCT273N	02910	74HCT273N
A3 U403	1820-3505	7	1	IC-SN74ALS191N	01698	SN74ALS191N
A3 U404	1820-4086	1	1	IC-74HCT273N	02910	74HCT273N
A3 U405	1820-2690	9	1	IC-74F32PC	01698	SN74F32N
A3 U406	1820-3665	0	1	IC-MM74HCT245N	01698	SN74HCT245N
A3 U407	1820-3940	4	1	IC-CD74HCT174E	03799	CD74HCT174E
A3 U408	1820-2854	7	1	IC-68B09ES	02037	MC68B09ES
A3 U409	1820-3940	4	1	IC-CD74HCT174E	03799	CD74HCT174E
A3 U410	1820-3940	4	1	IC-CD74HCT174E	03799	CD74HCT174E
A3 U500	1820-3348	6	1	IC-74F163APC	02910	74F163AN
A3 U501	1820-2694	3	1	IC-74F112PC	01698	SN74F112N
A3 U502	1820-2686	3	1	IC-74F08PC	01698	SN74F08
A3 U503	1820-3664	9	1	IC-MM74HCT00N	02910	74HCT00N
A3 U504	1820-2548	6	1	IC-9914	01698	
A3 U505	1820-3431	8	1	IC-INTERFACE	03406	DS75160AN
A3 U506	1820-3518	2	1	IC-INTERFACE	03406	DS75162AN
A3 W1	1258-0141	8	1	JUMPER-REM	01380	530153-2
A3 Y500	1813-0285	9	1	CLK-OSC-XTAL	01417	HS-100-20MHZ

Power Control Board

Table C-6. 8131A Power Control Board Parts List

Reference	HP Part #	CD	Qty	Description	Manuf'r	Part #
A4	08131-66504	7	1	BD AY PWR CTL	28480	08131-66504
A4 C2	0160-4822	2	1	CAP 1000pF 100 V	02010	SA201A102JAAH
A4 C5	0160-4822	2	1	CAP 1000pF 100 V	02010	SA201A102JAAH
A4 C6	0160-4822	2	1	CAP 1000pF 100 V	02010	SA201A102JAAH
A4 C8	0160-4822	2	1	CAP 1000pF 100 V	02010	SA201A102JAAH
A4 C10	0160-4822	2	1	CAP 1000pF 100 V	02010	SA201A102JAAH
A4 C12	0160-4822	2	1	CAP 1000pF 100 V	02010	SA201A102JAAH
A4 C14	0160-4822	2	1	CAP 1000pF 100 V	02010	SA201A102JAAH
A4 CP1	0180-4129	4	1	CAP 1uF 35 V	04200	173D105X9035V
A4 CP4	0180-4129	4	1	CAP 1uF 35 V	04200	173D105X9035V
A4 CP7	0180-4129	4	1	CAP 1uF 35 V	04200	173D105X9035V
A4 CP9	0180-4129	4	1	CAP 1uF 35 V	04200	173D105X9035V
A4 CP11	0180-4129	4	1	CAP 1uF 35 V	04200	173D105X9035V
A4 CP13	0180-4129	4	1	CAP 1uF 35 V	04200	173D105X9035V
A4 CP15	0180-0116	1	1	CAP 6.8uF 35 V	04200	150D685X9035B2-DYS
A4 CP16	0180-4129	4	1	CAP 1uF 35 V	04200	173D105X9035V
A4 CP17	0180-2690	0	1	CAP 3.3uF 15 V	04200	150D335X9015A2
A4 CP18	0180-2690	0	1	CAP 3.3uF 15 V	04200	150D335X9015A2
A4 CR1	1901-1098	1	1	DIO-1N4150	00746	
A4 CR2	1901-1098	1	1	DIO-1N4150	00746	
A4 CR3	1901-1098	1	1	DIO-1N4150	00746	
A4 CR4	1901-1098	1	1	DIO-1N4150	00746	
A4 CR5	1901-1098	1	1	DIO-1N4150	00746	
A4 CR6	1901-1098	1	1	DIO-1N4150	00746	
A4 CR7	1901-1098	1	1	DIO-1N4150	00746	
A4 CR8	1901-1098	1	1	DIO-1N4150	00746	
A4 CR9	1901-1098	1	1	DIO-1N4150	00746	
A4 CR10	1901-1098	1	1	DIO-1N4150	00746	

Table C-6. 8131A Power Control Board Parts List (continued)

Reference	HP Part #	CD	Qty	Description	Manuf'r	Part #
A4 CR11	1901-1098	1	1	DIO-1N4150	00746	
A4 CR12	1901-1098	1	1	DIO-1N4150	00746	
A4 CR13	1901-1098	1	1	DIO-1N4150	00746	
A4 CR14	1901-1098	1	1	DIO-1N4150	00746	
A4 CR15	1901-1098	1	1	DIO-1N4150	00746	
A4 CR16	1901-1098	1	1	DIO-1N4150	00746	
A4 CR17	1901-1098	1	1	DIO-1N4150	00746	
A4 CR18	1901-1098	1	1	DIO-1N4150	00746	
A4 CR19	1901-1098	1	1	DIO-1N4150	00746	
A4 CR20	1901-1098	1	1	DIO-1N4150	00746	
A4 J2	1252-1506	9	1	CONN-POST-TP-SKT	01380	1-166592-0
A4 J3	1252-1506	9	1	CONN-POST-TP-SKT	01380	1-166592-0
A4 Q1	1854-0392	5	1	XSTR NPN SI	02037	2N5088
A4 Q2	1854-0583	6	1	XSTR NPN SI	02037	MPS-A18
A4 Q4	1854-0583	6	1	XSTR NPN SI	02037	MPS-A18
A4 Q5	1854-0583	6	1	XSTR NPN SI	02037	MPS-A18
A4 Q6	1854-0583	6	1	XSTR NPN SI	02037	MPS-A18
A4 Q7	1853-0569	6	1	XSTR PNP SI	02037	
A4 Q8	1853-0569	6	1	XSTR PNP SI	02037	
A4 Q9	1853-0569	6	1	XSTR PNP SI	02037	
A4 Q10	1853-0569	6	1	XSTR PNP SI	02037	
A4 Q11	1853-0569	6	1	XSTR PNP SI	02037	
A4 Q12	1853-0569	6	1	XSTR PNP SI	02037	
A4 Q13	1853-0569	6	1	XSTR PNP SI	02037	
A4 Q14	1853-0569	6	1	XSTR PNP SI	02037	
A4 Q15	1854-0637	1	1	XSTR NPN 2N2219A	02037	2N2219A
A4 Q16	1854-0583	6	1	XSTR NPN SI	02037	MPS-A18
A4 Q17	1853-0569	6	1	XSTR PNP SI	02037	
A4 Q18	1853-0569	6	1	XSTR PNP SI	02037	
A4 Q20	1853-0569	6	1	XSTR PNP SI	02037	

Table C-6. 8131A Power Control Board Parts List (continued)

Reference	HP Part #	CD	Qty	Description	Manuf'r	Part #
A4 R1	0757-0278	9	1	RES 1.78K 1% .12	00746	CRB14 OR CRB25
A4 R2	0698-3160	8	1	RES 31.6K 1% .12	00746	CRB14 OR CRB25
A4 R3	0757-0442	9	1	RES 10K 1% .125W	00746	CRB14 OR CRB25
A4 R4	0698-3155	1	1	RES 4.64K 1% .12	00746	CRB14 OR CRB25
A4 R5	0757-0439	4	1	RES 6.81K 1% .12	00746	CRB14 OR CRB25
A4 R6	0757-0442	9	1	RES 10K 1% .125W	00746	CRB14 OR CRB25
A4 R7	0757-0280	3	1	RES 1K 1% .125W	00746	CRB14 OR CRB25
A4 R8	0757-0472	5	1	RES 200K 1% .125	00746	CRB14 OR CRB25
A4 R9	0698-6620	1	1	RES 150K .1% .12	00746	CRB14 OR CRB25
A4 R10	0698-6353	7	1	RES 50K .1% .125	00746	CRB14 OR CRB25
A4 R11	0698-4483	0	1	RES 18.7K 1% .12	00746	CRB14 OR CRB25
A4 R12	0757-0472	5	1	RES 200K 1% .125	00746	CRB14 OR CRB25
A4 R13	0757-0444	1	1	RES 12.1K 1% .12	00746	CRB14 OR CRB25
A4 R14	0757-0442	9	1	RES 10K 1% .125W	00746	CRB14 OR CRB25
A4 R15	0698-3155	1	1	RES 4.64K 1% .12	00746	CRB14 OR CRB25
A4 R16	0757-0438	3	1	RES 5.11K 1% .12	00746	CRB14 OR CRB25
A4 R17	0698-3155	1	1	RES 4.64K 1% .12	00746	CRB14 OR CRB25
A4 R18	0698-3155	1	1	RES 4.64K 1% .12	00746	CRB14 OR CRB25
A4 R19	0757-0442	9	1	RES 10K 1% .125W	00746	CRB14 OR CRB25
A4 R20	0698-4425	0	1	RES 1.54K 1% .12	00746	CRB14 OR CRB25
A4 R21	0757-0472	5	1	RES 200K 1% .125	00746	CRB14 OR CRB25
A4 R22	0757-0465	6	1	RES 100K 1% .125	00746	CRB14 OR CRB25
A4 R23	0699-0844	1	1	RES 51.1K .1% .1	00746	CRB14 OR CRB25
A4 R24	0698-6353	7	1	RES 50K .1% .125	00746	CRB14 OR CRB25
A4 R25	0757-0442	9	1	RES 10K 1% .125W	00746	CRB14 OR CRB25
A4 R26	0698-3155	1	1	RES 4.64K 1% .12	00746	CRB14 OR CRB25
A4 R27	0698-3155	1	1	RES 4.64K 1% .12	00746	CRB14 OR CRB25
A4 R28	0757-0439	4	1	RES 6.81K 1% .12	00746	CRB14 OR CRB25
A4 R29	0757-0472	5	1	RES 200K 1% .125	00746	CRB14 OR CRB25
A4 R30	0698-4435	2	1	RES 2.49K 1% .12	00746	CRB14 OR CRB25

Table C-6. 8131A Power Control Board Parts List (continued)

Reference	HP Part #	CD	Qty	Description	Manuf'r	Part #
A4 R31	0757-0465	6	1	RES 100K 1% .125	00746	CRB14 OR CRB25
A4 R32	0698-6353	7	1	RES 50K .1% .125	00746	CRB14 OR CRB25
A4 R33	0699-0721	3	1	RES 33K .1% .125	00746	CRB14 OR CRB25
A4 R34	0757-0280	3	1	RES 1K 1% .125W	00746	CRB14 OR CRB25
A4 R35	0757-0442	9	1	RES 10K 1% .125W	00746	CRB14 OR CRB25
A4 R36	0757-0444	1	1	RES 12.1K 1% .12	00746	CRB14 OR CRB25
A4 R37	0698-3155	1	1	RES 4.64K 1% .12	00746	CRB14 OR CRB25
A4 R38	0757-0442	9	1	RES 10K 1% .125W	00746	CRB14 OR CRB25
A4 R39	0757-0438	3	1	RES 5.11K 1% .12	00746	CRB14 OR CRB25
A4 R40	0757-0472	5	1	RES 200K 1% .125	00746	CRB14 OR CRB25
A4 R41	0757-0422	5	1	RES 909 1% .125W	00746	CRB14 OR CRB25
A4 R42	0757-0465	6	1	RES 100K 1% .125	00746	CRB14 OR CRB25
A4 R43	0698-6353	7	1	RES 50K .1% .125	00746	CRB14 OR CRB25
A4 R44	0699-0844	1	1	RES 51.1K .1% .1	00746	CRB14 OR CRB25
A4 R45	0757-0442	9	1	RES 10K 1% .125W	00746	CRB14 OR CRB25
A4 R46	0698-3160	8	1	RES 31.6K 1% .12	00746	CRB14 OR CRB25
A4 R47	0757-0421	4	1	RES 825 1% .125W	00746	CRB14 OR CRB25
A4 R48	0698-3155	1	1	RES 4.64K 1% .12	00746	CRB14 OR CRB25
A4 R49	0757-0442	9	1	RES 10K 1% .125W	00746	CRB14 OR CRB25
A4 R50	0757-0439	4	1	RES 6.81K 1% .12	00746	CRB14 OR CRB25
A4 R51	0757-0472	5	1	RES 200K 1% .125	00746	CRB14 OR CRB25
A4 R52	0757-0274	5	1	RES 1.21K 1% .12	00746	CRB14 OR CRB25
A4 R53	0698-6353	7	1	RES 50K .1% .125	00746	CRB14 OR CRB25
A4 R54	0698-6620	1	1	RES 150K .1% .12	00746	CRB14 OR CRB25
A4 R55	0757-0442	9	1	RES 10K 1% .125W	00746	CRB14 OR CRB25
A4 R56	0698-3161	9	1	RES 38.3K 1% .12	00746	CRB14 OR CRB25
A4 R57	0698-3153	9	1	RES 3.83K 1% .12	00746	CRB14 OR CRB25
A4 R58	0698-3155	1	1	RES 4.64K 1% .12	00746	CRB14 OR CRB25
A4 R59	0698-3156	2	1	RES 14.7K 1% .12	00746	CRB14 OR CRB25
A4 R60	0757-0441	8	1	RES 8.25K 1% .12	00746	CRB14 OR CRB25

Table C-6. 8131A Power Control Board Parts List (continued)

Reference	HP Part #	CD	Qty	Description	Manuf'r	Part #
A4 R61	0757-0472	5	1	RES 200K 1% .125	00746	CRB14 OR CRB25
A4 R62	0757-0280	3	1	RES 1K 1% .125W	00746	CRB14 OR CRB25
A4 R63	0698-6353	7	1	RES 50K .1% .125	00746	CRB14 OR CRB25
A4 R64	0698-6376	4	1	RES 200K .1% .12	00746	CRB14 OR CRB25
A4 R65	0757-0416	7	1	RES 511 1% .125W	00746	CRB14 OR CRB25
A4 R66	0757-0280	3	1	RES 1K 1% .125W	00746	CRB14 OR CRB25
A4 R67	0698-6360	6	1	RES 10K .1% .125	00746	CRB14 OR CRB25
A4 R68	0698-6360	6	1	RES 10K .1% .125	00746	CRB14 OR CRB25
A4 R69	0698-6360	6	1	RES 10K .1% .125	00746	CRB14 OR CRB25
A4 R70	0698-6360	6	1	RES 10K .1% .125	00746	CRB14 OR CRB25
A4 R71	0698-6360	6	1	RES 10K .1% .125	00746	CRB14 OR CRB25
A4 R72	0757-0280	3	1	RES 1K 1% .125W	00746	CRB14 OR CRB25
A4 R73	0757-0394	0	1	RES 51.1 1% .125	00746	CRB14 OR CRB25
A4 TP1	0360-2264	6	1	TERM.-TEST POINT	10358	1095D
A4 TP2	0360-2264	6	1	TERM.-TEST POINT	10358	1095D
A4 TP3	0360-2264	6	1	TERM.-TEST POINT	10358	1095D
A4 TP4	0360-2264	6	1	TERM.-TEST POINT	10358	1095D
A4 TP5	0360-2264	6	1	TERM.-TEST POINT	10358	1095D
A4 U1	1826-0346	0	1	IC 358	03406	LM358N
A4 U2	1826-0346	0	1	IC 358	03406	LM358N
A4 U3	1826-0346	0	1	IC 358	03406	LM358N
A4 U4	1826-0346	0	1	IC 358	03406	LM358N
A4 U5	1826-0346	0	1	IC 358	03406	LM358N
A4 U6	1826-0346	0	1	IC 358	03406	LM358N
A4 U7	1826-0718	0	1	IC MC1404U5	02037	MC1404U5
A4 U8	1826-0161	7	1	IC 324	02037	LM324N
A4 VR1	1902-0964	0	1	DIO-ZNR 18V 5%	02037	
A4 VR2	1902-0955	9	1	DIO-ZNR 7.5V 5%	02037	

Table C-7. 8131A Standard Timing Board Parts List

Reference	HP Part #	CD	Qty	Description	Manuf'r	Part #
A5	08131-66505	8	1	BD AY TIMING STD	28480	08131-66505
A5 C101	0160-5750	7	1	CAP 2200pF 100 V	06121	B37981-J1222-M034
A5 C103	0160-5750	7	1	CAP 2200pF 100 V	06121	B37981-J1222-M034
A5 C105	0160-5750	7	1	CAP 2200pF 100 V	06121	B37981-J1222-M034
A5 C107	0160-5750	7	1	CAP 2200pF 100 V	06121	B37981-J1222-M034
A5 C109	0160-5750	7	1	CAP 2200pF 100 V	06121	B37981-J1222-M034
A5 C110	0160-6623	5	1	CAP 0.1uF 50 V	02010	SA115C104MAAH
A5 C111	0160-6623	5	1	CAP 0.1uF 50 V	02010	SA115C104MAAH
A5 C112	0160-6623	5	1	CAP 0.1uF 50 V	02010	SA115C104MAAH
A5 C113	0160-6623	5	1	CAP 0.1uF 50 V	02010	SA115C104MAAH
A5 C117	0160-6623	5	1	CAP 0.1uF 50 V	02010	SA115C104MAAH
A5 C121	0160-6623	5	1	CAP 0.1uF 50 V	02010	SA115C104MAAH
A5 C122	0160-6623	5	1	CAP 0.1uF 50 V	02010	SA115C104MAAH
A5 C126	0160-6623	5	1	CAP 0.1uF 50 V	02010	SA115C104MAAH
A5 C127	0160-6623	5	1	CAP 0.1uF 50 V	02010	SA115C104MAAH
A5 C131	0160-6623	5	1	CAP 0.1uF 50 V	02010	SA115C104MAAH
A5 C140	0160-6623	5	1	CAP 0.1uF 50 V	02010	SA115C104MAAH
A5 C141	0160-6623	5	1	CAP 0.1uF 50 V	02010	SA115C104MAAH
A5 C142	0160-6623	5	1	CAP 0.1uF 50 V	02010	SA115C104MAAH
A5 C181	0160-5746	1	1	CAP 0.1uF 50 V	06121	B37987-T5104-M11
A5 C202	0160-6623	5	1	CAP 0.1uF 50 V	02010	SA115C104MAAH
A5 C203	0160-6623	5	1	CAP 0.1uF 50 V	02010	SA115C104MAAH
A5 C204	0160-6623	5	1	CAP 0.1uF 50 V	02010	SA115C104MAAH
A5 C205	0160-6500	7	1	CAP 0.01uF 100 V	02010	SA101C103KAAH

Table C-7. 8131A Standard Timing Board Parts List (continued)

Reference	HP Part #	CD	Qty	Description	Manuf'r	Part #
A5 C206	0160-6500	7	1	CAP 0.01uF 100 V	02010	SA101C103KAAH
A5 C207	0160-6623	5	1	CAP 0.1uF 50 V	02010	SA115C104MAAH
A5 C208	0160-6623	5	1	CAP 0.1uF 50 V	02010	SA115C104MAAH
A5 C209	0160-6500	7	1	CAP 0.01uF 100 V	02010	SA101C103KAAH
A5 C210	0160-6500	7	1	CAP 0.01uF 100 V	02010	SA101C103KAAH
A5 C220	0160-6500	7	1	CAP 0.01uF 100 V	02010	SA101C103KAAH
A5 C221	0160-6500	7	1	CAP 0.01uF 100 V	02010	SA101C103KAAH
A5 C222	0160-6500	7	1	CAP 0.01uF 100 V	02010	SA101C103KAAH
A5 C223	0160-5726	7	1	CAP 0.01uF 100 V	06121	B37987-J1103-M034
A5 C224	0160-5726	7	1	CAP 0.01uF 100 V	06121	B37987-J1103-M034
A5 C300	0160-5746	1	1	CAP 0.1uF 50 V	06121	B37987-T5104-M11
A5 C301	0160-6623	5	1	CAP 0.1uF 50 V	02010	SA115C104MAAH
A5 C303	0160-4535	4	1	CAP 1uF 50 V	02010	SR305C105KAAH
A5 C304	0160-5746	1	1	CAP 0.1uF 50 V	06121	B37987-T5104-M11
A5 C305	0160-5746	1	1	CAP 0.1uF 50 V	06121	B37987-T5104-M11
A5 C306	0160-5726	7	1	CAP 0.01uF 100 V	06121	B37987-J1103-M034
A5 C307	0160-6623	5	1	CAP 0.1uF 50 V	02010	SA115C104MAAH
A5 C308	0160-6623	5	1	CAP 0.1uF 50 V	02010	SA115C104MAAH
A5 C309	0160-6623	5	1	CAP 0.1uF 50 V	02010	SA115C104MAAH
A5 C310	0160-6623	5	1	CAP 0.1uF 50 V	02010	SA115C104MAAH
A5 C311	0160-5726	7	1	CAP 0.01uF 100 V	06121	B37987-J1103-M034
A5 C312	0160-6500	7	1	CAP 0.01uF 100 V	02010	SA101C103KAAH
A5 C313	0160-6500	7	1	CAP 0.01uF 100 V	02010	SA101C103KAAH
A5 C314	0160-6623	5	1	CAP 0.1uF 50 V	02010	SA115C104MAAH
A5 C315	0160-6623	5	1	CAP 0.1uF 50 V	02010	SA115C104MAAH
A5 C317	0160-6623	5	1	CAP 0.1uF 50 V	02010	SA115C104MAAH
A5 C318	0160-6623	5	1	CAP 0.1uF 50 V	02010	SA115C104MAAH
A5 C320	0160-6623	5	1	CAP 0.1uF 50 V	02010	SA115C104MAAH
A5 C321	0160-6500	7	1	CAP 0.01uF 100 V	02010	SA101C103KAAH
A5 C322	0160-6500	7	1	CAP 0.01uF 100 V	02010	SA101C103KAAH

Table C-7. 8131A Standard Timing Board Parts List (continued)

Reference	HP Part #	CD	Qty	Description	Manuf'r	Part #
A5 C324	0160-6623	5	1	CAP 0.1uF 50 V	02010	SA115C104MAAH
A5 C325	0160-5746	1	1	CAP 0.1uF 50 V	06121	B37987-T5104-M11
A5 C327	0160-6500	7	1	CAP 0.01uF 100 V	02010	SA101C103KAAH
A5 C328	0160-6500	7	1	CAP 0.01uF 100 V	02010	SA101C103KAAH
A5 C330	0160-6623	5	1	CAP 0.1uF 50 V	02010	SA115C104MAAH
A5 C331	0160-6623	5	1	CAP 0.1uF 50 V	02010	SA115C104MAAH
A5 C333	0160-6623	5	1	CAP 0.1uF 50 V	02010	SA115C104MAAH
A5 C335	0160-4535	4	1	CAP 1uF 50 V	02010	SR305C105KAAH
A5 C336	0160-6623	5	1	CAP 0.1uF 50 V	02010	SA115C104MAAH
A5 C340	0160-6623	5	1	CAP 0.1uF 50 V	02010	SA115C104MAAH
A5 C341	0160-5726	7	1	CAP 0.01uF 100 V	06121	B37987-J1103-M034
A5 C342	0160-6500	7	1	CAP 0.01uF 100 V	02010	SA101C103KAAH
A5 C343	0160-6500	7	1	CAP 0.01uF 100 V	02010	SA101C103KAAH
A5 C350	0160-6623	5	1	CAP 0.1uF 50 V	02010	SA115C104MAAH
A5 C360	0160-6623	5	1	CAP 0.1uF 50 V	02010	SA115C104MAAH
A5 C363	0160-6623	5	1	CAP 0.1uF 50 V	02010	SA115C104MAAH
A5 C399	0160-5741	6	1	CAP 47pF 100 V	06121	B37979-J1470-J034
A5 C400	0160-5746	1	1	CAP 0.1uF 50 V	06121	B37987-T5104-M11
A5 C401	0160-5746	1	1	CAP 0.1uF 50 V	06121	B37987-T5104-M11
A5 C403	0160-4535	4	1	CAP 1uF 50 V	02010	SR305C105KAAH
A5 C404	0160-6623	5	1	CAP 0.1uF 50 V	02010	SA115C104MAAH
A5 C405	0160-5746	1	1	CAP 0.1uF 50 V	06121	B37987-T5104-M11
A5 C406	0160-5726	7	1	CAP 0.01uF 100 V	06121	B37987-J1103-M034
A5 C411	0160-5726	7	1	CAP 0.01uF 100 V	06121	B37987-J1103-M034
A5 C412	0160-6500	7	1	CAP 0.01uF 100 V	02010	SA101C103KAAH
A5 C413	0160-6500	7	1	CAP 0.01uF 100 V	02010	SA101C103KAAH
A5 C414	0160-6623	5	1	CAP 0.1uF 50 V	02010	SA115C104MAAH
A5 C415	0160-6623	5	1	CAP 0.1uF 50 V	02010	SA115C104MAAH
A5 C417	0160-6623	5	1	CAP 0.1uF 50 V	02010	SA115C104MAAH
A5 C418	0160-6623	5	1	CAP 0.1uF 50 V	02010	SA115C104MAAH

Table C-7. 8131A Standard Timing Board Parts List (continued)

Reference	HP Part #	CD	Qty	Description	Manuf'r	Part #
A5 C420	0160-6623	5	1	CAP 0.1uF 50 V	02010	SA115C104MAAH
A5 C421	0160-6500	7	1	CAP 0.01uF 100 V	02010	SA101C103KAAH
A5 C422	0160-6500	7	1	CAP 0.01uF 100 V	02010	SA101C103KAAH
A5 C424	0160-6623	5	1	CAP 0.1uF 50 V	02010	SA115C104MAAH
A5 C425	0160-5746	1	1	CAP 0.1uF 50 V	06121	B37987-T5104-M11
A5 C427	0160-6500	7	1	CAP 0.01uF 100 V	02010	SA101C103KAAH
A5 C428	0160-6500	7	1	CAP 0.01uF 100 V	02010	SA101C103KAAH
A5 C430	0160-6623	5	1	CAP 0.1uF 50 V	02010	SA115C104MAAH
A5 C431	0160-6623	5	1	CAP 0.1uF 50 V	02010	SA115C104MAAH
A5 C433	0160-6623	5	1	CAP 0.1uF 50 V	02010	SA115C104MAAH
A5 C435	0160-4535	4	1	CAP 1uF 50 V	02010	SR305C105KAAH
A5 C436	0160-6623	5	1	CAP 0.1uF 50 V	02010	SA115C104MAAH
A5 C440	0160-6623	5	1	CAP 0.1uF 50 V	02010	SA115C104MAAH
A5 C441	0160-5726	7	1	CAP 0.01uF 100 V	06121	B37987-J1103-M034
A5 C442	0160-6500	7	1	CAP 0.01uF 100 V	02010	SA101C103KAAH
A5 C443	0160-6500	7	1	CAP 0.01uF 100 V	02010	SA101C103KAAH
A5 C450	0160-6623	5	1	CAP 0.1uF 50 V	02010	SA115C104MAAH
A5 C460	0160-6623	5	1	CAP 0.1uF 50 V	02010	SA115C104MAAH
A5 C465	0160-6623	5	1	CAP 0.1uF 50 V	02010	SA115C104MAAH
A5 C470	0160-3872	0	1	CAP 2.2pF 200 V	06352	FD12C0G2D2R2C
A5 C471	0160-3872	0	1	CAP 2.2pF 200 V	06352	FD12C0G2D2R2C
A5 C500	0160-5746	1	1	CAP 0.1uF 50 V	06121	B37987-T5104-M11
A5 C501	0160-5746	1	1	CAP 0.1uF 50 V	06121	B37987-T5104-M11
A5 C503	0160-4535	4	1	CAP 1uF 50 V	02010	SR305C105KAAH
A5 C504	0160-5746	1	1	CAP 0.1uF 50 V	06121	B37987-T5104-M11
A5 C505	0160-6623	5	1	CAP 0.1uF 50 V	02010	SA115C104MAAH
A5 C506	0160-5726	7	1	CAP 0.01uF 100 V	06121	B37987-J1103-M034
A5 C511	0160-5726	7	1	CAP 0.01uF 100 V	06121	B37987-J1103-M034
A5 C512	0160-6500	7	1	CAP 0.01uF 100 V	02010	SA101C103KAAH
A5 C513	0160-6500	7	1	CAP 0.01uF 100 V	02010	SA101C103KAAH

Table C-7. 8131A Standard Timing Board Parts List (continued)

Reference	HP Part #	CD	Qty	Description	Manuf'r	Part #
A5 C514	0160-6623	5	1	CAP 0.1uF 50 V	02010	SA115C104MAAH
A5 C515	0160-6623	5	1	CAP 0.1uF 50 V	02010	SA115C104MAAH
A5 C517	0160-6623	5	1	CAP 0.1uF 50 V	02010	SA115C104MAAH
A5 C518	0160-6623	5	1	CAP 0.1uF 50 V	02010	SA115C104MAAH
A5 C520	0160-6623	5	1	CAP 0.1uF 50 V	02010	SA115C104MAAH
A5 C521	0160-6500	7	1	CAP 0.01uF 100 V	02010	SA101C103KAAH
A5 C522	0160-6500	7	1	CAP 0.01uF 100 V	02010	SA101C103KAAH
A5 C524	0160-6623	5	1	CAP 0.1uF 50 V	02010	SA115C104MAAH
A5 C525	0160-5746	1	1	CAP 0.1uF 50 V	06121	B37987-T5104-M11
A5 C527	0160-6500	7	1	CAP 0.01uF 100 V	02010	SA101C103KAAH
A5 C528	0160-6500	7	1	CAP 0.01uF 100 V	02010	SA101C103KAAH
A5 C530	0160-6623	5	1	CAP 0.1uF 50 V	02010	SA115C104MAAH
A5 C531	0160-6623	5	1	CAP 0.1uF 50 V	02010	SA115C104MAAH
A5 C533	0160-6623	5	1	CAP 0.1uF 50 V	02010	SA115C104MAAH
A5 C535	0160-4535	4	1	CAP 1uF 50 V	02010	SR305C105KAAH
A5 C536	0160-6623	5	1	CAP 0.1uF 50 V	02010	SA115C104MAAH
A5 C540	0160-6623	5	1	CAP 0.1uF 50 V	02010	SA115C104MAAH
A5 C541	0160-5726	7	1	CAP 0.01uF 100 V	06121	B37987-J1103-M034
A5 C542	0160-6500	7	1	CAP 0.01uF 100 V	02010	SA101C103KAAH
A5 C543	0160-6500	7	1	CAP 0.01uF 100 V	02010	SA101C103KAAH
A5 C550	0160-6623	5	1	CAP 0.1uF 50 V	02010	SA115C104MAAH
A5 C560	0160-6623	5	1	CAP 0.1uF 50 V	02010	SA115C104MAAH
A5 C565	0160-6623	5	1	CAP 0.1uF 50 V	02010	SA115C104MAAH
A5 C570	0160-3872	0	1	CAP 2.2pF 200 V	06352	FD12C0G2D2R2C
A5 C571	0160-3872	0	1	CAP 2.2pF 200 V	06352	FD12C0G2D2R2C
A5 CP100	0180-1974	1	1	CAP 10uF 35 V	04200	150D106X9035R2-DYS
A5 CP102	0180-0229	7	1	CAP 33uF 10 V	04200	150D336X9010B2-DYS
A5 CP104	0180-0229	7	1	CAP 33uF 10 V	04200	150D336X9010B2-DYS
A5 CP106	0180-0229	7	1	CAP 33uF 10 V	04200	150D336X9010B2-DYS
A5 CP108	0180-1974	1	1	CAP 10uF 35 V	04200	150D106X9035R2-DYS

Table C-7. 8131A Standard Timing Board Parts List (continued)

Reference	HP Part #	CD	Qty	Description	Manuf'r	Part #
A5 CP180	0180-0229	7	1	CAP 33uF 10 V	04200	150D336X9010B2-DYS
A5 CP200	0180-4129	4	1	CAP 1uF 35 V	04200	173D105X9035V
A5 CP201	0180-4129	4	1	CAP 1uF 35 V	04200	173D105X9035V
A5 CR102	1901-0535	9	1	DIO- SCHOTTKY SM	02062	50825511
A5 CR103	1901-0734	0	1	DIO-1N5818	02037	1N5818
A5 CR310	1901-1098	1	1	DIO-1N4150	00746	
A5 CR311	1901-1098	1	1	DIO-1N4150	00746	
A5 CR312	1901-1098	1	1	DIO-1N4150	00746	
A5 CR313	1901-1098	1	1	DIO-1N4150	00746	
A5 CR314	1901-1098	1	1	DIO-1N4150	00746	
A5 CR315	1901-1098	1	1	DIO-1N4150	00746	
A5 CR410	1901-1098	1	1	DIO-1N4150	00746	
A5 CR411	1901-1098	1	1	DIO-1N4150	00746	
A5 CR412	1901-1098	1	1	DIO-1N4150	00746	
A5 CR413	1901-1098	1	1	DIO-1N4150	00746	
A5 CR414	1901-1098	1	1	DIO-1N4150	00746	
A5 CR415	1901-1098	1	1	DIO-1N4150	00746	
A5 CR416	1901-0731	7	1	DIO-PWR RECT	02037	SR3010-3RL
A5 CR510	1901-1098	1	1	DIO-1N4150	00746	
A5 CR511	1901-1098	1	1	DIO-1N4150	00746	
A5 CR512	1901-1098	1	1	DIO-1N4150	00746	
A5 CR513	1901-1098	1	1	DIO-1N4150	00746	
A5 CR514	1901-1098	1	1	DIO-1N4150	00746	
A5 CR515	1901-1098	1	1	DIO-1N4150	00746	
A5 J100	1251-8324	1	1	CONN-POST-TP-HDR	04486	G06M96P4BEBL-004-715
A5 J101	1251-5380	3	1	CONN-POST-TP-HDR	02946	68000-602
A5 J102	1251-5380	3	1	CONN-POST-TP-HDR	02946	68000-602
A5 J200	1250-0543	8	1	CONN-RF SM-SNP	05769	51-053-0349-BE8
A5 J400	1251-5380	3	1	CONN-POST-TP-HDR	02946	68000-602
A5 K400	0490-1667	6	1	RLY 2C 12VDC	09809	RG2T-12V

Table C-7. 8131A Standard Timing Board Parts List (continued)

Reference	HP Part #	CD	Qty	Description	Manuf'r	Part #
A5 L100	9100-1788	6	1	CORE-FERRITE	02995	VK200 20/4B
A5 L101	9100-1788	6	1	CORE-FERRITE	02995	VK200 20/4B
A5 L102	9100-1788	6	1	CORE-FERRITE	02995	VK200 20/4B
A5 L103	9100-1788	6	1	CORE-FERRITE	02995	VK200 20/4B
A5 L104	9100-1788	6	1	CORE-FERRITE	02995	VK200 20/4B
A5 L110	9100-2891	4	1	L 50NH +-10%	03273	10M050K-1
A5 L111	9100-2891	4	1	L 50NH +-10%	03273	10M050K-1
A5 L112	9100-2891	4	1	L 50NH +-10%	03273	10M050K-1
A5 L300*	9100-2891	4	1	L 50NH +-10%	03273	10M050K-1
A5 L400	9100-2891	4		L 50NH +-10%	03273	10M050K-1
A5 L400	8159-0005	0	1	RES-ZERO OHMS	01339	L-2007-1
A5 L500	9100-2891	4	1	L 50NH +-10%	03273	10M050K-1
A5 MP130	1400-1437	0	3	CLAMP-CABLE	11808	
A5 MP134	1400-0082	9	1	CLMP-CA	02414	HP-2N
A5 MP136	3050-0891	7	1	WASHER-FL MTLC 3	06691	
A5 MP201	54100-29104	5	1	SPRING	28480	54100-29104
A5 MP202	54100-29101	2	1	CLAMP	28480	54100-29101
A5 MP209	54100-21103	8	1	SPRING	28480	54100-21103
A5 MP230	0380-1731	2	4	SPCR-PRS-IN	03981	YC3-4564
A5 MP240	0515-0659	8	4	SCR-MACHINE	05610	
A5 MP300	1200-1468	3	1	SOCKET RGA72 CN	10803	1KS072-33TT
A5 MP301	1200-1410	5	1	SOCKET PGA 72PI	10803	1KS072-33TG
A5 MP400	1200-1468	3	1	SOCKET RGA72 CN	10803	1KS072-33TT
A5 MP401	1200-1410	5	1	SOCKET RGA 72PI	10803	1KS072-33TG
A5 MP500	1200-1468	3	1	SOCKET PGA72 CN	10803	1KS072-33TT
A5 MP501	1200-1410	5	1	SOCKET RGA72 PI	10803	1KS072-33TG
A5 Q200	1853-0563	0	1	XSTR PNP SI	02037	2N3906(SEL)
A5 Q310	1854-1028	6	1	XSTR NPN SI	02037	2N3904
A5 Q312	1855-0309	6	1	MOSFET 2N4352 P-	02037	2N4352
A5 Q313	1855-0309	6	1	MOSFET 2N4352 P-	02037	2N4352

Table C-7. 8131A Standard Timing Board Parts List (continued)

Reference	HP Part #	CD	Qty	Description	Manuf'r	Part #
A5 Q314	1853-0569	6	1	XSTR PNP SI	02037	
A5 Q315	1854-0392	5	1	XSTR NPN SI	02037	2N5088
A5 Q316	1853-0569	6	1	XSTR PNP SI	02037	
A5 Q317	1854-0392	5	1	XSTR NPN SI	02037	2N5088
A5 Q318	1854-0392	5	1	XSTR NPN SI	02037	2N5088
A5 Q319	1853-0569	6	1	XSTR PNP SI	02037	
A5 Q410	1854-1028	6	1	XSTR NPN SI	02037	2N3904
A5 Q412	1855-0309	6	1	MOSFET 2N4352 P-	02037	2N4352
A5 Q413	1853-0569	6	1	XSTR PNP SI	02037	
A5 Q414	1853-0569	6	1	XSTR PNP SI	02037	
A5 Q415	1854-0392	5	1	XSTR NPN SI	02037	2N5088
A5 Q416	1853-0569	6	1	XSTR PNP SI	02037	
A5 Q417	1854-0392	5	1	XSTR NPN SI	02037	2N5088
A5 Q418	1854-0392	5	1	XSTR NPN SI	02037	2N5088
A5 Q419	1853-0569	6	1	XSTR PNP SI	02037	
A5 Q480	1854-0472	2	1	XSTR NPN SI DARL	02037	MPS-A14
A5 Q510	1854-1028	6	1	XSTR NPN SI	02037	2N3904
A5 Q512	1855-0309	6	1	MOSFET 2N4352 P-	02037	2N4352
A5 Q513	1853-0569	6	1	XSTR PNP SI	02037	
A5 Q514	1853-0569	6	1	XSTR PNP SI	02037	
A5 Q515	1854-0392	5	1	XSTR NPN SI	02037	2N5088
A5 Q516	1853-0569	6	1	XSTR PNP SI	02037	
A5 Q517	1854-0392	5	1	XSTR NPN SI	02037	2N5088
A5 Q518	1854-0392	5	1	XSTR NPN SI	02037	2N5088
A5 Q519	1853-0569	6	1	XSTR PNP SI	02037	
A5 R100	0757-0442	9	1	RES 10K 1% .125W	00746	CRB14 OR CRB25
A5 R200	0699-1206	1	1	RES 127 1% 2W MO	02499	GS-3
A5 R201	0699-1206	1	1	RES 127 1% 2W MO	02499	GS-3
A5 R202	0698-4855	0	1	RES 267 1% .5W T	01074	H2
A5 R204	0698-7205	0	1	RES 51.1 1% .05W	00746	CRB20

Table C-7. 8131A Standard Timing Board Parts List (continued)

Reference	HP Part #	CD	Qty	Description	Manuf'r	Part #
A5 R205	0757-0180	2	1	RES 31.6 1% .125	00746	CRB14 OR CRB25
A5 R206	0698-3162	0	1	RES 46.4K 1% .12	00746	CRB14 OR CRB25
A5 R208	0698-6347	9	1	RES 1.5K .1% .12	00746	CRB14 OR CRB25
A5 R209	0757-1094	9	1	RES 1.47K 1% .12	00746	CRB14 OR CRB25
A5 R210	0698-6963	5	1	RES 5.55K .1% .1	00746	CRB14 OR CRB25
A5 R211	0698-6963	5	1	RES 5.55K .1% .1	00746	CRB14 OR CRB25
A5 R212	0757-0394	0	1	RES 51.1 1% .125	00746	CRB14 OR CRB25
A5 R220	0757-0421	4	1	RES 825 1% .125W	00746	CRB14 OR CRB25
A5 R221	0698-3132	4	1	RES 261 1% .125W	00746	CRB14 OR CRB25
A5 R300	0757-0442	9	1	RES 10K 1% .125W	00746	CRB14 OR CRB25
A5 R301	0757-0394	0	1	RES 51.1 1% .125	00746	CRB14 OR CRB25
A5 R302	0698-4425	0	1	RES 1.54K 1% .12	00746	CRB14 OR CRB25
A5 R303	0757-0317	7	1	RES 1.33K 1% .12	00746	CRB14 OR CRB25
A5 R304	0757-0280	3	1	RES 1K 1% .125W	00746	CRB14 OR CRB25
A5 R305	0757-0394	0	1	RES 51.1 1% .125	00746	CRB14 OR CRB25
A5 R306	0757-0394	0	1	RES 51.1 1% .125	00746	CRB14 OR CRB25
A5 R307	0698-3132	4	1	RES 261 1% .125W	00746	CRB14 OR CRB25
A5 R309	0757-0394	0	1	RES 51.1 1% .125	00746	CRB14 OR CRB25
A5 R310	0757-0279	0	1	RES 3.16K 1% .12	00746	CRB14 OR CRB25
A5 R311	0698-6360	6	1	RES 10K .1% .125	00746	CRB14 OR CRB25
A5 R312	0699-1100	4	1	RES 6.984K .1% .	01074	H8
A5 R313	0698-3153	9	1	RES 3.83K 1% .12	00746	CRB14 OR CRB25
A5 R314	0757-0449	6	1	RES 20K 1% .125W	00746	CRB14 OR CRB25
A5 R315	0757-0449	6	1	RES 20K 1% .125W	00746	CRB14 OR CRB25
A5 R319	0757-0280	3	1	RES 1K 1% .125W	00746	CRB14 OR CRB25
A5 R320	0757-0279	0	1	RES 3.16K 1% .12	00746	CRB14 OR CRB25
A5 R321	0757-0279	0	1	RES 3.16K 1% .12	00746	CRB14 OR CRB25
A5 R322	0757-0317	7	1	RES 1.33K 1% .12	00746	CRB14 OR CRB25
A5 R323	0698-3154	0	1	RES 4.22K 1% .12	00746	CRB14 OR CRB25
A5 R324	0698-0085	0	1	RES 2.61K 1% .12	00746	CRB14 OR CRB25

Table C-7. 8131A Standard Timing Board Parts List (continued)

Reference	HP Part #	CD	Qty	Description	Manuf'r	Part #
A5 R325	0698-0085	0	1	RES 2.61K 1% .12	00746	CRB14 OR CRB25
A5 R326	0757-0419	0	1	RES 681 1% .125W	00746	CRB14 OR CRB25
A5 R327	0757-0394	0	1	RES 51.1 1% .125	00746	CRB14 OR CRB25
A5 R328	0757-0394	0	1	RES 51.1 1% .125	00746	CRB14 OR CRB25
A5 R329	0757-0419	0	1	RES 681 1% .125W	00746	CRB14 OR CRB25
A5 R330	0698-6347	9	1	RES 1.5K .1% .12	00746	CRB14 OR CRB25
A5 R331	0698-6348	0	1	RES 3K .1% .125W	00746	CRB14 OR CRB25
A5 R333	0698-6347	9	1	RES 1.5K .1% .12	00746	CRB14 OR CRB25
A5 R334	0757-0279	0	1	RES 3.16K 1% .12	00746	CRB14 OR CRB25
A5 R335	0698-3438	3	1	RES 147 1% .125W	00746	CRB14 OR CRB25
A5 R336	0757-0394	0	1	RES 51.1 1% .125	00746	CRB14 OR CRB25
A5 R337	0757-0279	0	1	RES 3.16K 1% .12	00746	CRB14 OR CRB25
A5 R338	0757-0349	5	1	RES 22.6K 1% .12	00746	CRB14 OR CRB25
A5 R339	0757-0477	0	1	RES 332K 1% .125	00746	CRB14 OR CRB25
A5 R340	0757-0279	0	1	RES 3.16K 1% .12	00746	CRB14 OR CRB25
A5 R341	0698-3155	1	1	RES 4.64K 1% .12	00746	CRB14 OR CRB25
A5 R342	0698-3446	3	1	RES 383 1% .125W	00746	CRB14 OR CRB25
A5 R343	0698-3158	4	1	RES 23.7K 1% .12	00746	CRB14 OR CRB25
A5 R344	0698-3268	7	1	RES 11.5K 1% .12	00746	CRB14 OR CRB25
A5 R345	0698-3136	8	1	RES 17.8K 1% .12	00746	CRB14 OR CRB25
A5 R346	0698-0085	0	1	RES 2.61K 1% .12	00746	CRB14 OR CRB25
A5 R347	0757-0280	3	1	RES 1K 1% .125W	00746	CRB14 OR CRB25
A5 R348	0698-3438	3	1	RES 147 1% .125W	00746	CRB14 OR CRB25
A5 R350	0757-0442	9	1	RES 10K 1% .125W	00746	CRB14 OR CRB25
A5 R351	0698-3460	1	1	RES 422K 1% .125	00746	CRB14 OR CRB25
A5 R362	0757-0394	0	1	RES 51.1 1% .125	00746	CRB14 OR CRB25
A5 R367	8159-0005	0	1	RES-ZERO OHMS	01339	L-2007-1
A5 R370	0698-3161	9	1	RES 38.3K 1% .12	00746	CRB14 OR CRB25
A5 R371	0757-0280	3	1	RES 1K 1% .125W	00746	CRB14 OR CRB25
A5 R373	0698-3446	3	1	RES 383 1% .125W	00746	CRB14 OR CRB25

Table C-7. 8131A Standard Timing Board Parts List (continued)

Reference	HP Part #	CD	Qty	Description	Manuf'r	Part #
A5 R375	0698-3159	5	1	RES 26.1K 1% .12	00746	CRB14 OR CRB25
A5 R376	0757-0283	6	1	RES 2K 1% .125W	00746	CRB14 OR CRB25
A5 R377	0757-0283	6	1	RES 2K 1% .125W	00746	CRB14 OR CRB25
A5 R378	0757-0283	6	1	RES 2K 1% .125W	00746	CRB14 OR CRB25
A5 R379	0757-0283	6	1	RES 2K 1% .125W	00746	CRB14 OR CRB25
A5 R381	0757-0283	6	1	RES 2K 1% .125W	00746	CRB14 OR CRB25
A5 R390	0757-0283	6	1	RES 2K 1% .125W	00746	CRB14 OR CRB25
A5 R391	0757-0283	6	1	RES 2K 1% .125W	00746	CRB14 OR CRB25
A5 R392	0757-0283	6	1	RES 2K 1% .125W	00746	CRB14 OR CRB25
A5 R394	0757-0283	6	1	RES 2K 1% .125W	00746	CRB14 OR CRB25
A5 R396	0757-0283	6	1	RES 2K 1% .125W	00746	CRB14 OR CRB25
A5 R400	0757-0442	9	1	RES 10K 1% .125W	00746	CRB14 OR CRB25
A5 R401	0757-0394	0	1	RES 51.1 1% .125	00746	CRB14 OR CRB25
A5 R402	0698-4425	0	1	RES 1.54K 1% .12	00746	CRB14 OR CRB25
A5 R403	0698-4422	7	1	RES 1.27K 1% .12	00746	CRB14 OR CRB25
A5 R404	0757-0280	3	1	RES 1K 1% .125W	00746	CRB14 OR CRB25
A5 R405	0757-0394	0	1	RES 51.1 1% .125	00746	CRB14 OR CRB25
A5 R406	0698-3438	3	1	RES 147 1% .125W	00746	CRB14 OR CRB25
A5 R409	0757-0394	0	1	RES 51.1 1% .125	00746	CRB14 OR CRB25
A5 R410	0757-0279	0	1	RES 3.16K 1% .12	00746	CRB14 OR CRB25
A5 R411	0698-6360	6	1	RES 10K .1% .125	00746	CRB14 OR CRB25
A5 R412	0699-1011	6	1	RES 3.32K .1% .1	00746	CRB14 OR CRB25
A5 R413	0698-3153	9	1	RES 3.83K 1% .12	00746	CRB14 OR CRB25
A5 R414	0757-0449	6	1	RES 20K 1% .125W	00746	CRB14 OR CRB25
A5 R415	0757-0449	6	1	RES 20K 1% .125W	00746	CRB14 OR CRB25
A5 R419	0757-0280	3	1	RES 1K 1% .125W	00746	CRB14 OR CRB25
A5 R420	0757-0279	0	1	RES 3.16K 1% .12	00746	CRB14 OR CRB25
A5 R421	0757-0279	0	1	RES 3.16K 1% .12	00746	CRB14 OR CRB25
A5 R422	0757-0424	7	1	RES 1.1K 1% .125	00746	CRB14 OR CRB25
A5 R423	0757-0279	0	1	RES 3.16K 1% .12	00746	CRB14 OR CRB25

Table C-7. 8131A Standard Timing Board Parts List (continued)

Reference	HP Part #	CD	Qty	Description	Manuf'r	Part #
A5 R424	0698-0085	0	1	RES 2.61K 1% .12	00746	CRB14 OR CRB25
A5 R425	0757-0278	9	1	RES 1.78K 1% .12	00746	CRB14 OR CRB25
A5 R426	0757-0280	3	1	RES 1K 1% .125W	00746	CRB14 OR CRB25
A5 R427	0757-0394	0	1	RES 51.1 1% .125	00746	CRB14 OR CRB25
A5 R428	0757-0394	0	1	RES 51.1 1% .125	00746	CRB14 OR CRB25
A5 R429	0757-0419	0	1	RES 681 1% .125W	00746	CRB14 OR CRB25
A5 R430	0698-6347	9	1	RES 1.5K .1% .12	00746	CRB14 OR CRB25
A5 R431	0698-6348	0	1	RES 3K .1% .125W	00746	CRB14 OR CRB25
A5 R433	0698-6347	9	1	RES 1.5K .1% .12	00746	CRB14 OR CRB25
A5 R434	0698-6616	5	1	RES 750 .1% .125	00746	CRB14 OR CRB25
A5 R435	0698-3438	3	1	RES 147 1% .125W	00746	CRB14 OR CRB25
A5 R436	0757-0394	0	1	RES 51.1 1% .125	00746	CRB14 OR CRB25
A5 R437	0698-6616	5	1	RES 750 .1% .125	00746	CRB14 OR CRB25
A5 R438	0757-0465	6		RES 100K 1% .125	00746	CRB14 OR CRB25
A5 R438*	0757-0463	4	1	RES 82.5K 1% .12	00746	CRB14 OR CRB25
A5 R440	0757-0279	0	1	RES 3.16K 1% .12	00746	CRB14 OR CRB25
A5 R441	0698-3155	1	1	RES 4.64K 1% .12	00746	CRB14 OR CRB25
A5 R442	0698-3446	3	1	RES 383 1% .125W	00746	CRB14 OR CRB25
A5 R443	0757-0462	3	1	RES 75K 1% .125W	00746	CRB14 OR CRB25
A5 R444	0698-3268	7	1	RES 11.5K 1% .12	00746	CRB14 OR CRB25
A5 R445	0698-3136	8	1	RES 17.8K 1% .12	00746	CRB14 OR CRB25
A5 R446	0698-0085	0	1	RES 2.61K 1% .12	00746	CRB14 OR CRB25
A5 R447	0757-0280	3	1	RES 1K 1% .125W	00746	CRB14 OR CRB25
A5 R448	0698-3438	3	1	RES 147 1% .125W	00746	CRB14 OR CRB25
A5 R450	0757-0442	9	1	RES 10K 1% .125W	00746	CRB14 OR CRB25
A5 R453	0757-0462	3		RES 75K 1% .125W	00746	CRB14 OR CRB25
A5 R453*	0698-3243	8	1	RES 178K 1% .125	00746	CRB14 OR CRB25
A5 R460	0757-0394	0	1	RES 51.1 1% .125	00746	CRB14 OR CRB25
A5 R461	0757-0394	0	1	RES 51.1 1% .125	00746	CRB14 OR CRB25
A5 R462	0757-0394	0	1	RES 51.1 1% .125	00746	CRB14 OR CRB25

Table C-7. 8131A Standard Timing Board Parts List (continued)

Reference	HP Part #	CD	Qty	Description	Manuf'r	Part #
A5 R467	8159-0005	0	1	RES-ZERO OHMS	01339	L-2007-1
A5 R470	0698-3158	4	1	RES 23.7K 1% .12	00746	CRB14 OR CRB25
A5 R471	0757-0280	3	1	RES 1K 1% .125W	00746	CRB14 OR CRB25
A5 R473	0698-3446	3	1	RES 383 1% .125W	00746	CRB14 OR CRB25
A5 R475	0698-3159	5	1	RES 26.1K 1% .12	00746	CRB14 OR CRB25
A5 R476	0757-0283	6	1	RES 2K 1% .125W	00746	CRB14 OR CRB25
A5 R477	0757-0283	6	1	RES 2K 1% .125W	00746	CRB14 OR CRB25
A5 R479	0757-0283	6	1	RES 2K 1% .125W	00746	CRB14 OR CRB25
A5 R480	0757-0283	6	1	RES 2K 1% .125W	00746	CRB14 OR CRB25
A5 R481	0757-0283	6	1	RES 2K 1% .125W	00746	CRB14 OR CRB25
A5 R486	0757-0465	6	1	RES 100K 1% .125	00746	CRB14 OR CRB25
A5 R490	0757-0283	6	1	RES 2K 1% .125W	00746	CRB14 OR CRB25
A5 R491	0757-0283	6	1	RES 2K 1% .125W	00746	CRB14 OR CRB25
A5 R492	0757-0283	6	1	RES 2K 1% .125W	00746	CRB14 OR CRB25
A5 R494	0757-0283	6	1	RES 2K 1% .125W	00746	CRB14 OR CRB25
A5 R496	0757-0283	6	1	RES 2K 1% .125W	00746	CRB14 OR CRB25
A5 R501	0757-0394	0	1	RES 51.1 1% .125	00746	CRB14 OR CRB25
A5 R502	0698-4425	0	1	RES 1.54K 1% .12	00746	CRB14 OR CRB25
A5 R503	0757-0422	5	1	RES 909 1% .125W	00746	CRB14 OR CRB25
A5 R504	0757-0280	3	1	RES 1K 1% .125W	00746	CRB14 OR CRB25
A5 R505	0757-0394	0	1	RES 51.1 1% .125	00746	CRB14 OR CRB25
A5 R506	0698-3438	3	1	RES 147 1% .125W	00746	CRB14 OR CRB25
A5 R509	0757-0394	0	1	RES 51.1 1% .125	00746	CRB14 OR CRB25
A5 R510	0757-0279	0	1	RES 3.16K 1% .12	00746	CRB14 OR CRB25
A5 R511	0698-6360	6	1	RES 10K .1% .125	00746	CRB14 OR CRB25
A5 R512	0699-1011	6	1	RES 3.32K .1% .1	00746	CRB14 OR CRB25
A5 R513	0698-3153	9	1	RES 3.83K 1% .12	00746	CRB14 OR CRB25
A5 R514	0757-0449	6	1	RES 20K 1% .125W	00746	CRB14 OR CRB25
A5 R515	0757-0449	6	1	RES 20K 1% .125W	00746	CRB14 OR CRB25
A5 R519	0757-0280	3	1	RES 1K 1% .125W	00746	CRB14 OR CRB25

Table C-7. 8131A Standard Timing Board Parts List (continued)

Reference	HP Part #	CD	Qty	Description	Manuf'r	Part #
A5 R520	0757-0279	0	1	RES 3.16K 1% .12	00746	CRB14 OR CRB25
A5 R521	0757-0279	0	1	RES 3.16K 1% .12	00746	CRB14 OR CRB25
A5 R522	0757-0317	7	1	RES 1.33K 1% .12	00746	CRB14 OR CRB25
A5 R523	0698-0084	9	1	RES 2.15K 1% .12	00746	CRB14 OR CRB25
A5 R524	0698-0085	0	1	RES 2.61K 1% .12	00746	CRB14 OR CRB25
A5 R525	0757-0278	9	1	RES 1.78K 1% .12	00746	CRB14 OR CRB25
A5 R526	0757-0280	3	1	RES 1K 1% .125W	00746	CRB14 OR CRB25
A5 R527	0757-0394	0	1	RES 51.1 1% .125	00746	CRB14 OR CRB25
A5 R528	0757-0394	0	1	RES 51.1 1% .125	00746	CRB14 OR CRB25
A5 R529	0757-0419	0	1	RES 681 1% .125W	00746	CRB14 OR CRB25
A5 R530	0698-6347	9	1	RES 1.5K .1% .12	00746	CRB14 OR CRB25
A5 R531	0698-6348	0	1	RES 3K .1% .125W	00746	CRB14 OR CRB25
A5 R533	0698-6347	9	1	RES 1.5K .1% .12	00746	CRB14 OR CRB25
A5 R534	0698-6616	5	1	RES 750 .1% .125	00746	CRB14 OR CRB25
A5 R535	0698-3438	3	1	RES 147 1% .125W	00746	CRB14 OR CRB25
A5 R536	0757-0394	0	1	RES 51.1 1% .125	00746	CRB14 OR CRB25
A5 R537	0698-6616	5	1	RES 750 .1% .125	00746	CRB14 OR CRB25
A5 R538	0757-0978	6	1	RES 95.3K 1% .12	00746	CRB14 OR CRB25
A5 R539	0698-3260	9	1	RES 464K 1% .125	00746	CRB14 OR CRB25
A5 R540	0757-0279	0	1	RES 3.16K 1% .12	00746	CRB14 OR CRB25
A5 R541	0698-3155	1	1	RES 4.64K 1% .12	00746	CRB14 OR CRB25
A5 R542	0698-3446	3	1	RES 383 1% .125W	00746	CRB14 OR CRB25
A5 R543	0757-0464	5	1	RES 90.9K 1% .12	00746	CRB14 OR CRB25
A5 R544	0698-3268	7	1	RES 11.5K 1% .12	00746	CRB14 OR CRB25
A5 R545	0698-3136	8	1	RES 17.8K 1% .12	00746	CRB14 OR CRB25
A5 R546	0698-0085	0	1	RES 2.61K 1% .12	00746	CRB14 OR CRB25
A5 R547	0757-0280	3	1	RES 1K 1% .125W	00746	CRB14 OR CRB25
A5 R548	0698-3438	3	1	RES 147 1% .125W	00746	CRB14 OR CRB25
A5 R550	0757-0442	9	1	RES 10K 1% .125W	00746	CRB14 OR CRB25
A5 R551	0698-8961	7	1	RES 909K 1% .125	00746	CRB14 OR CRB25

Table C-7. 8131A Standard Timing Board Parts List (continued)

Reference	HP Part #	CD	Qty	Description	Manuf'r	Part #
A5 R560	0757-0394	0	1	RES 51.1 1% .125	00746	CRB14 OR CRB25
A5 R567	8159-0005	0	1	RES-ZERO OHMS	01339	L-2007-1
A5 R570	0757-0449	6	1	RES 20K 1% .125W	00746	CRB14 OR CRB25
A5 R571	0757-0280	3	1	RES 1K 1% .125W	00746	CRB14 OR CRB25
A5 R573	0698-3446	3	1	RES 383 1% .125W	00746	CRB14 OR CRB25
A5 R575	0698-3159	5	1	RES 26.1K 1% .12	00746	CRB14 OR CRB25
A5 R576	0757-0283	6	1	RES 2K 1% .125W	00746	CRB14 OR CRB25
A5 R577	0757-0283	6	1	RES 2K 1% .125W	00746	CRB14 OR CRB25
A5 R579	0757-0283	6	1	RES 2K 1% .125W	00746	CRB14 OR CRB25
A5 R580	0757-0283	6	1	RES 2K 1% .125W	00746	CRB14 OR CRB25
A5 R581	0757-0283	6	1	RES 2K 1% .125W	00746	CRB14 OR CRB25
A5 R590	0757-0283	6	1	RES 2K 1% .125W	00746	CRB14 OR CRB25
A5 R591	0757-0283	6	1	RES 2K 1% .125W	00746	CRB14 OR CRB25
A5 R592	0757-0283	6	1	RES 2K 1% .125W	00746	CRB14 OR CRB25
A5 R594	0757-0283	6	1	RES 2K 1% .125W	00746	CRB14 OR CRB25
A5 R596	0757-0283	6	1	RES 2K 1% .125W	00746	CRB14 OR CRB25
A5 RA100	1810-0316	1	1	NETWORK-RES DIP	02483	761-3-R10K
A5 RT393	0837-0035	6	1	THERMISTOR DISC	05098	35D24
A5 RT493	0837-0035	6	1	THERMISTOR DISC	05098	35D24
A5 RT593	0837-0035	6	1	THERMISTOR DISC	05098	35D24
A5 TP200	0360-2264	6	1	TERM.-TEST POINT	10358	1095D
A5 TP311	0360-2264	6	1	TERM.-TEST POINT	10358	1095D
A5 TP312	0360-2264	6	1	TERM.-TEST POINT	10358	1095D
A5 TP323	0360-2264	6	1	TERM.-TEST POINT	10358	1095D
A5 TP324	0360-2264	6	1	TERM.-TEST POINT	10358	1095D
A5 TP411	0360-2264	6	1	TERM.-TEST POINT	10358	1095D
A5 TP423	0360-2264	6	1	TERM.-TEST POINT	10358	1095D
A5 TP424	0360-2264	6	1	TERM.-TEST POINT	10358	1095D
A5 TP511	0360-2264	6	1	TERM.-TEST POINT	10358	1095D
A5 TP512	0360-2264	6	1	TERM.-TEST POINT	10358	1095D

Table C-7. 8131A Standard Timing Board Parts List (continued)

Reference	HP Part #	CD	Qty	Description	Manuf'r	Part #
A5 TP523	0360-2264	6	1	TERM.-TEST POINT	10358	1095D
A5 TP524	0360-2264	6	1	TERM.-TEST POINT	10358	1095D
A5 U100	1820-3665	0	1	IC-MM74HCT245N	01698	SN74HCT245N
A5 U101	1820-3847	0	1	IC-MM74HCT138N	01698	SN74HCT138N
A5 U102	1820-3082	5	1	IC-MC74HC374N	01698	SN74HC374N
A5 U103	1820-3082	5	1	IC-MC74HC374N	01698	SN74HC374N
A5 U104	1820-3847	0	1	IC-MM74HCT138N	01698	SN74HCT138N
A5 U105	1820-3082	5	1	IC-MC74HC374N	01698	SN74HC374N
A5 U106	1820-3082	5	1	IC-MC74HC374N	01698	SN74HC374N
A5 U107	1820-3847	0	1	IC-MM74HCT138N	01698	SN74HCT138N
A5 U108	1820-3082	5	1	IC-MC74HC374N	01698	SN74HC374N
A5 U109	1820-3847	0	1	IC-MM74HCT138N	01698	SN74HCT138N
A5 U110	1820-3082	5	1	IC-MC74HC374N	01698	SN74HC374N
A5 U111	1820-3082	5	1	IC-MC74HC374N	01698	SN74HC374N
A5 U112	1818-3164	9	1	IC X2816BP	10572	X2816BP
A5 U200	1NB7-8008	1	1	SYNC COMP HYBRID	28480	1NB7-8008
A5 U201	1826-0544	0	1	IC-V RGLTR	02037	
A5 U202	1820-3082	5	1	IC-MC74HC374N	01698	SN74HC374N
A5 U203	1826-0550	8	1	D/A 8-BIT	02910	DAC08EN
A5 U204	1820-0493	6	1	IC 307	03406	LM307N
A5 U300	1DP9-0002	0	1	IC T1671	28480	1DP9-0002
A5 U301	1DP6-0001	3	1	IC COUNTER 200M	28480	1DP6-0001
A5 U303	1820-4995	1	1	IC-TC74HC592P	06354	TC74HC592P
A5 U304	1820-4995	1	1	IC-TC74HC592P	06354	TC74HC592P
A5 U305	1820-5067	0	1	IC-74AC74PC	03406	74AC74PC
A5 U306	1820-5067	0	1	IC-74AC74PC	03406	74AC74PC
A5 U307	1820-3298	5	1	IC-MM74HC32N	02037	MC74HC32N
A5 U310	1826-1553	3	1	IC 1014	10858	LT1014DN
A5 U311	1826-0774	8	1	IC LM385BZ-1.2	03406	LM385BZ-1.2
A5 U312	1826-1341	7	1	D/A 12-DGT	03406	DAC1232LCD

Table C-7. 8131A Standard Timing Board Parts List (continued)

Reference	HP Part #	CD	Qty	Description	Manuf'r	Part #
A5 U313	1826-1409	8	1	IC 1013	10858	LT1013CN8
A5 U314	1826-0315	3	1	IC 348	03406	LM348N
A5 U318	1826-0916	0	1	ANLG SW AD7511DI	03285	AD7511DIKN
A5 U400	1DP9-0001	9	1	IC TIMG GEN 500M	28480	1DP9-0001
A5 U401	1DP6-0001	3	1	IC COUNTER 200M	28480	1DP6-0001
A5 U410	1826-1553	3	1	IC 1014	10858	LT1014DN
A5 U411	1826-0774	8	1	IC LM385BZ-1.2	03406	LM385BZ-1.2
A5 U412	1826-1341	7	1	D/A 12-DGT	03406	DAC1232LCD
A5 U413	1826-1409	8	1	IC 1013	10858	LT1013CN8
A5 U414	1826-0315	3	1	IC 348	03406	LM348N
A5 U418	1826-0916	0	1	ANLG SW AD7511DI	03285	AD7511DIKN
A5 U500	1DP9-0001	9	1	IC TIMG GEN 500M	28480	1DP9-0001
A5 U501	1DP6-0001	3	1	IC COUNTER 200M	28480	1DP6-0001
A5 U510	1826-1553	3	1	IC 1014	10858	LT1014DN
A5 U511	1826-0774	8	1	IC LM385BZ-1.2	03406	LM385BZ-1.2
A5 U512	1826-1341	7	1	D/A 12-DGT	03406	DAC1232LCD
A5 U513	1826-1409	8	1	IC 1013	10858	LT1013CN8
A5 U514	1826-0315	3	1	IC 348	03406	LM348N
A5 U518	1826-0916	0	1	ANLG SW AD7511DI	03285	AD7511DIKN
A5 VR300	1902-0955	9	1	DIO-ZNR 7.5V 5%	02037	
A5 VR400	1902-0955	9	1	DIO-ZNR 7.5V 5%	02037	
A5 VR500	1902-0955	9	1	DIO-ZNR 7.5V 5%	02037	
A5 W100	1258-0141	8	1	JUMPER-REM	01380	530153-2
A5 W300	08131-61650	4	1	CBL AY PC 15CM	28480	08131-61650
A5 W301	08131-61655	9	1	CBL AY TROUT45C	28480	08131-61655
A5 W400	08131-61672	0	1	CBL SET DELAY A	28480	08131-61672
A5 W500	08131-61670	8	1	CBL SET OUT30-5	28480	08131-61670

Main Power Board

Table C-8. 8131A Main Power Board Parts List

Reference	HP Part #	CD	Qty	Description	Manuf'r	Part #
A14	08131-66514	9	1	BD AY PWR MAIN	28480	08131-66514
A14C118	0180-3651	5	1	CAP 100uF 50 V	00493	KM50VB101M
A14C119	0180-3651	5	1	CAP 100uF 50 V	00493	KM50VB101M
A14C121	0160-6623	5	1	CAP 0.1uF 50 V	02010	SA115C104MAAH
A14C122	0160-6623	5	1	CAP 0.1uF 50 V	02010	SA115C104MAAH
A14C123	0160-6623	5	1	CAP 0.1uF 50 V	02010	SA115C104MAAH
A14CP101	0180-3411	5	1	CAP 25 V	08709	ECET 25R 153SW
A14CP102	0180-3411	5	1	CAP 25 V	08709	ECET 25R 153SW
A14CP103	0180-4049	7	1	CAP 16 V	00493	KME16VNSN27000M30X50
A14CP104	0180-4049	7	1	CAP 16 V	00493	KME16VNSN27000M30X50
A14CP105	0180-4050	0	1	CAP 10 V	00493	KME10VNSN39000M30X50
A14CP106	0180-4050	0	1	CAP 10 V	00493	KME10VNSN39000M30X50
A14CP107	0180-4049	7	1	CAP 16 V	00493	KME16VNSN27000M30X50
A14CP108	0180-4049	7	1	CAP 16 V	00493	KME16VNSN27000M30X50
A14CP109	0180-3411	5	1	CAP 25 V	08709	ECET 25R 153SW
A14CP110	0180-3411	5	1	CAP 25 V	08709	ECET 25R 153SW
A14CP111	0180-3006	4	1	CAP 35 V	00493	NM35VB10000Q
A14CP112	0180-3006	4	1	CAP 35 V	00493	NM35VB10000Q
A14CP113	0180-3469	3	1	CAP 100uF 25 V	00493	KMC25VB101M8X11LL
A14CP114	0180-3469	3	1	CAP 100uF 25 V	00493	KMC25VB101M8X11LL
A14CP115	0180-3469	3	1	CAP 100uF 25 V	00493	KMC25VB101M8X11LL
A14CP116	0180-3469	3	1	CAP 100uF 25 V	00493	KMC25VB101M8X11LL
A14CP117	0180-3469	3	1	CAP 100uF 25 V	00493	KMC25VB101M8X11LL

Table C-8. 8131A Main Power Board Parts List (continued)

Reference	HP Part #	CD	Qty	Description	Manuf'r	Part #
A14CP120	0180-2690	0	1	CAP 3.3uF 15 V	04200	150D335X9015A2
A14CR101	1901-1267	6	1	DIO-PWR RECT	03038	50SQ080
A14CR102	1901-1267	6	1	DIO-PWR RECT	03038	50SQ080
A14CR103	1901-1267	6	1	DIO-PWR RECT	03038	50SQ080
A14CR104	1901-1267	6	1	DIO-PWR RECT	03038	50SQ080
A14CR105	1906-0265	2	1	DIO-CT-RECT 45V	03038	12CTQ045
A14CR106	1906-0265	2	1	DIO-CT-RECT 45V	03038	12CTQ045
A14CR107	1901-0935	3	1	DIO-PWR RECT	03038	
A14CR108	1901-0935	3	1	DIO-PWR RECT	03038	
A14CR109	1901-0935	3	1	DIO-PWR RECT	03038	
A14CR110	1901-0935	3	1	DIO-PWR RECT	03038	
A14CR111	1901-0935	3	1	DIO-PWR RECT	03038	
A14CR112	1901-0935	3	1	DIO-PWR RECT	03038	
A14CR113	1901-0935	3	1	DIO-PWR RECT	03038	
A14CR114	1901-0935	3	1	DIO-PWR RECT	03038	
A14CR115	1901-1267	6	1	DIO-PWR RECT	03038	50SQ080
A14CR116	1901-1267	6	1	DIO-PWR RECT	03038	50SQ080
A14CR117	1901-1267	6	1	DIO-PWR RECT	03038	50SQ080
A14CR118	1901-1267	6	1	DIO-PWR RECT	03038	50SQ080
A14CR119	1901-1267	6	1	DIO-PWR RECT	03038	50SQ080
A14CR120	1901-1267	6	1	DIO-PWR RECT	03038	50SQ080
A14CR121	1901-1267	6	1	DIO-PWR RECT	03038	50SQ080
A14CR122	1901-1267	6	1	DIO-PWR RECT	03038	50SQ080
A14CR123	1901-0731	7	1	DIO-PWR RECT	02037	SR3010-3RL
A14CR124	1901-0731	7	1	DIO-PWR RECT	02037	SR3010-3RL
A14CR125	1901-1098	1	1	DIO-1N4150	00746	
A14F102	2110-0713	9	1	FU-SUBMIN 10A 12	04703	R251010T1
A14F103	2110-0713	9	1	FU-SUBMIN 10A 12	04703	R251010T1
A14F104	2110-0713	9	1	FU-SUBMIN 10A 12	04703	R251010T1
A14F105	2110-0713	9	1	FU-SUBMIN 10A 12	04703	R251010T1

Table C-8. 8131A Main Power Board Parts List (continued)

Reference	HP Part #	CD	Qty	Description	Manuf'r	Part #
A14F106	2110-0713	9	1	FU-SUBMIN 10A 12	04703	R251010T1
A14F107	2110-0713	9	1	FU-SUBMIN 10A 12	04703	R251010T1
A14F108	2110-0713	9	1	FU-SUBMIN 10A 12	04703	R251010T1
A14F109	2110-0713	9	1	FU-SUBMIN 10A 12	04703	R251010T1
A14J1	1251-8324	1	1	CONN-POST-TP-HDR	04486	G06M96P4BEBL-004-715
A14J2	1251-4547	2	1	CONN-POST-TP-HDR	01380	1-87227-0
A14J3	1251-4547	2	1	CONN-POST-TP-HDR	01380	1-87227-0
A14J4	1251-5153	8	1	CONN-SGL CONT	04880	836
A14J5	1251-5153	8	1	CONN-SGL CONT	04880	836
A14J6	1251-3751	8	1	CONN-POST-TP-HDR	03418	26-60-1080
A14J7	1251-3751	8	1	CONN-POST-TP-HDR	03418	26-60-1080
A14J8	1251-5383	6	1	CONN-POST-TP-HDR	03394	1102-8-102-01
A14MP101	08131-21103	8	1	H-SINK	28480	08131-21103
A14MP102	08131-21103	8	1	H-SINK	28480	08131-21103
A14MP103	08131-45401	9	1	INS 8XTO 220	28480	08131-45401
A14MP104	08131-45401	9	1	INS 8XTO 220	28480	08131-45401
A14Q101	1855-0499	5	1	MOSFET P-CHAN	03038	IRF9531
A14Q102	1855-0499	5	1	MOSFET P-CHAN	03038	IRF9531
A14Q103	1855-0645	3	1	MOSFET N-CHAN	02037	BUZ11
A14Q104	1855-0645	3	1	MOSFET N-CHAN	02037	BUZ11
A14Q105	1855-0645	3	1	MOSFET N-CHAN	02037	BUZ11
A14Q106	1855-0645	3	1	MOSFET N-CHAN	02037	BUZ11
A14Q107	1855-0548	5	1	MOSFET N-CHAN	02037	BUZ71A
A14Q108	1855-0548	5	1	MOSFET N-CHAN	02037	BUZ71A
A14Q109	1855-0645	3	1	MOSFET N-CHAN	02037	BUZ11
A14Q110	1855-0645	3	1	MOSFET N-CHAN	02037	BUZ11
A14Q111	1855-0548	5	1	MOSFET N-CHAN	02037	BUZ71A
A14Q112	1855-0548	5	1	MOSFET N-CHAN	02037	BUZ71A
A14R101	0757-0442	9	1	RES 10K 1% .125W	00746	CRB14 OR CRB25
A14R102	0757-0442	9	1	RES 10K 1% .125W	00746	CRB14 OR CRB25

Table C-8. 8131A Main Power Board Parts List (continued)

Reference	HP Part #	CD	Qty	Description	Manuf'r	Part #
A14R103	0757-0465	6	1	RES 100K 1% .125	00746	CRB14 OR CRB25
A14R104	0757-0465	6	1	RES 100K 1% .125	00746	CRB14 OR CRB25
A14R105	0757-0442	9	1	RES 10K 1% .125W	00746	CRB14 OR CRB25
A14R106	0757-0442	9	1	RES 10K 1% .125W	00746	CRB14 OR CRB25
A14R107	0698-3156	2	1	RES 14.7K 1% .12	00746	CRB14 OR CRB25
A14R108	0757-0442	9	1	RES 10K 1% .125W	00746	CRB14 OR CRB25
A14R109	0757-0442	9	1	RES 10K 1% .125W	00746	CRB14 OR CRB25
A14R110	0757-0442	9	1	RES 10K 1% .125W	00746	CRB14 OR CRB25
A14R111	0757-0442	9	1	RES 10K 1% .125W	00746	CRB14 OR CRB25
A14R112	0757-0442	9	1	RES 10K 1% .125W	00746	CRB14 OR CRB25
A14R113	0812-0111	7	1	RES .05 3% 3W PW	05524	RS-2B
A14R114	0812-0111	7	1	RES .05 3% 3W PW	05524	RS-2B
A14R115	0812-0111	7	1	RES .05 3% 3W PW	05524	RS-2B
A14R116	0812-0111	7	1	RES .05 3% 3W PW	05524	RS-2B
A14R117	0812-0111	7	1	RES .05 3% 3W PW	05524	RS-2B
A14R118	0811-3470	5	1	RES .1 3% 3W PWI	05524	CW-2B-39
A14R119	0698-6360	6	1	RES 10K .1% .125	00746	CRB14 OR CRB25
A14R120	0757-0466	7	1	RES 110K 1% .125	00746	CRB14 OR CRB25
A14R121	0698-6360	6	1	RES 10K .1% .125	00746	CRB14 OR CRB25
A14R122	0757-0416	7	1	RES 511 1% .125W	00746	CRB14 OR CRB25
A14R123	0698-3160	8	1	RES 31.6K 1% .12	00746	CRB14 OR CRB25
A14R124	0757-0283	6	1	RES 2K 1% .125W	00746	CRB14 OR CRB25
A14R125	0698-6348	0	1	RES 3K .1% .125W	00746	CRB14 OR CRB25
A14R126	0757-0465	6	1	RES 100K 1% .125	00746	CRB14 OR CRB25
A14R127	0698-0063	4	1	RES 5.23K 1% .12	00746	CRB14 OR CRB25
A14R128	0698-3132	4	1	RES 261 1% .125W	00746	CRB14 OR CRB25
A14R129	0757-0280	3	1	RES 1K 1% .125W	00746	CRB14 OR CRB25
A14TP101	0360-2264	6	1	TERM.-TEST POINT	10358	1095D
A14TP102	0360-2264	6	1	TERM.-TEST POINT	10358	1095D
A14U101	1826-1245	0	1	IC TL7702A	01698	TL7702A

Table C-8. 8131A Main Power Board Parts List (continued)

Reference	HP Part #	CD	Qty	Description	Manuf'r	Part #
A14U103	1826-0346	0	1	IC 358	03406	LM358N
A14U104	1826-0393	7	1	IC LM317T	01698	LM317KC
A14VR101	1902-0964	0	1	DIO-ZNR 18V 5%	02037	
A14VR102	1902-0964	0	1	DIO-ZNR 18V 5%	02037	
A14VR103	1902-0959	3	1	DIO-ZNR 11V 5%	02037	
A14VR104	1902-0968	4	1	DIO-ZNR 27V 5%	02037	

Channel 1 Board

Table C-9. 8131A Standard Channel 1 Board Parts List

Reference	HP Part #	CD	Qty	Description	Manuf'r	Part #
A26	08131-66526	3	1	BD AY CHAN 1	28480	08131-66526
A26A416	08131-66416	0	1	BD AY TRANSDUCE	28480	08131-66416
A26C100	0160-5746	1	1	CAP 0.1uF 50 V	06121	B37987-T5104-M11
A26C101	0160-5332	1	1	CAP 0.1uF 50 V	02010	MD015C104MABH
A26C102	0160-5332	1	1	CAP 0.1uF 50 V	02010	MD015C104MABH
A26C103	0160-5730	3	1	CAP 100pF 100 V	06121	B37979-J1101-J034
A26C104	0160-5730	3	1	CAP 100pF 100 V	06121	B37979-J1101-J034
A26C105	0160-5730	3	1	CAP 100pF 100 V	06121	B37979-J1101-J034
A26C106	0160-5726	7	1	CAP 0.01uF 100 V	06121	B37987-J1103-M034
A26C107	0160-5726	7	1	CAP 0.01uF 100 V	06121	B37987-J1103-M034
A26C108	0160-5332	1	1	CAP 0.1uF 50 V	02010	MD015C104MABH
A26C109	0160-5332	1	1	CAP 0.1uF 50 V	02010	MD015C104MABH
A26C111	0160-5728	9	1	CAP 1000pF 100 V	06121	B37986-J1102-J034
A26C113	0160-5728	9	1	CAP 1000pF 100 V	06121	B37986-J1102-J034
A26C115	0160-5728	9	1	CAP 1000pF 100 V	06121	B37986-J1102-J034

Table C-9. 8131A Standard Channel 1 Board Parts List (continued)

Reference	HP Part #	CD	Qty	Description	Manuf'r	Part #
A26C117	0160-5728	9	1	CAP 1000pF 100 V	06121	B37986-J1102-J034
A26C119	0160-5728	9	1	CAP 1000pF 100 V	06121	B37986-J1102-J034
A26C121	0160-5728	9	1	CAP 1000pF 100 V	06121	B37986-J1102-J034
A26C125	0160-6623	5	1	CAP 0.1uF 50 V	02010	SA115C104MAAH
A26C126	0160-6500	7	1	CAP 0.01uF 100 V	02010	SA101C103KAAH
A26C127	0160-6500	7	1	CAP 0.01uF 100 V	02010	SA101C103KAAH
A26C129	0160-5728	9	1	CAP 1000pF 100 V	06121	B37986-J1102-J034
A26C130	0160-5332	1	1	CAP 0.1uF 50 V	02010	MD015C104MABH
A26C131	0160-5332	1	1	CAP 0.1uF 50 V	02010	MD015C104MABH
A26C132	0160-5332	1	1	CAP 0.1uF 50 V	02010	MD015C104MABH
A26C133	0160-5726	7	1	CAP 0.01uF 100 V	06121	B37987-J1103-M034
A26C134	0160-5726	7	1	CAP 0.01uF 100 V	06121	B37987-J1103-M034
A26C135	0160-5728	9	1	CAP 1000pF 100 V	06121	B37986-J1102-J034
A26C136	0160-5728	9	1	CAP 1000pF 100 V	06121	B37986-J1102-J034
A26C139	0160-5332	1	1	CAP 0.1uF 50 V	02010	MD015C104MABH
A26C140	0160-5332	1	1	CAP 0.1uF 50 V	02010	MD015C104MABH
A26C141	0160-6500	7	1	CAP 0.01uF 100 V	02010	SA101C103KAAH
A26C142	0160-6500	7	1	CAP 0.01uF 100 V	02010	SA101C103KAAH
A26C143	0160-5332	1	1	CAP 0.1uF 50 V	02010	MD015C104MABH
A26C401	0160-5726	7	1	CAP 0.01uF 100 V	06121	B37987-J1103-M034
A26C402	0160-5728	9	1	CAP 1000pF 100 V	06121	B37986-J1102-J034
A26C403	0160-5726	7	1	CAP 0.01uF 100 V	06121	B37987-J1103-M034
A26C404	0160-5741	6	1	CAP 47pF 100 V	06121	B37979-J1470-J034
A26C405	0160-5728	9	1	CAP 1000pF 100 V	06121	B37986-J1102-J034
A26C407	0160-5728	9	1	CAP 1000pF 100 V	06121	B37986-J1102-J034
A26C409	0160-5728	9	1	CAP 1000pF 100 V	06121	B37986-J1102-J034
A26C410	0160-5728	9	1	CAP 1000pF 100 V	06121	B37986-J1102-J034
A26C411	0160-5730	3	1	CAP 100pF 100 V	06121	B37979-J1101-J034
A26C412	0160-5730	3	1	CAP 100pF 100 V	06121	B37979-J1101-J034
A26C413	0160-5730	3	1	CAP 100pF 100 V	06121	B37979-J1101-J034

Table C-9. 8131A Standard Channel 1 Board Parts List (continued)

Reference	HP Part #	CD	Qty	Description	Manuf'r	Part #
A26C414	0160-5730	3	1	CAP 100pF 100 V	06121	B37979-J1101-J034
A26C415	0160-5726	7	1	CAP 0.01uF 100 V	06121	B37987-J1103-M034
A26C416	0160-6500	7	1	CAP 0.01uF 100 V	02010	SA101C103KAAH
A26C417	0160-6500	7	1	CAP 0.01uF 100 V	02010	SA101C103KAAH
A26C418	0160-5726	7	1	CAP 0.01uF 100 V	06121	B37987-J1103-M034
A26C419	0160-6500	7	1	CAP 0.01uF 100 V	02010	SA101C103KAAH
A26C420	0160-5726	7	1	CAP 0.01uF 100 V	06121	B37987-J1103-M034
A26C421	0160-5741	6	1	CAP 47pF 100 V	06121	B37979-J1470-J034
A26C422	0160-5728	9	1	CAP 1000pF 100 V	06121	B37986-J1102-J034
A26C425	0160-5726	7	1	CAP 0.01uF 100 V	06121	B37987-J1103-M034
A26C426	0160-6500	7	1	CAP 0.01uF 100 V	02010	SA101C103KAAH
A26C427	0160-5746	1	1	CAP 0.1uF 50 V	06121	B37987-T5104-M11
A26C429	0160-5726	7	1	CAP 0.01uF 100 V	06121	B37987-J1103-M034
A26C430	0160-5726	7	1	CAP 0.01uF 100 V	06121	B37987-J1103-M034
A26C431	0160-6500	7	1	CAP 0.01uF 100 V	02010	SA101C103KAAH
A26C432	0160-6500	7	1	CAP 0.01uF 100 V	02010	SA101C103KAAH
A26C433	0160-6500	7	1	CAP 0.01uF 100 V	02010	SA101C103KAAH
A26C434	0160-5740	5	1	CAP 33pF 100 V	06121	B37979-J1330-J034
A26C435	0160-6500	7	1	CAP 0.01uF 100 V	02010	SA101C103KAAH
A26C436	0160-6500	7	1	CAP 0.01uF 100 V	02010	SA101C103KAAH
A26C437	0160-6500	7	1	CAP 0.01uF 100 V	02010	SA101C103KAAH
A26C439	0160-3873	1	1	CAP 4.7pF 200 V	06352	FD12C0G2D4R7D
A26C440	0160-5747	2	1	CAP 0.047uF 50 V	06121	B37987-J5473-M034
A26C441	0160-5747	2	1	CAP 0.047uF 50 V	06121	B37987-J5473-M034
A26C450	0160-3873	1	1	CAP 4.7pF 200 V	06352	FD12C0G2D4R7D
A26C451	0160-6500	7	1	CAP 0.01uF 100 V	02010	SA101C103KAAH
A26C452	0160-6500	7	1	CAP 0.01uF 100 V	02010	SA101C103KAAH
A26C453	0160-6500	7	1	CAP 0.01uF 100 V	02010	SA101C103KAAH
A26C460	0160-5737	0	1	CAP 68pF 100 V	06121	B37979-J1680-J034
A26C461	0160-5737	0	1	CAP 68pF 100 V	06121	B37979-J1680-J034

Table C-9. 8131A Standard Channel 1 Board Parts List (continued)

Reference	HP Part #	CD	Qty	Description	Manuf'r	Part #
A26C470	0160-5726	7	1	CAP 0.01uF 100 V	06121	B37987-J1103-M034
A26C471	0160-5728	9	1	CAP 1000pF 100 V	06121	B37986-J1102-J034
A26C472	0160-5746	1	1	CAP 0.1uF 50 V	06121	B37987-T5104-M11
A26C473	0160-5726	7	1	CAP 0.01uF 100 V	06121	B37987-J1103-M034
A26C474	0160-5728	9	1	CAP 1000pF 100 V	06121	B37986-J1102-J034
A26C475	0160-6500	7	1	CAP 0.01uF 100 V	02010	SA101C103KAAH
A26C476	0160-6623	5	1	CAP 0.1uF 50 V	02010	SA115C104MAAH
A26C477	0160-5728	9	1	CAP 1000pF 100 V	06121	B37986-J1102-J034
A26C478	0160-5726	7	1	CAP 0.01uF 100 V	06121	B37987-J1103-M034
A26C479	0160-6623	5	1	CAP 0.1uF 50 V	02010	SA115C104MAAH
A26C480	0160-5728	9	1	CAP 1000pF 100 V	06121	B37986-J1102-J034
A26C481	0160-5728	9	1	CAP 1000pF 100 V	06121	B37986-J1102-J034
A26C482	0160-5728	9	1	CAP 1000pF 100 V	06121	B37986-J1102-J034
A26C483	0160-6500	7	1	CAP 0.01uF 100 V	02010	SA101C103KAAH
A26C484	0160-5746	1	1	CAP 0.1uF 50 V	06121	B37987-T5104-M11
A26C485	0160-5746	1	1	CAP 0.1uF 50 V	06121	B37987-T5104-M11
A26C486	0160-5746	1	1	CAP 0.1uF 50 V	06121	B37987-T5104-M11
A26C601	0160-6500	7	1	CAP 0.01uF 100 V	02010	SA101C103KAAH
A26C604	0160-5726	7	1	CAP 0.01uF 100 V	06121	B37987-J1103-M034
A26C605	0160-5726	7	1	CAP 0.01uF 100 V	06121	B37987-J1103-M034
A26C606	0160-6500	7	1	CAP 0.01uF 100 V	02010	SA101C103KAAH
A26C607	0160-5726	7	1	CAP 0.01uF 100 V	06121	B37987-J1103-M034
A26C608	0160-5746	1	1	CAP 0.1uF 50 V	06121	B37987-T5104-M11
A26C609	0160-5726	7	1	CAP 0.01uF 100 V	06121	B37987-J1103-M034
A26C610	0160-5746	1	1	CAP 0.1uF 50 V	06121	B37987-T5104-M11
A26C611	0160-5726	7	1	CAP 0.01uF 100 V	06121	B37987-J1103-M034
A26C613	0160-5726	7	1	CAP 0.01uF 100 V	06121	B37987-J1103-M034
A26C614	0160-5746	1	1	CAP 0.1uF 50 V	06121	B37987-T5104-M11
A26C615	0160-6500	7	1	CAP 0.01uF 100 V	02010	SA101C103KAAH
A26C616	0160-6500	7	1	CAP 0.01uF 100 V	02010	SA101C103KAAH

Table C-9. 8131A Standard Channel 1 Board Parts List (continued)

Reference	HP Part #	CD	Qty	Description	Manuf'r	Part #
A26C617	0160-6500	7	1	CAP 0.01uF 100 V	02010	SA101C103KAAH
A26C618	0160-5746	1	1	CAP 0.1uF 50 V	06121	B37987-T5104-M11
A26CP110	0180-0116	1	1	CAP 6.8uF 35 V	04200	150D685X9035B2-DYS
A26CP112	0180-0374	3	1	CAP 10uF 20 V	04200	150D106X9020B2-DYS
A26CP114	0180-0374	3	1	CAP 10uF 20 V	04200	150D106X9020B2-DYS
A26CP116	0180-0116	1	1	CAP 6.8uF 35 V	04200	150D685X9035B2-DYS
A26CP118	0180-0116	1	1	CAP 6.8uF 35 V	04200	150D685X9035B2-DYS
A26CP120	0180-0374	3	1	CAP 10uF 20 V	04200	150D106X9020B2-DYS
A26CP122	0180-2205	3	1	CAP 0.33uF 35 V	04200	150D334X9035A2-DYS
A26CP123	0180-4129	4	1	CAP 1uF 35 V	04200	173D105X9035V
A26CP128	0180-4129	4	1	CAP 1uF 35 V	04200	173D105X9035V
A26CP438	0180-4129	4	1	CAP 1uF 35 V	04200	173D105X9035V
A26CP439	0180-4129	4	1	CAP 1uF 35 V	04200	173D105X9035V
A26CR100	1901-0535	9	1	DIO- SCHOTTKY SM	02062	50825511
A26CR108	1901-0535	9	1	DIO- SCHOTTKY SM	02062	50825511
A26CR109	1901-0535	9	1	DIO- SCHOTTKY SM	02062	50825511
A26CR111	1901-0535	9	1	DIO- SCHOTTKY SM	02062	50825511
A26CR112	1901-0535	9	1	DIO- SCHOTTKY SM	02062	50825511
A26CR122	1901-0033	2	1	DIO-GEN PRP	03406	
A26CR123	1901-0535	9	1	DIO- SCHOTTKY SM	02062	50825511
A26CR124	1901-0535	9	1	DIO- SCHOTTKY SM	02062	50825511
A26CR125	1901-0535	9	1	DIO- SCHOTTKY SM	02062	50825511
A26CR126	1901-0535	9	1	DIO- SCHOTTKY SM	02062	50825511
A26CR414	1901-0033	2	1	DIO-GEN PRP	03406	
A26CR415	1901-0732	8	1	DIO-PWR RECT	02037	SR3010-4RL
A26CR416	1901-0732	8	1	DIO-PWR RECT	02037	SR3010-4RL
A26CR417	1901-1098	1	1	DIO-1N4150	00746	
A26CR418	1901-1098	1	1	DIO-1N4150	00746	
A26CR419	1901-1098	1	1	DIO-1N4150	00746	
A26CR420	1901-1098	1	1	DIO-1N4150	00746	

Table C-9. 8131A Standard Channel 1 Board Parts List (continued)

Reference	HP Part #	CD	Qty	Description	Manuf'r	Part #
A26CR601	1901-0535	9	1	DIO- SCHOTTKY SM	02062	50825511
A26CR602	1901-1098	1	1	DIO-1N4150	00746	
A26J1	1251-8324	1	1	CONN-POST-TP-HDR	04486	G06M96P4BEBL-004-715
A26J101	1251-1556	7	4	CONN-SGL CONT	01075	006-4844-00-0-990
A26J102	1251-1556	7	4	CONN-SGL CONT	01075	006-4844-00-0-990
A26J103	1251-4682	6	1	CONN-POST-TP-HDR	03394	1102-1-103-02
A26J403	1252-2649	3	1	CONN ELAST 43LG	09922	NE 0.2P 43.0L 3.0H 3.6W
A26J404	1252-2649	3	1	CONN ELAST 43LG	09922	NE 0.2P 43.0L 3.0H 3.6W
A26J405	1252-2650	6	1	CONN ELAST 30LG	09922	NE 0.2P 30.0L 3.0H 3.6W
A26J406	1252-2651	7	1	CONN ELAST 5LG	09922	NE 0.2P 5.0L 3.0H 3.6W
A26J407	1252-2651	7	1	CONN ELAST 5LG	09922	NE 0.2P 5.0L 3.0H 3.6W
A26J408	1252-2651	7	1	CONN ELAST 5LG	09922	NE 0.2P 5.0L 3.0H 3.6W
A26J423	1252-2648	2	1	CONN ELAST 30LG	09922	NE 0.4P 30.0L 3.5H 4.2W
A26J424	1252-2648	2	1	CONN ELAST 30LG	09922	NE 0.4P 30.0L 3.5H 4.2W
A26J425	1252-2647	1	1	CONN ELAST 0.4P	09922	NE 0.4P 43.0L 3.5H 4.2W
A26J426	1252-2647	1	1	CONN ELAST 0.4P	09922	NE 0.4P 43.0L 3.5H 4.2W
A26K403	0955-0452	1	1	CONN-RF SMB	02574	S-4845
A26K404	0955-0452	1	1	CONN-RF SMB	02574	S-4845
A26L100	9100-1788	6	1	CORE-FERRITE	02995	VK200 20/4B
A26L101	9100-1788	6	1	CORE-FERRITE	02995	VK200 20/4B
A26L102	9100-1788	6	1	CORE-FERRITE	02995	VK200 20/4B
A26L103	9100-1788	6	1	CORE-FERRITE	02995	VK200 20/4B
A26L104	9100-1788	6	1	CORE-FERRITE	02995	VK200 20/4B
A26L105	9100-1788	6	1	CORE-FERRITE	02995	VK200 20/4B
A26L401	9100-2257	6	1	L 820NH +-10%	03273	10M820K
A26L402	9100-2256	5	1	L 560NH +-10%	03273	10M560K
A26L403	9100-2257	6	1	L 820NH +-10%	03273	10M820K
A26L404	9100-2256	5	1	L 560NH +-10%	03273	10M560K
A26MP1	08131-00601	7	1		28480	08131-00601
A26MP2	0403-0285	9	2	BMPR FT-ADH MTG	04726	SJ-5018 GRAY

Table C-9. 8131A Standard Channel 1 Board Parts List (continued)

Reference	HP Part #	CD	Qty	Description	Manuf'r	Part #
A26MP16	3050-0152	3	3	WSHR-SHLDR	04604	1462
A26MP20	0515-0659	8	4	SCR-MACHINE	05610	
A26MP21	3050-0960	1	2	WASHER-SHLDR 3.0	05947	V5359
A26MP22	3050-0098	6	2	WSHR-FL MTLC	04939	AN960 C2
A26MP141	0340-1212	0	1	INSULATOR	28480	0340-1212
A26MP142	08131-21101	6	1	HEATSINK TUB	28480	08131-21101
A26MP143	08131-40503	2	1	FRAME PLASTIC	28480	08131-40503
A26MP144	08131-04104	3	1	COVER	28480	08131-04104
A26MP145	08131-05401	5	1	DUST HYBRD COV	28480	08131-05401
A26MP403	1205-0295	2	1	HEAT SINK	02608	6107B-14
A26MP404	1205-0295	2	1	HEAT SINK	02608	6107B-14
A26MP405	1205-0295	2	1	HEAT SINK	02608	6107B-14
A26MP413	0340-1074	2	1	INSUL-XSTR	05447	3223-07FR-58-AC
A26MP414	0340-1074	2	1	INSUL-XSTR	05447	3223-07FR-58-AC
A26MP415	0340-1074	2	1	INSUL-XSTR	05447	3223-07FR-58-AC
A26MP603	1205-0295	2	1	HEAT SINK	02608	6107B-14
A26MP609	1205-0011	0	1	HEAT SINK	02608	2226B
A26MP613	0340-1074	2	1	INSUL-XSTR	05447	3223-07FR-58-AC
A26MP618	0340-1074	2	1	INSUL-XSTR	05447	3223-07FR-58-AC
A26Q100	1854-1028	6	1	XSTR NPN SI	02037	2N3904
A26Q101	1853-0314	9	1	XSTR PNP 2N2905A	02037	2N2905A
A26Q102	1854-0637	1	1	XSTR NPN 2N2219A	02037	2N2219A
A26Q401	1854-0583	6	1	XSTR NPN SI	02037	MPS-A18
A26Q403	1854-0828	2	1	XSTR NPN SI	00039	NTD560
A26Q404	1853-0468	4	1	XSTR PNP SI DARL	02037	TIP-127
A26Q405	1855-0548	5	1	MOSFET N-CHAN	02037	BUZ71A
A26Q406	1855-0751	2	1	MOSFET N-CHAN	02883	VN0808M
A26Q411	1854-0583	6	1	XSTR NPN SI	02037	MPS-A18
A26Q412	1855-0751	2	1	MOSFET N-CHAN	02883	VN0808M
A26Q413	1855-0751	2	1	MOSFET N-CHAN	02883	VN0808M
A26Q415	1855-0689	5	1	J-FET CHIP P-CHA	02037	2N5461

Table C-9. 8131A Standard Channel 1 Board Parts List (continued)

Reference	HP Part #	CD	Qty	Description	Manuf'r	Part #
A26Q416	1853-0563	0	1	XSTR PNP SI	02037	2N3906(SEL)
A26Q430	1853-0563	0	1	XSTR PNP SI	02037	2N3906(SEL)
A26Q431	1853-0563	0	1	XSTR PNP SI	02037	2N3906(SEL)
A26Q603	1855-0548	5	1	MOSFET N-CHAN	02037	BUZ71A
A26Q605	1854-1028	6	1	XSTR NPN SI	02037	2N3904
A26Q606	1855-0751	2	1	MOSFET N-CHAN	02883	VN0808M
A26Q608	1853-0509	4	1	XSTR PNP	01698	TIP42A
A26Q609	1853-0314	9	1	XSTR PNP 2N2905A	02037	2N2905A
A26R100	0757-0442	9	1	RES 10K 1% .125W	00746	CRB14 OR CRB25
A26R101	0757-0465	6	1	RES 100K 1% .125	00746	CRB14 OR CRB25
A26R102	0698-8827	4	1	RES 1M 1% .125W	00746	CRB14 OR CRB25
A26R105	0698-3452	1	1	RES 147K 1% .125	00746	CRB14 OR CRB25
A26R106	0698-3132	4	1	RES 261 1% .125W	00746	CRB14 OR CRB25
A26R107	0698-3439	4	1	RES 178 1% .125W	00746	CRB14 OR CRB25
A26R108	0698-6360	6	1	RES 10K .1% .125	00746	CRB14 OR CRB25
A26R109	0698-6360	6	1	RES 10K .1% .125	00746	CRB14 OR CRB25
A26R110	0698-6630	3	1	RES 20K .1% .125	00746	CRB14 OR CRB25
A26R111	0698-6360	6	1	RES 10K .1% .125	00746	CRB14 OR CRB25
A26R112	0757-0442	9	1	RES 10K 1% .125W	00746	CRB14 OR CRB25
A26R113	0698-3279	0	1	RES 4.99K 1% .12	00746	CRB14 OR CRB25
A26R114	0757-0439	4	1	RES 6.81K 1% .12	00746	CRB14 OR CRB25
A26R115	0757-0280	3	1	RES 1K 1% .125W	00746	CRB14 OR CRB25
A26R116	0757-0280	3	1	RES 1K 1% .125W	00746	CRB14 OR CRB25
A26R117	0757-0280	3	1	RES 1K 1% .125W	00746	CRB14 OR CRB25
A26R118	0757-0280	3	1	RES 1K 1% .125W	00746	CRB14 OR CRB25
A26R119	0757-0442	9	1	RES 10K 1% .125W	00746	CRB14 OR CRB25
A26R120	0757-0274	5	1	RES 1.21K 1% .12	00746	CRB14 OR CRB25
A26R121	0757-0438	3	1	RES 5.11K 1% .12	00746	CRB14 OR CRB25
A26R130	0757-0278	9	1	RES 1.78K 1% .12	00746	CRB14 OR CRB25
A26R131	0698-3153	9	1	RES 3.83K 1% .12	00746	CRB14 OR CRB25

Table C-9. 8131A Standard Channel 1 Board Parts List (continued)

Reference	HP Part #	CD	Qty	Description	Manuf'r	Part #
A26R132	0757-0439	4	1	RES 6.81K 1% .12	00746	CRB14 OR CRB25
A26R135	0757-0439	4	1	RES 6.81K 1% .12	00746	CRB14 OR CRB25
A26R136	0698-3153	9	1	RES 3.83K 1% .12	00746	CRB14 OR CRB25
A26R137	0757-0278	9	1	RES 1.78K 1% .12	00746	CRB14 OR CRB25
A26R140	0698-6360	6	1	RES 10K .1% .125	00746	CRB14 OR CRB25
A26R141	0698-6360	6	1	RES 10K .1% .125	00746	CRB14 OR CRB25
A26R142	0698-3279	0	1	RES 4.99K 1% .12	00746	CRB14 OR CRB25
A26R144	0698-3161	9	1	RES 38.3K 1% .12	00746	CRB14 OR CRB25
A26R145	0757-0199	3	1	RES 21.5K 1% .12	00746	CRB14 OR CRB25
A26R146	0757-0416	7	1	RES 511 1% .125W	00746	CRB14 OR CRB25
A26R147	0698-3136	8	1	RES 17.8K 1% .12	00746	CRB14 OR CRB25
A26R148	0757-0442	9	1	RES 10K 1% .125W	00746	CRB14 OR CRB25
A26R149	0757-0416	7	1	RES 511 1% .125W	00746	CRB14 OR CRB25
A26R150	0757-0416	7	1	RES 511 1% .125W	00746	CRB14 OR CRB25
A26R157	0757-0442	9	1	RES 10K 1% .125W	00746	CRB14 OR CRB25
A26R200	1250-2206	4	1	TERM 50 OHM	28480	1250-2206
A26R300	1250-2206	4	1	TERM 50 OHM	28480	1250-2206
A26R400	8159-0005	0	1	RES-ZERO OHMS	01339	L-2007-1
A26R401	0698-3242	7	1	RES 357 1% .125W	00746	CRB14 OR CRB25
A26R402	0757-0280	3	1	RES 1K 1% .125W	00746	CRB14 OR CRB25
A26R403	0698-3558	8	1	RES 4.02K 1% .12	00746	CRB14 OR CRB25
A26R404	8159-0005	0	1	RES-ZERO OHMS	01339	L-2007-1
A26R405	0757-0416	7	1	RES 511 1% .125W	00746	CRB14 OR CRB25
A26R406	0757-0442	9	1	RES 10K 1% .125W	00746	CRB14 OR CRB25
A26R407	0757-0449	6	1	RES 20K 1% .125W	00746	CRB14 OR CRB25
A26R408	0757-0416	7	1	RES 511 1% .125W	00746	CRB14 OR CRB25
A26R410	0698-0084	9	1	RES 2.15K 1% .12	00746	CRB14 OR CRB25
A26R411	0757-0449	6	1	RES 20K 1% .125W	00746	CRB14 OR CRB25
A26R412	0757-0442	9	1	RES 10K 1% .125W	00746	CRB14 OR CRB25
A26R413	0757-0442	9	1	RES 10K 1% .125W	00746	CRB14 OR CRB25

Table C-9. 8131A Standard Channel 1 Board Parts List (continued)

Reference	HP Part #	CD	Qty	Description	Manuf'r	Part #
A26R414	0757-0279	0	1	RES 3.16K 1% .12	00746	CRB14 OR CRB25
A26R415	0757-0280	3	1	RES 1K 1% .125W	00746	CRB14 OR CRB25
A26R416	0757-0280	3	1	RES 1K 1% .125W	00746	CRB14 OR CRB25
A26R417	0757-0280	3	1	RES 1K 1% .125W	00746	CRB14 OR CRB25
A26R418	0757-0280	3	1	RES 1K 1% .125W	00746	CRB14 OR CRB25
A26R419	0757-0438	3	1	RES 5.11K 1% .12	00746	CRB14 OR CRB25
A26R420	0757-0442	9	1	RES 10K 1% .125W	00746	CRB14 OR CRB25
A26R421	0757-0442	9	1	RES 10K 1% .125W	00746	CRB14 OR CRB25
A26R422	0757-0416	7	1	RES 511 1% .125W	00746	CRB14 OR CRB25
A26R423	0757-0442	9	1	RES 10K 1% .125W	00746	CRB14 OR CRB25
A26R424	0698-4477	2	1	RES 10.5K 1% .12	00746	CRB14 OR CRB25
A26R425	0698-4445	4	1	RES 5.76K 1% .12	00746	CRB14 OR CRB25
A26R426	0698-3153	9	1	RES 3.83K 1% .12	00746	CRB14 OR CRB25
A26R427	0757-0442	9	1	RES 10K 1% .125W	00746	CRB14 OR CRB25
A26R428	0698-3430	5	1	RES 21.5 1% .125	00746	CRB14 OR CRB25
A26R429	0757-0284	7	1	RES 150 1% .125W	00746	CRB14 OR CRB25
A26R430	0757-0442	9	1	RES 10K 1% .125W	00746	CRB14 OR CRB25
A26R431	0757-0442	9	1	RES 10K 1% .125W	00746	CRB14 OR CRB25
A26R432	0698-3446	3	1	RES 383 1% .125W	00746	CRB14 OR CRB25
A26R434	0757-0999	1	1	RES 47.5 1% .5W	01074	H2
A26R435	0757-0401	0	1	RES 100 1% .125W	00746	CRB14 OR CRB25
A26R436	0698-0085	0	1	RES 2.61K 1% .12	00746	CRB14 OR CRB25
A26R437	0757-0442	9	1	RES 10K 1% .125W	00746	CRB14 OR CRB25
A26R438	0757-0401	0	1	RES 100 1% .125W	00746	CRB14 OR CRB25
A26R439	0757-0442	9	1	RES 10K 1% .125W	00746	CRB14 OR CRB25
A26R440	0757-0444	1	1	RES 12.1K 1% .12	00746	CRB14 OR CRB25
A26R441	0757-0280	3	1	RES 1K 1% .125W	00746	CRB14 OR CRB25
A26R442	0757-0442	9	1	RES 10K 1% .125W	00746	CRB14 OR CRB25
A26R443	0757-0442	9	1	RES 10K 1% .125W	00746	CRB14 OR CRB25
A26R444	0757-0421	4	1	RES 825 1% .125W	00746	CRB14 OR CRB25

Table C-9. 8131A Standard Channel 1 Board Parts List (continued)

Reference	HP Part #	CD	Qty	Description	Manuf'r	Part #
A26R445	0698-3152	8	1	RES 3.48K 1% .12	00746	CRB14 OR CRB25
A26R446	0757-0290	5	1	RES 6.19K 1% .12	00746	CRB14 OR CRB25
A26R447	0757-0444	1	1	RES 12.1K 1% .12	00746	CRB14 OR CRB25
A26R448	0698-3156	2	1	RES 14.7K 1% .12	00746	CRB14 OR CRB25
A26R449	0757-0442	9	1	RES 10K 1% .125W	00746	CRB14 OR CRB25
A26R450	0757-0440	7	1	RES 7.5K 1% .125	00746	CRB14 OR CRB25
A26R451	0698-4469	2	1	RES 1.15K 1% .12	00746	CRB14 OR CRB25
A26R452	0757-0428	1	1	RES 1.62K 1% .12	00746	CRB14 OR CRB25
A26R453	0757-0290	5	1	RES 6.19K 1% .12	00746	CRB14 OR CRB25
A26R454	0757-0442	9	1	RES 10K 1% .125W	00746	CRB14 OR CRB25
A26R456	0698-3444	1	1	RES 316 1% .125W	00746	CRB14 OR CRB25
A26R457	0757-0442	9	1	RES 10K 1% .125W	00746	CRB14 OR CRB25
A26R458	0757-0442	9	1	RES 10K 1% .125W	00746	CRB14 OR CRB25
A26R459	0757-0442	9	1	RES 10K 1% .125W	00746	CRB14 OR CRB25
A26R460	0757-0442	9	1	RES 10K 1% .125W	00746	CRB14 OR CRB25
A26R464	0757-0439	4	1	RES 6.81K 1% .12	00746	CRB14 OR CRB25
A26R465	0698-0085	0	1	RES 2.61K 1% .12	00746	CRB14 OR CRB25
A26R466	0698-0085	0	1	RES 2.61K 1% .12	00746	CRB14 OR CRB25
A26R467	0757-0442	9	1	RES 10K 1% .125W	00746	CRB14 OR CRB25
A26R468	0757-0442	9	1	RES 10K 1% .125W	00746	CRB14 OR CRB25
A26R469	0757-0416	7	1	RES 511 1% .125W	00746	CRB14 OR CRB25
A26R470	0698-4448	7	1	RES 294 1% .125W	00746	CRB14 OR CRB25
A26R471	0698-3438	3	1	RES 147 1% .125W	00746	CRB14 OR CRB25
A26R472	0698-4037	0	1	RES 46.4 1% .125	00746	CRB14 OR CRB25
A26R473	0757-0442	9	1	RES 10K 1% .125W	00746	CRB14 OR CRB25
A26R474	0757-0442	9	1	RES 10K 1% .125W	00746	CRB14 OR CRB25
A26R475	0757-1094	9	1	RES 1.47K 1% .12	00746	CRB14 OR CRB25
A26R476	0698-3439	4	1	RES 178 1% .125W	00746	CRB14 OR CRB25
A26R477	0698-3444	1	1	RES 316 1% .125W	00746	CRB14 OR CRB25
A26R478	0698-3444	1	1	RES 316 1% .125W	00746	CRB14 OR CRB25

Table C-9. 8131A Standard Channel 1 Board Parts List (continued)

Reference	HP Part #	CD	Qty	Description	Manuf'r	Part #
A26R479	0757-0442	9	1	RES 10K 1% .125W	00746	CRB14 OR CRB25
A26R480	0757-0442	9	1	RES 10K 1% .125W	00746	CRB14 OR CRB25
A26R484	0757-0439	4	1	RES 6.81K 1% .12	00746	CRB14 OR CRB25
A26R486	0757-0442	9	1	RES 10K 1% .125W	00746	CRB14 OR CRB25
A26R487	0757-0442	9	1	RES 10K 1% .125W	00746	CRB14 OR CRB25
A26R488	0757-0280	3	1	RES 1K 1% .125W	00746	CRB14 OR CRB25
A26R489	0757-0280	3	1	RES 1K 1% .125W	00746	CRB14 OR CRB25
A26R490	0757-0442	9	1	RES 10K 1% .125W	00746	CRB14 OR CRB25
A26R491	0757-0442	9	1	RES 10K 1% .125W	00746	CRB14 OR CRB25
A26R492	0757-0466	7	1	RES 110K 1% .125	00746	CRB14 OR CRB25
A26R493	0698-3515	7	1	RES 5.9K 1% .125	00746	CRB14 OR CRB25
A26R494	0757-0416	7	1	RES 511 1% .125W	00746	CRB14 OR CRB25
A26R498	0757-0442	9	1	RES 10K 1% .125W	00746	CRB14 OR CRB25
A26R499	0757-0442	9	1	RES 10K 1% .125W	00746	CRB14 OR CRB25
A26R500	0757-0442	9	1	RES 10K 1% .125W	00746	CRB14 OR CRB25
A26R501	0757-0441	8	1	RES 8.25K 1% .12	00746	CRB14 OR CRB25
A26R504	8159-0005	0	1	RES-ZERO OHMS	01339	L-2007-1
A26R508	0757-0442	9	1	RES 10K 1% .125W	00746	CRB14 OR CRB25
A26R509	0757-0441	8	1	RES 8.25K 1% .12	00746	CRB14 OR CRB25
A26R510	0757-0438	3	1	RES 5.11K 1% .12	00746	CRB14 OR CRB25
A26R511	0683-2265	1	1	RES 22M 5% .25W	01607	CB2265
A26R512	0698-8958	2	1	RES 511K 1% .125	00746	CRB14 OR CRB25
A26R513	0683-2265	1	1	RES 22M 5% .25W	01607	CB2265
A26R514	0698-8958	2	1	RES 511K 1% .125	00746	CRB14 OR CRB25
A26R519	0757-0280	3	1	RES 1K 1% .125W	00746	CRB14 OR CRB25
A26R520	0757-0442	9	1	RES 10K 1% .125W	00746	CRB14 OR CRB25
A26R521	8159-0005	0	1	RES-ZERO OHMS	01339	L-2007-1
A26R523	0698-3242	7	1	RES 357 1% .125W	00746	CRB14 OR CRB25
A26R524	0757-0416	7	1	RES 511 1% .125W	00746	CRB14 OR CRB25
A26R525	0757-0283	6	1	RES 2K 1% .125W	00746	CRB14 OR CRB25

Table C-9. 8131A Standard Channel 1 Board Parts List (continued)

Reference	HP Part #	CD	Qty	Description	Manuf'r	Part #
A26R526	0698-3488	3	1	RES 442 1% .125W	00746	CRB14 OR CRB25
A26R527	0698-3488	3	1	RES 442 1% .125W	00746	CRB14 OR CRB25
A26R530	0698-3558	8	1	RES 4.02K 1% .12	00746	CRB14 OR CRB25
A26R531	0757-0283	6	1	RES 2K 1% .125W	00746	CRB14 OR CRB25
A26R532	0698-0085	0	1	RES 2.61K 1% .12	00746	CRB14 OR CRB25
A26R540	0757-0407	6	1	RES 200 1% .125W	00746	CRB14 OR CRB25
A26R541	0757-0407	6	1	RES 200 1% .125W	00746	CRB14 OR CRB25
A26R550	0757-0416	7	1	RES 511 1% .125W	00746	CRB14 OR CRB25
A26R551	0757-0442	9	1	RES 10K 1% .125W	00746	CRB14 OR CRB25
A26R552	0757-0442	9	1	RES 10K 1% .125W	00746	CRB14 OR CRB25
A26R553	0757-0442	9	1	RES 10K 1% .125W	00746	CRB14 OR CRB25
A26R554	0757-0442	9	1	RES 10K 1% .125W	00746	CRB14 OR CRB25
A26R560	0757-0439	4	1	RES 6.81K 1% .12	00746	CRB14 OR CRB25
A26R561	0757-0442	9	1	RES 10K 1% .125W	00746	CRB14 OR CRB25
A26R562	0757-0442	9	1	RES 10K 1% .125W	00746	CRB14 OR CRB25
A26R563	0757-0439	4	1	RES 6.81K 1% .12	00746	CRB14 OR CRB25
A26R564	0757-0442	9	1	RES 10K 1% .125W	00746	CRB14 OR CRB25
A26R565	0757-0442	9	1	RES 10K 1% .125W	00746	CRB14 OR CRB25
A26R566	0757-0439	4	1	RES 6.81K 1% .12	00746	CRB14 OR CRB25
A26R567	0757-0280	3	1	RES 1K 1% .125W	00746	CRB14 OR CRB25
A26R568	0757-0280	3	1	RES 1K 1% .125W	00746	CRB14 OR CRB25
A26R569	0757-0444	1	1	RES 12.1K 1% .12	00746	CRB14 OR CRB25
A26R570	0698-4123	5	1	RES 499 1% .125W	00746	CRB14 OR CRB25
A26R571	0698-3159	5	1	RES 26.1K 1% .12	00746	CRB14 OR CRB25
A26R572	0698-3159	5	1	RES 26.1K 1% .12	00746	CRB14 OR CRB25
A26R573	0698-4123	5	1	RES 499 1% .125W	00746	CRB14 OR CRB25
A26R574	0698-4123	5	1	RES 499 1% .125W	00746	CRB14 OR CRB25
A26R575	0757-0280	3	1	RES 1K 1% .125W	00746	CRB14 OR CRB25
A26R576	0757-0123	3	1	RES 34.8K 1% .12	00746	CRB14 OR CRB25
A26R577	0757-0123	3	1	RES 34.8K 1% .12	00746	CRB14 OR CRB25

Table C-9. 8131A Standard Channel 1 Board Parts List (continued)

Reference	HP Part #	CD	Qty	Description	Manuf'r	Part #
A26R588	0757-0997	9	1	RES 39.2 1% .5W	01074	H2
A26R600	0698-7205	0	1	RES 51.1 1% .05W	00746	CRB20
A26R604	0757-0442	9	1	RES 10K 1% .125W	00746	CRB14 OR CRB25
A26R607	0757-0442	9	1	RES 10K 1% .125W	00746	CRB14 OR CRB25
A26R608	0757-0449	6	1	RES 20K 1% .125W	00746	CRB14 OR CRB25
A26R609	0757-0442	9	1	RES 10K 1% .125W	00746	CRB14 OR CRB25
A26R610	0757-0442	9	1	RES 10K 1% .125W	00746	CRB14 OR CRB25
A26R612	0757-0199	3	1	RES 21.5K 1% .12	00746	CRB14 OR CRB25
A26R613	0698-4425	0	1	RES 1.54K 1% .12	00746	CRB14 OR CRB25
A26R614	0698-6630	3	1	RES 20K .1% .125	00746	CRB14 OR CRB25
A26R615	0698-6624	5	1	RES 2K .1% .125W	00746	CRB14 OR CRB25
A26R617	0698-4437	4	1	RES 2.94K 1% .12	00746	CRB14 OR CRB25
A26R618	0757-0200	7	1	RES 5.62K 1% .12	00746	CRB14 OR CRB25
A26R621	0757-0444	1	1	RES 12.1K 1% .12	00746	CRB14 OR CRB25
A26R622	0757-0283	6	1	RES 2K 1% .125W	00746	CRB14 OR CRB25
A26R624	0757-0442	9	1	RES 10K 1% .125W	00746	CRB14 OR CRB25
A26R625	0757-0280	3	1	RES 1K 1% .125W	00746	CRB14 OR CRB25
A26R626	0757-0442	9	1	RES 10K 1% .125W	00746	CRB14 OR CRB25
A26R628	0757-0441	8	1	RES 8.25K 1% .12	00746	CRB14 OR CRB25
A26R629	0757-0442	9	1	RES 10K 1% .125W	00746	CRB14 OR CRB25
A26R630	0757-0442	9	1	RES 10K 1% .125W	00746	CRB14 OR CRB25
A26R631	0757-0442	9	1	RES 10K 1% .125W	00746	CRB14 OR CRB25
A26R632	0757-0441	8	1	RES 8.25K 1% .12	00746	CRB14 OR CRB25
A26R633	0757-0442	9	1	RES 10K 1% .125W	00746	CRB14 OR CRB25
A26R635	0698-3444	1	1	RES 316 1% .125W	00746	CRB14 OR CRB25
A26R636	0757-0442	9	1	RES 10K 1% .125W	00746	CRB14 OR CRB25
A26R639	0757-0441	8	1	RES 8.25K 1% .12	00746	CRB14 OR CRB25
A26R640	0757-0442	9	1	RES 10K 1% .125W	00746	CRB14 OR CRB25
A26R641	0698-3444	1	1	RES 316 1% .125W	00746	CRB14 OR CRB25
A26R642	0757-0442	9	1	RES 10K 1% .125W	00746	CRB14 OR CRB25
A26R643	0757-0283	6	1	RES 2K 1% .125W	00746	CRB14 OR CRB25

Table C-9. 8131A Standard Channel 1 Board Parts List (continued)

Reference	HP Part #	CD	Qty	Description	Manuf'r	Part #
A26R644	0757-0317	7	1	RES 1.33K 1% .12	00746	CRB14 OR CRB25
A26R645	0757-0200	7	1	RES 5.62K 1% .12	00746	CRB14 OR CRB25
A26R646	0698-4431	8	1	RES 2.05K 1% .12	00746	CRB14 OR CRB25
A26R647	0757-0279	0	1	RES 3.16K 1% .12	00746	CRB14 OR CRB25
A26R648	0698-3496	3	1	RES 3.57K 1% .12	00746	CRB14 OR CRB25
A26R649	0757-0424	7	1	RES 1.1K 1% .125	00746	CRB14 OR CRB25
A26R650	0757-0438	3	1	RES 5.11K 1% .12	00746	CRB14 OR CRB25
A26R651	0757-0999	1	1	RES 47.5 1% .5W	01074	H2
A26R652	0757-0280	3	1	RES 1K 1% .125W	00746	CRB14 OR CRB25
A26R653	0757-0280	3	1	RES 1K 1% .125W	00746	CRB14 OR CRB25
A26R999	0699-1503	1	1	RES .05 100% TKF	00746	MCR18EZHJW00E0
A26RA100	1810-0316	1	1	NETWORK-RES DIP	02483	761-3-R10K
A26RV103	2100-3352	7	1	RES-TRMR 1K 10%	03744	3386X-Y46-102
A26RV104	2100-3349	2	1	RES-TRMR 100 10%	03744	3386X-Y46-101
A26RV123	2100-3207	1	1	RES-TRMR 5K 10%	03744	3386X-Y46-502
A26RV404	2100-0554	5	1	RES-TRMR 500 10%	03744	3386P-Y46-501
A26RV435	2100-3207	1	1	RES-TRMR 5K 10%	03744	3386X-Y46-502
A26RV438	2100-3274	2	1	RES-TRMR 10K 10%	03744	3386X-Y46-103
A26RV455	2100-0567	0	1	RES-TRMR 2K 10%	03744	3386P-Y46-202
A26RV461	2100-3274	2	1	RES-TRMR 10K 10%	03744	3386X-Y46-103
A26RV500	2100-3383	4	1	RES-TRMR 50 10%	03744	3386P-Y46-500
A26RV501	2100-3383	4	1	RES-TRMR 50 10%	03744	3386P-Y46-500
A26RV502	2100-3273	1	1	RES-TRMR 2K 10%	03744	3386X-Y46-202
A26RV503	2100-0567	0	1	RES-TRMR 2K 10%	03744	3386P-Y46-202
A26RV504	2100-3210	6	1	RES-TRMR 10K 10%	03744	3386P-Y46-103
A26TP101	0360-2264	6	1	TERM.-TEST POINT	10358	1095D
A26TP102	0360-2264	6	1	TERM.-TEST POINT	10358	1095D
A26TP103	0360-2264	6	1	TERM.-TEST POINT	10358	1095D
A26TP104	0360-2264	6	1	TERM.-TEST POINT	10358	1095D
A26TP105	0360-2264	6	1	TERM.-TEST POINT	10358	1095D
A26TP106	0360-2264	6	1	TERM.-TEST POINT	10358	1095D

Table C-9. 8131A Standard Channel 1 Board Parts List (continued)

Reference	HP Part #	CD	Qty	Description	Manuf'r	Part #
A26TP107	0360-2264	6	1	TERM.-TEST POINT	10358	1095D
A26TP403	0360-2264	6	1	TERM.-TEST POINT	10358	1095D
A26TP404	0360-2264	6	1	TERM.-TEST POINT	10358	1095D
A26U100	1820-3665	0	1	IC-MM74HCT245N	01698	SN74HCT245N
A26U101	1820-3847	0	1	IC-MM74HCT138N	01698	SN74HCT138N
A26U102	1820-3081	4	1	IC-MC74HC74N	01698	SN74HC74N
A26U103	1820-3298	5	1	IC-MM74HC32N	02037	MC74HC32N
A26U104	1826-0861	4	1	D/A 10-BIT	03285	AD7533LN
A26U105	1826-0861	4	1	D/A 10-BIT	03285	AD7533LN
A26U106	1820-3399	7	1	IC-MC74HC273N	01698	SN74HC273N
A26U107	1826-0877	2	1	A/D 8-BIT	03285	AD7574KN
A26U108	1820-1315	3	1	ANLG MUXR MC1405	02037	MC14051BCP
A26U109	1820-0493	6	1	IC 307	03406	LM307N
A26U110	1820-3847	0	1	IC-MM74HCT138N	01698	SN74HCT138N
A26U111	1820-3082	5	1	IC-MC74HC374N	01698	SN74HC374N
A26U112	1826-0285	6	1	IC MC79L05ACP	02037	MC79L05ACP
A26U113	1826-0315	3	1	IC 348	03406	LM348N
A26U114	1826-0161	7	1	IC 324	02037	LM324N
A26U115	1820-3097	2	1	IC-MM74HC08N	02037	MC74HC08N
A26U117	1820-3373	7	1	IC-MM74HC221AN	03406	MM74HC221AN
A26U118	1820-0493	6	1	IC 307	03406	LM307N
A26U120	1820-2924	2	1	IC-MC74HC02N	01698	SN74HC02N
A26U121	1820-3081	4	1	IC-MC74HC74N	01698	SN74HC74N
A26U122	1820-3082	5	1	IC-MC74HC374N	01698	SN74HC374N
A26U123	1820-3081	4	1	IC-MC74HC74N	01698	SN74HC74N
A26U124	1820-3081	4	1	IC-MC74HC74N	01698	SN74HC74N
A26U126	1820-3081	4	1	IC-MC74HC74N	01698	SN74HC74N
A26U401	1NB7-8179	7	1	HYRIDS	28480	1NB7-8179
A26U402	1826-0524	6	1	IC 324A	03406	LM324AN
A26U403	1826-0207	2	1	IC 318	01698	LM318P

Table C-9. 8131A Standard Channel 1 Board Parts List (continued)

Reference	HP Part #	CD	Qty	Description	Manuf'r	Part #
A26U404	1826-0138	8	1	IC 339	01698	LM339N
A26U405	1826-1460	1	1	IC 201	03406	LM201AN
A26U406	1820-0493	6	1	IC 307	03406	LM307N
A26U407	1826-0161	7	1	IC 324	02037	LM324N
A26U408	1826-0207	2	1	IC 318	01698	LM318P
A26U409	1826-0161	7	1	IC 324	02037	LM324N
A26U410	1858-0058	8	1	XSTR ARY 14P-DIP	02037	MPQ3906
A26U411	1858-0087	3	1	XSTR ARY 14P-DIP	02037	MPQ3904
A26U412	1858-0087	3	1	XSTR ARY 14P-DIP	02037	MPQ3904
A26U413	1858-0087	3	1	XSTR ARY 14P-DIP	02037	MPQ3904
A26U415	1826-0600	9	1	IC 074A	01698	TL074ACN
A26U416	1858-0087	3	1	XSTR ARY 14P-DIP	02037	MPQ3904
A26U417	1826-0161	7	1	IC 324	02037	LM324N
A26U418	1858-0087	3	1	XSTR ARY 14P-DIP	02037	MPQ3904
A26U601	1826-0315	3	1	IC 348	03406	LM348N
A26U602	1826-0315	3	1	IC 348	03406	LM348N
A26U603	1826-0161	7	1	IC 324	02037	LM324N
A26VR101	1902-0956	0	1	DIO-ZNR 8.2V 5%	02037	
A26VR403	1902-0963	9	1	DIO-ZNR 16V 5%	02037	SZ30035-21RL
A26VR404	1902-0956	0	1	DIO-ZNR 8.2V 5%	02037	
A26VR405	1902-0956	0	1	DIO-ZNR 8.2V 5%	02037	
A26VR406	1902-0949	1	1	DIO-ZNR 4.3V 5%	02037	
A26VR407	1902-0945	7	1	DIO-ZNR 3V 5%	02037	SZ0035-3RL
A26VR409	1902-0951	5	1	DIO-ZNR 5.1V 5%	02037	SZ30035-9RL
A26VR412	1902-0950	4	1	DIO-ZNR 4.7V 5%	02037	
A26VR415	1902-0950	4	1	DIO-ZNR 4.7V 5%	02037	
A26VR417	1902-0963	9	1	DIO-ZNR 16V 5%	02037	SZ30035-21RL
A26VR419	1902-0953	7	1	DIO-ZNR 6.2V 5%	02037	SZ30035-11RL
A26VR495	1902-0951	5	1	DIO-ZNR 5.1V 5%	02037	SZ30035-9RL
A26VR602	1902-0953	7	1	DIO-ZNR 6.2V 5%	02037	SZ30035-11RL

Table C-9. 8131A Standard Channel 1 Board Parts List (continued)

Reference	HP Part #	CD	Qty	Description	Manuf'r	Part #
A26VR603	1902-0958	2	1	DIO-ZNR 10V 5%	02037	
A26VR604	1902-0945	7	1	DIO-ZNR 3V 5%	02037	SZ0035-3RL
A26W103	1258-0141	8	1	JUMPER-REM	01380	530153-2
A26W201	08131-61681	1	1	CBL AY TRAN 1	28480	08131-61681
A26W403	08131-61607	1	1	CBL SEMI RIGID	28480	08131-61607
A26W404	08131-61607	1	1	CBL SEMI RIGID	28480	08131-61607

Master List
Option 020

Table C-10. 8131A Option 020 Instrument Parts List

Reference	HP Part #	CD	Qty	Description	Manuf'r	Part #
A0 A1	08131-66521	8	1	BD AY KEY OPT	28480	08131-66521
A0 A5	08131-66525	2	1	BD AY TIMING OPT	28480	08131-66525
A0 A26	08131-66527	4	1	BD AY CHAN 1	28480	08131-66527
A0 A28	08131-66528	5	1	BD AY CHAN 2	28480	08131-66528
A0 MP12	08131-21701	2	2	SMA-BUSHING	28480	08131-21701
A0 MP13	08131-40201	7	1	FRONT PANEL OPT	28480	08131-40201
A0 W12	08131-61603	7	1	CBL AY OUTPUT	28480	08131-61603
A0 W13	08131-61603	7	1	CBL AY OUTPUT	28480	08131-61603

Table C-11. 8131A Option 020 Keyboard Parts List

Reference	HP Part #	CD	Qty	Description	Manuf'r	Part #
A1	08131-66521	8	1	BD AY KEY OPT	28480	08131-66521
A1 C2	0160-6623	5	1	CAP 0.1uF 50 V	02010	SA115C104MAAH
A1 C3	0160-6623	5	1	CAP 0.1uF 50 V	02010	SA115C104MAAH
A1 C4	0160-6623	5	1	CAP 0.1uF 50 V	02010	SA115C104MAAH
A1 CP1	0180-2207	5	1	CAP 100uF 10 V	04200	150D107X9010R2-DYS
A1 DS1	1990-1253	7	1	DISPLAY-NUM-SEG	01542	HDSP-H101
A1 DS2	1990-1253	7	1	DISPLAY-NUM-SEG	01542	HDSP-H101
A1 DS3	1990-1253	7	1	DISPLAY-NUM-SEG	01542	HDSP-H101
A1 DS4	1990-1253	7	1	DISPLAY-NUM-SEG	01542	HDSP-H101
A1 DS5	1990-1252	6	1	LED-LT BAR	01542	HLCP-B100
A1 DS6	1990-1278	6	1	LED-LMP	01542	HLMP-K155
A1 DS7	1990-1278	6	1	LED-LMP	01542	HLMP-K155
A1 DS8	1990-1254	8	1	LED-LMP	01542	HLMP-Q150 SELECTED
A1 DS11	1990-1254	8	1	LED-LMP	01542	HLMP-Q150 SELECTED
A1 DS12	1990-1254	8	1	LED-LMP	01542	HLMP-Q150 SELECTED
A1 DS13	1990-1254	8	1	LED-LMP	01542	HLMP-Q150 SELECTED
A1 DS14	1990-1254	8	1	LED-LMP	01542	HLMP-Q150 SELECTED
A1 DS15	1990-1254	8	1	LED-LMP	01542	HLMP-Q150 SELECTED
A1 DS16	1990-1254	8	1	LED-LMP	01542	HLMP-Q150 SELECTED
A1 DS17	1990-1254	8	1	LED-LMP	01542	HLMP-Q150 SELECTED
A1 DS18	1990-1254	8	1	LED-LMP	01542	HLMP-Q150 SELECTED
A1 DS21	1990-1278	6	1	LED-LMP	01542	HLMP-K155
A1 DS22	1990-1278	6	1	LED-LMP	01542	HLMP-K155
A1 DS23	1990-1278	6	1	LED-LMP	01542	HLMP-K155
A1 DS24	1990-1278	6	1	LED-LMP	01542	HLMP-K155
A1 DS25	1990-1278	6	1	LED-LMP	01542	HLMP-K155

Table C-11. 8131A Option 020 Keyboard Parts List (continued)

Reference	HP Part #	CD	Qty	Description	Manuf'r	Part #
A1 DS26	1990-1278	6	1	LED-LMP	01542	HLMP-K155
A1 DS27	1990-1278	6	1	LED-LMP	01542	HLMP-K155
A1 DS28	1990-1278	6	1	LED-LMP	01542	HLMP-K155
A1 DS31	1990-1254	8	1	LED-LMP	01542	HLMP-Q150 SELECTED
A1 DS32	1990-1254	8	1	LED-LMP	01542	HLMP-Q150 SELECTED
A1 DS33	1990-1254	8	1	LED-LMP	01542	HLMP-Q150 SELECTED
A1 DS34	1990-1254	8	1	LED-LMP	01542	HLMP-Q150 SELECTED
A1 DS35	1990-1254	8	1	LED-LMP	01542	HLMP-Q150 SELECTED
A1 DS36	1990-1254	8	1	LED-LMP	01542	HLMP-Q150 SELECTED
A1 DS37	1990-1254	8	1	LED-LMP	01542	HLMP-Q150 SELECTED
A1 DS38	1990-1254	8	1	LED-LMP	01542	HLMP-Q150 SELECTED
A1 DS41	1990-1278	6	1	LED-LMP	01542	HLMP-K155
A1 DS42	1990-1278	6	1	LED-LMP	01542	HLMP-K155
A1 DS43	1990-1278	6	1	LED-LMP	01542	HLMP-K155
A1 DS44	1990-1278	6	1	LED-LMP	01542	HLMP-K155
A1 DS45	1990-1278	6	1	LED-LMP	01542	HLMP-K155
A1 DS46	1990-1278	6	1	LED-LMP	01542	HLMP-K155
A1 DS47	1990-1278	6	1	LED-LMP	01542	HLMP-K155
A1 DS48	1990-1278	6	1	LED-LMP	01542	HLMP-K155
A1 DS51	1990-1278	6	1	LED-LMP	01542	HLMP-K155
A1 DS52	1990-1278	6	1	LED-LMP	01542	HLMP-K155
A1 DS53	1990-1278	6	1	LED-LMP	01542	HLMP-K155
A1 DS54	1990-1278	6	1	LED-LMP	01542	HLMP-K155
A1 DS55	1990-1278	6	1	LED-LMP	01542	HLMP-K155
A1 DS56	1990-1278	6	1	LED-LMP	01542	HLMP-K155
A1 DS57	1990-1278	6	1	LED-LMP	01542	HLMP-K155
A1 DS61	1990-1254	8	1	LED-LMP	01542	HLMP-Q150 SELECTED
A1 DS62	1990-1254	8	1	LED-LMP	01542	HLMP-Q150 SELECTED
A1 DS63	1990-1254	8	1	LED-LMP	01542	HLMP-Q150 SELECTED
A1 DS64	1990-1254	8	1	LED-LMP	01542	HLMP-Q150 SELECTED

Table C-11. 8131A Option 020 Keyboard Parts List (continued)

Reference	HP Part #	CD	Qty	Description	Manuf'r	Part #
A1 DS65	1990-1278	6	1	LED-LMP	01542	HLMP-K155
A1 DS71	1990-1278	6	1	LED-LMP	01542	HLMP-K155
A1 DS72	1990-1278	6	1	LED-LMP	01542	HLMP-K155
A1 DS73	1990-1278	6	1	LED-LMP	01542	HLMP-K155
A1 DS74	1990-1278	6	1	LED-LMP	01542	HLMP-K155
A1 DS75	1990-1278	6	1	LED-LMP	01542	HLMP-K155
A1 DS76	1990-1278	6	1	LED-LMP	01542	HLMP-K155
A1 DS77	1990-1278	6	1	LED-LMP	01542	HLMP-K155
A1 J1	1252-0217	7	1	CONN-POST-TP-HDR	04726	3429-5202
A1 MP1	5041-4707	5	8	QTR COBLK	28480	5041-4707
A1 MP2	5041-0318	6	1	LK CAP PTY GRAY	28480	5041-0318
A1 MP3	5041-0309	5	5	CAP KEY QUARTER	28480	5041-0309
A1 MP4	5041-0507	5	1	QTR WGRN	28480	5041-0507
A1 MP5	5041-0726	0	1	KEY CAP LCL	28480	5041-0726
A1 MP6	1200-0654	7	1	SKT-IC 40-CONT	01380	2-641606-1
A1 MP7	1200-0899	2	1	SKT-STRP 8-CONT	04129	8-0511-10
A1 RA1	1810-0325	2	1	NETWORK-RES DIP	02483	761-3-R150
A1 RA2	1810-0338	7	1	NETWORK-RES DIP	02483	761-3-R100
A1 RA3	1810-0338	7	1	NETWORK-RES DIP	02483	761-3-R100
A1 RA4	1810-0275	1	1	NETWORK-RES SIP	02483	750-101
A1 RA5	1810-0275	1	1	NETWORK-RES SIP	02483	750-101
A1 S1	5060-9436	7	1	SW-PB SPST NO	04486	5560-9436
A1 S2	5060-9436	7	1	SW-PB SPST NO	04486	5560-9436
A1 S3	5060-9436	7	1	SW-PB SPST NO	04486	5560-9436
A1 S4	5060-9436	7	1	SW-PB SPST NO	04486	5560-9436
A1 S5	5060-9436	7	1	SW-PB SPST NO	04486	5560-9436
A1 S6	5060-9436	7	1	SW-PB SPST NO	04486	5560-9436
A1 S7	5060-9436	7	1	SW-PB SPST NO	04486	5560-9436
A1 S8	5060-9436	7	1	SW-PB SPST NO	04486	5560-9436
A1 S11	5060-9436	7	1	SW-PB SPST NO	04486	5560-9436

Table C-11. 8131A Option 020 Keyboard Parts List (continued)

Reference	HP Part #	CD	Qty	Description	Manuf'r	Part #
A1 S12	5060-9436	7	1	SW-PB SPST NO	04486	5560-9436
A1 S13	5060-9436	7	1	SW-PB SPST NO	04486	5560-9436
A1 S14	5060-9436	7	1	SW-PB SPST NO	04486	5560-9436
A1 S15	5060-9436	7	1	SW-PB SPST NO	04486	5560-9436
A1 S16	5060-9436	7	1	SW-PB SPST NO	04486	5560-9436
A1 S17	5060-9436	7	1	SW-PB SPST NO	04486	5560-9436
A1 S18	5060-9436	7	1	SW-PB SPST NO	04486	5560-9436
A1 S21	5060-9436	7	1	SW-PB SPST NO	04486	5560-9436
A1 S22	5060-9436	7	1	SW-PB SPST NO	04486	5560-9436
A1 S23	5060-9436	7	1	SW-PB SPST NO	04486	5560-9436
A1 S24	5060-9436	7	1	SW-PB SPST NO	04486	5560-9436
A1 S25	5060-9436	7	1	SW-PB SPST NO	04486	5560-9436
A1 S26	5060-9436	7	1	SW-PB SPST NO	04486	5560-9436
A1 S27	5060-9436	7	1	SW-PB SPST NO	04486	5560-9436
A1 S28	5060-9436	7	1	SW-PB SPST NO	04486	5560-9436
A1 S41	5060-9436	7	1	SW-PB SPST NO	04486	5560-9436
A1 S42	5060-9436	7	1	SW-PB SPST NO	04486	5560-9436
A1 S43	5060-9436	7	1	SW-PB SPST NO	04486	5560-9436
A1 S44	5060-9436	7	1	SW-PB SPST NO	04486	5560-9436
A1 S45	5060-9436	7	1	SW-PB SPST NO	04486	5560-9436
A1 S46	5060-9436	7	1	SW-PB SPST NO	04486	5560-9436
A1 S47	5060-9436	7	1	SW-PB SPST NO	04486	5560-9436
A1 S48	5060-9436	7	1	SW-PB SPST NO	04486	5560-9436
A1 S51	5060-9436	7	1	SW-PB SPST NO	04486	5560-9436
A1 S52	5060-9436	7	1	SW-PB SPST NO	04486	5560-9436
A1 S53	5060-9436	7	1	SW-PB SPST NO	04486	5560-9436
A1 S54	5060-9436	7	1	SW-PB SPST NO	04486	5560-9436
A1 U1	1820-3847	0	1	IC-MM74HCT138N	01698	SN74HCT138N
A1 U2	1820-3847	0	1	IC-MM74HCT138N	01698	SN74HCT138N
A1 U3	1820-3847	0	1	IC-MM74HCT138N	01698	SN74HCT138N

Table C-11. 8131A Option 020 Keyboard Parts List (continued)

Reference	HP Part #	CD	Qty	Description	Manuf'r	Part #
A1 U4	1820-3456	7	1	IC-MM74HCT244N	01698	SN74HCT244N
A1 U5	1820-3456	7	1	IC-MM74HCT244N	01698	SN74HCT244N
A1 U6	1858-0014	6	1	XSTR ARY 14P-DIP	02037	
A1 U7	1858-0014	6	1	XSTR ARY 14P-DIP	02037	
A1 U8	1858-0014	6	1	XSTR ARY 14P-DIP	02037	

Timing Board
Option 020

Table C-12. 8131A Option 020 Timing Board Parts List

Reference	HP Part #	CD	Qty	Description	Manuf'r	Part #
A5	08131-66525	2	1	BD AY TIMING OPT	28480	08131-66525
A5 C101	0160-5750	7	1	CAP 2200pF 100 V	06121	B37981-J1222-M034
A5 C103	0160-5750	7	1	CAP 2200pF 100 V	06121	B37981-J1222-M034
A5 C105	0160-5750	7	1	CAP 2200pF 100 V	06121	B37981-J1222-M034
A5 C107	0160-5750	7	1	CAP 2200pF 100 V	06121	B37981-J1222-M034
A5 C109	0160-5750	7	1	CAP 2200pF 100 V	06121	B37981-J1222-M034
A5 C110	0160-6623	5	1	CAP 0.1uF 50 V	02010	SA115C104MAAH
A5 C111	0160-6623	5	1	CAP 0.1uF 50 V	02010	SA115C104MAAH
A5 C112	0160-6623	5	1	CAP 0.1uF 50 V	02010	SA115C104MAAH
A5 C113	0160-6623	5	1	CAP 0.1uF 50 V	02010	SA115C104MAAH
A5 C117	0160-6623	5	1	CAP 0.1uF 50 V	02010	SA115C104MAAH
A5 C121	0160-6623	5	1	CAP 0.1uF 50 V	02010	SA115C104MAAH
A5 C122	0160-6623	5	1	CAP 0.1uF 50 V	02010	SA115C104MAAH
A5 C126	0160-6623	5	1	CAP 0.1uF 50 V	02010	SA115C104MAAH
A5 C127	0160-6623	5	1	CAP 0.1uF 50 V	02010	SA115C104MAAH
A5 C131	0160-6623	5	1	CAP 0.1uF 50 V	02010	SA115C104MAAH
A5 C140	0160-6623	5	1	CAP 0.1uF 50 V	02010	SA115C104MAAH
A5 C141	0160-6623	5	1	CAP 0.1uF 50 V	02010	SA115C104MAAH
A5 C142	0160-6623	5	1	CAP 0.1uF 50 V	02010	SA115C104MAAH
A5 C181	0160-5746	1	1	CAP 0.1uF 50 V	06121	B37987-T5104-M11
A5 C202	0160-6623	5	1	CAP 0.1uF 50 V	02010	SA115C104MAAH
A5 C203	0160-6623	5	1	CAP 0.1uF 50 V	02010	SA115C104MAAH
A5 C204	0160-6623	5	1	CAP 0.1uF 50 V	02010	SA115C104MAAH
A5 C205	0160-6500	7	1	CAP 0.01uF 100 V	02010	SA101C103KAAH

Table C-12. 8131A Option 020 Timing Board Parts List (continued)

Reference	HP Part #	CD	Qty	Description	Manuf'r	Part #
A5 C206	0160-6500	7	1	CAP 0.01uF 100 V	02010	SA101C103KAAH
A5 C207	0160-6623	5	1	CAP 0.1uF 50 V	02010	SA115C104MAAH
A5 C208	0160-6623	5	1	CAP 0.1uF 50 V	02010	SA115C104MAAH
A5 C209	0160-6500	7	1	CAP 0.01uF 100 V	02010	SA101C103KAAH
A5 C210	0160-6500	7	1	CAP 0.01uF 100 V	02010	SA101C103KAAH
A5 C220	0160-6500	7	1	CAP 0.01uF 100 V	02010	SA101C103KAAH
A5 C221	0160-6500	7	1	CAP 0.01uF 100 V	02010	SA101C103KAAH
A5 C222	0160-6500	7	1	CAP 0.01uF 100 V	02010	SA101C103KAAH
A5 C223	0160-5726	7	1	CAP 0.01uF 100 V	06121	B37987-J1103-M034
A5 C224	0160-5726	7	1	CAP 0.01uF 100 V	06121	B37987-J1103-M034
A5 C300	0160-5746	1	1	CAP 0.1uF 50 V	06121	B37987-T5104-M11
A5 C301	0160-6623	5	1	CAP 0.1uF 50 V	02010	SA115C104MAAH
A5 C303	0160-4535	4	1	CAP 1uF 50 V	02010	SR305C105KAAH
A5 C304	0160-5746	1	1	CAP 0.1uF 50 V	06121	B37987-T5104-M11
A5 C305	0160-5746	1	1	CAP 0.1uF 50 V	06121	B37987-T5104-M11
A5 C306	0160-5726	7	1	CAP 0.01uF 100 V	06121	B37987-J1103-M034
A5 C307	0160-6623	5	1	CAP 0.1uF 50 V	02010	SA115C104MAAH
A5 C308	0160-6623	5	1	CAP 0.1uF 50 V	02010	SA115C104MAAH
A5 C309	0160-6623	5	1	CAP 0.1uF 50 V	02010	SÁ115C104MAAH
A5 C310	0160-6623	5	1	CAP 0.1uF 50 V	02010	SA115C104MAAH
A5 C311	0160-5726	7	1	CAP 0.01uF 100 V	06121	B37987-J1103-M034
A5 C312	0160-6500	7	1	CAP 0.01uF 100 V	02010	SA101C103KAAH
A5 C313	0160-6500	7	1	CAP 0.01uF 100 V	02010	SA101C103KAAH
A5 C314	0160-6623	5	1	CAP 0.1uF 50 V	02010	SA115C104MAAH
A5 C315	0160-6623	5	1	CAP 0.1uF 50 V	02010	SA115C104MAAH
A5 C317	0160-6623	5	1	CAP 0.1uF 50 V	02010	SA115C104MAAH
A5 C318	0160-6623	5	1	CAP 0.1uF 50 V	02010	SA115C104MAAH
A5 C320	0160-6623	5	1	CAP 0.1uF 50 V	02010	SA115C104MAAH
A5 C321	0160-6500	7	1	CAP 0.01uF 100 V	02010	SA101C103KAAH
A5 C322	0160-6500	7	1	CAP 0.01uF 100 V	02010	SA101C103KAAH

Table C-12. 8131A Option 020 Timing Board Parts List (continued)

Reference	HP Part #	CD	Qty	Description	Manuf'r	Part #
A5 C324	0160-6623	5	1	CAP 0.1uF 50 V	02010	SA115C104MAAH
A5 C325	0160-5746	1	1	CAP 0.1uF 50 V	06121	B37987-T5104-M11
A5 C327	0160-6500	7	1	CAP 0.01uF 100 V	02010	SA101C103KAAH
A5 C328	0160-6500	7	1	CAP 0.01uF 100 V	02010	SA101C103KAAH
A5 C330	0160-6623	5	1	CAP 0.1uF 50 V	02010	SA115C104MAAH
A5 C331	0160-6623	5	1	CAP 0.1uF 50 V	02010	SA115C104MAAH
A5 C333	0160-6623	5	1	CAP 0.1uF 50 V	02010	SA115C104MAAH
A5 C335	0160-4535	4	1	CAP 1uF 50 V	02010	SR305C105KAAH
A5 C336	0160-6623	5	1	CAP 0.1uF 50 V	02010	SA115C104MAAH
A5 C340	0160-6623	5	1	CAP 0.1uF 50 V	02010	SA115C104MAAH
A5 C341	0160-5726	7	1	CAP 0.01uF 100 V	06121	B37987-J1103-M034
A5 C342	0160-6500	7	1	CAP 0.01uF 100 V	02010	SA101C103KAAH
A5 C343	0160-6500	7	1	CAP 0.01uF 100 V	02010	SA101C103KAAH
A5 C350	0160-6623	5	1	CAP 0.1uF 50 V	02010	SA115C104MAAH
A5 C360	0160-6623	5	1	CAP 0.1uF 50 V	02010	SA115C104MAAH
A5 C363	0160-6623	5	1	CAP 0.1uF 50 V	02010	SA115C104MAAH
A5 C399	0160-5741	6	1	CAP 47pF 100 V	06121	B37979-J1470-J034
A5 C400	0160-5746	1	1	CAP 0.1uF 50 V	06121	B37987-T5104-M11
A5 C401	0160-5746	1	1	CAP 0.1uF 50 V	06121	B37987-T5104-M11
A5 C403	0160-4535	4	1	CAP 1uF 50 V	02010	SR305C105KAAH
A5 C404	0160-6623	5	1	CAP 0.1uF 50 V	02010	SA115C104MAAH
A5 C405	0160-5746	1	1	CAP 0.1uF 50 V	06121	B37987-T5104-M11
A5 C406	0160-5726	7	1	CAP 0.01uF 100 V	06121	B37987-J1103-M034
A5 C411	0160-5726	7	1	CAP 0.01uF 100 V	06121	B37987-J1103-M034
A5 C412	0160-6500	7	1	CAP 0.01uF 100 V	02010	SA101C103KAAH
A5 C413	0160-6500	7	1	CAP 0.01uF 100 V	02010	SA101C103KAAH
A5 C414	0160-6623	5	1	CAP 0.1uF 50 V	02010	SA115C104MAAH
A5 C415	0160-6623	5	1	CAP 0.1uF 50 V	02010	SA115C104MAAH
A5 C417	0160-6623	5	1	CAP 0.1uF 50 V	02010	SA115C104MAAH
A5 C418	0160-6623	5	1	CAP 0.1uF 50 V	02010	SA115C104MAAH

Table C-12. 8131A Option 020 Timing Board Parts List (continued)

Reference	HP Part #	CD	Qty	Description	Manuf'r	Part #
A5 C420	0160-6623	5	1	CAP 0.1uF 50 V	02010	SA115C104MAAH
A5 C421	0160-6500	7	1	CAP 0.01uF 100 V	02010	SA101C103KAAH
A5 C422	0160-6500	7	1	CAP 0.01uF 100 V	02010	SA101C103KAAH
A5 C424	0160-6623	5	1	CAP 0.1uF 50 V	02010	SA115C104MAAH
A5 C425	0160-5746	1	1	CAP 0.1uF 50 V	06121	B37987-T5104-M11
A5 C427	0160-6500	7	1	CAP 0.01uF 100 V	02010	SA101C103KAAH
A5 C428	0160-6500	7	1	CAP 0.01uF 100 V	02010	SA101C103KAAH
A5 C430	0160-6623	5	1	CAP 0.1uF 50 V	02010	SA115C104MAAH
A5 C431	0160-6623	5	1	CAP 0.1uF 50 V	02010	SA115C104MAAH
A5 C433	0160-6623	5	1	CAP 0.1uF 50 V	02010	SA115C104MAAH
A5 C435	0160-4535	4	1	CAP 1uF 50 V	02010	SR305C105KAAH
A5 C436	0160-6623	5	1	CAP 0.1uF 50 V	02010	SA115C104MAAH
A5 C440	0160-6623	5	1	CAP 0.1uF 50 V	02010	SA115C104MAAH
A5 C441	0160-5726	7	1	CAP 0.01uF 100 V	06121	B37987-J1103-M034
A5 C442	0160-6500	7	1	CAP 0.01uF 100 V	02010	SA101C103KAAH
A5 C443	0160-6500	7	1	CAP 0.01uF 100 V	02010	SA101C103KAAH
A5 C450	0160-6623	5	1	CAP 0.1uF 50 V	02010	SA115C104MAAH
A5 C460	0160-6623	5	1	CAP 0.1uF 50 V	02010	SA115C104MAAH
A5 C465	0160-6623	5	1	CAP 0.1uF 50 V	02010	SA115C104MAAH
A5 C470	0160-3872	0	1	CAP 2.2pF 200 V	06352	FD12C0G2D2R2C
A5 C471	0160-3872	0	1	CAP 2.2pF 200 V	06352	FD12C0G2D2R2C
A5 C500	0160-5746	1	1	CAP 0.1uF 50 V	06121	B37987-T5104-M11
A5 C501	0160-5746	1	1	CAP 0.1uF 50 V	06121	B37987-T5104-M11
A5 C503	0160-4535	4	1	CAP 1uF 50 V	02010	SR305C105KAAH
A5 C504	0160-5746	1	1	CAP 0.1uF 50 V	06121	B37987-T5104-M11
A5 C505	0160-6623	5	1	CAP 0.1uF 50 V	02010	SA115C104MAAH
A5 C506	0160-5726	7	1	CAP 0.01uF 100 V	06121	B37987-J1103-M034
A5 C511	0160-5726	7	1	CAP 0.01uF 100 V	06121	B37987-J1103-M034
A5 C512	0160-6500	7	1	CAP 0.01uF 100 V	02010	SA101C103KAAH
A5 C513	0160-6500	7	1	CAP 0.01uF 100 V	02010	SA101C103KAAH

Table C-12. 8131A Option 020 Timing Board Parts List (continued)

Reference	HP Part #	CD	Qty	Description	Manuf'r	Part #
A5 C514	0160-6623	5	1	CAP 0.1uF 50 V	02010	SA115C104MAAH
A5 C515	0160-6623	5	1	CAP 0.1uF 50 V	02010	SA115C104MAAH
A5 C517	0160-6623	5	1	CAP 0.1uF 50 V	02010	SA115C104MAAH
A5 C518	0160-6623	5	1	CAP 0.1uF 50 V	02010	SA115C104MAAH
A5 C520	0160-6623	5	1	CAP 0.1uF 50 V	02010	SA115C104MAAH
A5 C521	0160-6500	7	1	CAP 0.01uF 100 V	02010	SA101C103KAAH
A5 C522	0160-6500	7	1	CAP 0.01uF 100 V	02010	SA101C103KAAH
A5 C524	0160-6623	5	1	CAP 0.1uF 50 V	02010	SA115C104MAAH
A5 C525	0160-5746	1	1	CAP 0.1uF 50 V	06121	B37987-T5104-M11
A5 C527	0160-6500	7	1	CAP 0.01uF 100 V	02010	SA101C103KAAH
A5 C528	0160-6500	7	1	CAP 0.01uF 100 V	02010	SA101C103KAAH
A5 C530	0160-6623	5	1	CAP 0.1uF 50 V	02010	SA115C104MAAH
A5 C531	0160-6623	5	1	CAP 0.1uF 50 V	02010	SA115C104MAAH
A5 C533	0160-6623	5	1	CAP 0.1uF 50 V	02010	SA115C104MAAH
A5 C535	0160-4535	4	1	CAP 1uF 50 V	02010	SR305C105KAAH
A5 C536	0160-6623	5	1	CAP 0.1uF 50 V	02010	SA115C104MAAH
A5 C540	0160-6623	5	1	CAP 0.1uF 50 V	02010	SA115C104MAAH
A5 C541	0160-5726	7	1	CAP 0.01uF 100 V	06121	B37987-J1103-M034
A5 C542	0160-6500	7	1	CAP 0.01uF 100 V	02010	SA101C103KAAH
A5 C543	0160-6500	7	1	CAP 0.01uF 100 V	02010	SA101C103KAAH
A5 C550	0160-6623	5	1	CAP 0.1uF 50 V	02010	SA115C104MAAH
A5 C560	0160-6623	5	1	CAP 0.1uF 50 V	02010	SA115C104MAAH
A5 C565	0160-6623	5	1	CAP 0.1uF 50 V	02010	SA115C104MAAH
A5 C570	0160-3872	0	1	CAP 2.2pF 200 V	06352	FD12C0G2D2R2C
A5 C571	0160-3872	0	1	CAP 2.2pF 200 V	06352	FD12C0G2D2R2C
A5 C600	0160-5746	1	1	CAP 0.1uF 50 V	06121	B37987-T5104-M11
A5 C601	0160-5746	1	1	CAP 0.1uF 50 V	06121	B37987-T5104-M11
A5 C603	0160-4535	4	1	CAP 1uF 50 V	02010	SR305C105KAAH
A5 C604	0160-5746	1	1	CAP 0.1uF 50 V	06121	B37987-T5104-M11
A5 C605	0160-6623	5	1	CAP 0.1uF 50 V	02010	SA115C104MAAH

Table C-12. 8131A Option 020 Timing Board Parts List (continued)

Reference	HP Part #	CD	Qty	Description	Manuf'r	Part #
A5 C606	0160-5726	7	1	CAP 0.01uF 100 V	06121	B37987-J1103-M034
A5 C611	0160-5726	7	1	CAP 0.01uF 100 V	06121	B37987-J1103-M034
A5 C612	0160-6500	7	1	CAP 0.01uF 100 V	02010	SA101C103KAAH
A5 C613	0160-6500	7	1	CAP 0.01uF 100 V	02010	SA101C103KAAH
A5 C614	0160-6623	5	1	CAP 0.1uF 50 V	02010	SA115C104MAAH
A5 C615	0160-6623	5	1	CAP 0.1uF 50 V	02010	SA115C104MAAH
A5 C617	0160-6623	5	1	CAP 0.1uF 50 V	02010	SA115C104MAAH
A5 C618	0160-6623	5	1	CAP 0.1uF 50 V	02010	SA115C104MAAH
A5 C620	0160-6623	5	1	CAP 0.1uF 50 V	02010	SA115C104MAAH
A5 C621	0160-6500	7	1	CAP 0.01uF 100 V	02010	SA101C103KAAH
A5 C622	0160-6500	7	1	CAP 0.01uF 100 V	02010	SA101C103KAAH
A5 C624	0160-6623	5	1	CAP 0.1uF 50 V	02010	SA115C104MAAH
A5 C625	0160-5746	1	1	CAP 0.1uF 50 V	06121	B37987-T5104-M11
A5 C627	0160-6500	7	1	CAP 0.01uF 100 V	02010	SA101C103KAAH
A5 C628	0160-6500	7	1	CAP 0.01uF 100 V	02010	SA101C103KAAH
A5 C630	0160-6623	5	1	CAP 0.1uF 50 V	02010	SA115C104MAAH
A5 C631	0160-6623	5	1	CAP 0.1uF 50 V	02010	SA115C104MAAH
A5 C633	0160-6623	5	1	CAP 0.1uF 50 V	02010	SA115C104MAAH
A5 C635	0160-4535	4	1	CAP 1uF 50 V	02010	SR305C105KAAH
A5 C636	0160-6623	5	1	CAP 0.1uF 50 V	02010	SA115C104MAAH
A5 C640	0160-6623	5	1	CAP 0.1uF 50 V	02010	SA115C104MAAH
A5 C641	0160-5726	7	1	CAP 0.01uF 100 V	06121	B37987-J1103-M034
A5 C642	0160-6500	7	1	CAP 0.01uF 100 V	02010	SA101C103KAAH
A5 C643	0160-6500	7	1	CAP 0.01uF 100 V	02010	SA101C103KAAH
A5 C650	0160-6623	5	1	CAP 0.1uF 50 V	02010	SA115C104MAAH
A5 C660	0160-6623	5	1	CAP 0.1uF 50 V	02010	SA115C104MAAH
A5 C665	0160-6623	5	1	CAP 0.1uF 50 V	02010	SA115C104MAAH
A5 C670	0160-3872	0	1	CAP 2.2pF 200 V	06352	FD12C0G2D2R2C
A5 C671	0160-3872	0	1	CAP 2.2pF 200 V	06352	FD12C0G2D2R2C
A5 C700	0160-5746	1	1	CAP 0.1uF 50 V	06121	B37987-T5104-M11

Table C-12. 8131A Option 020 Timing Board Parts List (continued)

Reference	HP Part #	CD	Qty	Description	Manuf'r	Part #
A5 C701	0160-5746	1	1	CAP 0.1uF 50 V	06121	B37987-T5104-M11
A5 C703	0160-4535	4	1	CAP 1uF 50 V	02010	SR305C105KAAH
A5 C704	0160-5746	1	1	CAP 0.1uF 50 V	06121	B37987-T5104-M11
A5 C705	0160-5746	1	1	CAP 0.1uF 50 V	06121	B37987-T5104-M11
A5 C706	0160-5726	7	1	CAP 0.01uF 100 V	06121	B37987-J1103-M034
A5 C711	0160-5726	7	1	CAP 0.01uF 100 V	06121	B37987-J1103-M034
A5 C712	0160-6500	7	1	CAP 0.01uF 100 V	02010	SA101C103KAAH
A5 C713	0160-6500	7	1	CAP 0.01uF 100 V	02010	SA101C103KAAH
A5 C714	0160-6623	5	1	CAP 0.1uF 50 V	02010	SA115C104MAAH
A5 C715	0160-6623	5	1	CAP 0.1uF 50 V	02010	SA115C104MAAH
A5 C717	0160-6623	5	1	CAP 0.1uF 50 V	02010	SA115C104MAAH
A5 C718	0160-6623	5	1	CAP 0.1uF 50 V	02010	SA115C104MAAH
A5 C720	0160-6623	5	1	CAP 0.1uF 50 V	02010	SA115C104MAAH
A5 C721	0160-6500	7	1	CAP 0.01uF 100 V	02010	SA101C103KAAH
A5 C722	0160-6500	7	1	CAP 0.01uF 100 V	02010	SA101C103KAAH
A5 C724	0160-6623	5	1	CAP 0.1uF 50 V	02010	SA115C104MAAH
A5 C725	0160-5746	1	1	CAP 0.1uF 50 V	06121	B37987-T5104-M11
A5 C727	0160-6500	7	1	CAP 0.01uF 100 V	02010	SA101C103KAAH
A5 C728	0160-6500	7	1	CAP 0.01uF 100 V	02010	SA101C103KAAH
A5 C730	0160-6623	5	1	CAP 0.1uF 50 V	02010	SA115C104MAAH
A5 C731	0160-6623	5	1	CAP 0.1uF 50 V	02010	SA115C104MAAH
A5 C733	0160-6623	5	1	CAP 0.1uF 50 V	02010	SA115C104MAAH
A5 C735	0160-4535	4	1	CAP 1uF 50 V	02010	SR305C105KAAH
A5 C736	0160-6623	5	1	CAP 0.1uF 50 V	02010	SA115C104MAAH
A5 C740	0160-6623	5	1	CAP 0.1uF 50 V	02010	SA115C104MAAH
A5 C741	0160-5726	7	1	CAP 0.01uF 100 V	06121	B37987-J1103-M034
A5 C742	0160-6500	7	1	CAP 0.01uF 100 V	02010	SA101C103KAAH
A5 C743	0160-6500	7	1	CAP 0.01uF 100 V	02010	SA101C103KAAH
A5 C750	0160-6623	5	1	CAP 0.1uF 50 V	02010	SA115C104MAAH
A5 C760	0160-6623	5	1	CAP 0.1uF 50 V	02010	SA115C104MAAH

Table C-12. 8131A Option 020 Timing Board Parts List (continued)

Reference	HP Part #	CD	Qty	Description	Manuf'r	Part #
A5 C765	0160-6623	5	1	CAP 0.1uF 50 V	02010	SA115C104MAAH
A5 C770	0160-3872	0	1	CAP 2.2pF 200 V	06352	FD12C0G2D2R2C
A5 C771	0160-3872	0	1	CAP 2.2pF 200 V	06352	FD12C0G2D2R2C
A5 CP100	0180-1974	1	1	CAP 10uF 35 V	04200	150D106X9035R2-DYS
A5 CP102	0180-0229	7	1	CAP 33uF 10 V	04200	150D336X9010B2-DYS
A5 CP104	0180-0229	7	1	CAP 33uF 10 V	04200	150D336X9010B2-DYS
A5 CP106	0180-0229	7	1	CAP 33uF 10 V	04200	150D336X9010B2-DYS
A5 CP108	0180-1974	1	1	CAP 10uF 35 V	04200	150D106X9035R2-DYS
A5 CP180	0180-0229	7	1	CAP 33uF 10 V	04200	150D336X9010B2-DYS
A5 CP200	0180-4129	4	1	CAP 1uF 35 V	04200	173D105X9035V
A5 CP201	0180-4129	4	1	CAP 1uF 35 V	04200	173D105X9035V
A5 CR100	1901-0535	9	1	DIO- SCHOTTKY SM	02062	50825511
A5 CR102	1901-0535	9	1	DIO- SCHOTTKY SM	02062	50825511
A5 CR103	1901-0734	0	1	DIO-1N5818	02037	1N5818
A5 CR310	1901-1098	1	1	DIO-1N4150	00746	
A5 CR311	1901-1098	1	1	DIO-1N4150	00746	
A5 CR312	1901-1098	1	1	DIO-1N4150	00746	
A5 CR313	1901-1098	1	1	DIO-1N4150	00746	
A5 CR314	1901-1098	1	1	DIO-1N4150	00746	
A5 CR315	1901-1098	1	1	DIO-1N4150	00746	
A5 CR410	1901-1098	1	1	DIO-1N4150	00746	
A5 CR411	1901-1098	1	1	DIO-1N4150	00746	
A5 CR412	1901-1098	1	1	DIO-1N4150	00746	
A5 CR413	1901-1098	1	1	DIO-1N4150	00746	
A5 CR414	1901-1098	1	1	DIO-1N4150	00746	
A5 CR415	1901-1098	1	1	DIO-1N4150	00746	
A5 CR416	1901-0731	7	1	DIO-PWR RECT	02037	SR3010-3RL
A5 CR510	1901-1098	1	1	DIO-1N4150	00746	
A5 CR511	1901-1098	1	1	DIO-1N4150	00746	
A5 CR512	1901-1098	1	1	DIO-1N4150	00746	

Table C-12. 8131A Option 020 Timing Board Parts List (continued)

Reference	HP Part #	CD	Qty	Description	Manuf'r	Part #
A5 CR513	1901-1098	1	1	DIO-1N4150	00746	
A5 CR514	1901-1098	1	1	DIO-1N4150	00746	
A5 CR515	1901-1098	1	1	DIO-1N4150	00746	
A5 CR610	1901-1098	1	1	DIO-1N4150	00746	
A5 CR611	1901-1098	1	1	DIO-1N4150	00746	
A5 CR612	1901-1098	1	1	DIO-1N4150	00746	
A5 CR613	1901-1098	1	1	DIO-1N4150	00746	
A5 CR614	1901-1098	1	1	DIO-1N4150	00746	
A5 CR615	1901-1098	1	1	DIO-1N4150	00746	
A5 CR616	1901-0731	7	1	DIO-PWR RECT	02037	SR3010-3RL
A5 CR710	1901-1098	1	1	DIO-1N4150	00746	
A5 CR711	1901-1098	1	1	DIO-1N4150	00746	
A5 CR712	1901-1098	1	1	DIO-1N4150	00746	
A5 CR713	1901-1098	1	1	DIO-1N4150	00746	
A5 CR714	1901-1098	1	1	DIO-1N4150	00746	
A5 CR715	1901-1098	1	1	DIO-1N4150	00746	
A5 J100	1251-8324	1	1	CONN-POST-TP-HDR	04486	G06M96P4BEBL-004-715
A5 J101	1251-5380	3	1	CONN-POST-TP-HDR	02946	68000-602
A5 J102	1251-5380	3	1	CONN-POST-TP-HDR	02946	68000-602
A5 J200	1250-0543	8	1	CONN-RF SM-SNP	05769	51-053-0349-BE8
A5 J400	1251-5380	3	1	CONN-POST-TP-HDR	02946	68000-602
A5 J600	1251-5380	3	1	CONN-POST-TP-HDR	02946	68000-602
A5 K400	0490-1667	6	1	RLY 2C 12VDC	09809	RG2T-12V
A5 K600	0490-1667	6	1	RLY 2C 12VDC	09809	RG2T-12V
A5 L100	9100-1788	6	1	CORE-FERRITE	02995	VK200 20/4B
A5 L101	9100-1788	6	1	CORE-FERRITE	02995	VK200 20/4B
A5 L102	9100-1788	6	1	CORE-FERRITE	02995	VK200 20/4B
A5 L103	9100-1788	6	1	CORE-FERRITE	02995	VK200 20/4B
A5 L104	9100-1788	6	1	CORE-FERRITE	02995	VK200 20/4B
A5 L110	9100-2891	4	1	L 50NH +-10%	03273	10M050K-1

Table C-12. 8131A Option 020 Timing Board Parts List (continued)

Reference	HP Part #	CD	Qty	Description	Manuf'r	Part #
A5 L111	9100-2891	4	1	L 50NH +-10%	03273	10M050K-1
A5 L112	9100-2891	4	1	L 50NH +-10%	03273	10M050K-1
A5 L113	9100-2891	4	1	L 50NH +-10%	03273	10M050K-1
A5 L114	9100-2891	4	1	L 50NH +-10%	03273	10M050K-1
A5 L300	9100-2891	4	1	L 50NH +-10%	03273	10M050K-1
A5 L300*	9100-2891	4	1	L 50NH +-10%	03273	10M050K-1
A5 L400	9100-2891	4		L 50NH +-10%	03273	10M050K-1
A5 L400	8159-0005	0	1	RES-ZERO OHMS	01339	L-2007-1
A5 L500	9100-2891	4	1	L 50NH +-10%	03273	10M050K-1
A5 L600	9100-2891	4		L 50NH +-10%	03273	10M050K-1
A5 L600	8159-0005	0	1	RES-ZERO OHMS	01339	L-2007-1
A5 L700	9100-2891	4	1	L 50NH +-10%	03273	10M050K-1
A5 MP130	1400-1437	0	4	CLAMP-CABLE	11808	
A5 MP134	1400-0082	9	1	CLMP-CA	02414	HP-2N
A5 MP136	3050-0891	7	1	WASHER-FL MTLC 3	06691	
A5 MP201	54100-29104	5	1	SPRING	28480	54100-29104
A5 MP202	54100-29101	2	1	CLAMP	28480	54100-29101
A5 MP209	54100-21103	8	1	SPRING	28480	54100-21103
A5 MP230	0380-1731	2	4	SPCR-PRS-IN	03981	YC3-4564
A5 MP240	0515-0659	8	4	SCR-MACHINE	05610	
A5 MP300	1200-1468	3	1	SOCKET RGA72 CN	10803	1KS072-33TT
A5 MP301	1200-1410	5	1	SOCKET PGA 72PI	10803	1KS072-33TG
A5 MP400	1200-1468	3	1	SOCKET RGA72 CN	10803	1KS072-33TT
A5 MP401	1200-1410	5	1	SOCKET PGA 72PI	10803	1KS072-33TG
A5 MP500	1200-1468	3	1	SOCKET RGA72 CN	10803	1KS072-33TT
A5 MP501	1200-1410	5	1	SOCKET PGA 72PI	10803	1KS072-33TG
A5 MP600	1200-1468	3	1	SOCKET RGA72 CN	10803	1KS072-33TT
A5 MP601	1200-1410	5	1	SOCKET PGA 72PI	10803	1KS072-33TG
A5 MP700	1200-1468	3	1	SOCKET RGA72 CN	10803	1KS072-33TT
A5 MP701	1200-1410	5	1	SOCKET PGA 72PI	10803	1KS072-33TG

Table C-12. 8131A Option 020 Timing Board Parts List (continued)

Reference	HP Part #	CD	Qty	Description	Manuf'r	Part #
A5 Q200	1853-0563	0	1	XSTR PNP SI	02037	2N3906(SEL)
A5 Q310	1854-1028	6	1	XSTR NPN SI	02037	2N3904
A5 Q312	1855-0309	6	1	MOSFET 2N4352 P-	02037	2N4352
A5 Q313	1855-0309	6	1	MOSFET 2N4352 P-	02037	2N4352
A5 Q314	1853-0569	6	1	XSTR PNP SI	02037	
A5 Q315	1854-0392	5	1	XSTR NPN SI	02037	2N5088
A5 Q316	1853-0569	6	1	XSTR PNP SI	02037	
A5 Q317	1854-0392	5	1	XSTR NPN SI	02037	2N5088
A5 Q318	1854-0392	5	1	XSTR NPN SI	02037	2N5088
A5 Q319	1853-0569	6	1	XSTR PNP SI	02037	
A5 Q410	1854-1028	6	1	XSTR NPN SI	02037	2N3904
A5 Q412	1855-0309	6	1	MOSFET 2N4352 P-	02037	2N4352
A5 Q413	1853-0569	6	1	XSTR PNP SI	02037	
A5 Q414	1853-0569	6	1	XSTR PNP SI	02037	
A5 Q415	1854-0392	5	1	XSTR NPN SI	02037	2N5088
A5 Q416	1853-0569	6	1	XSTR PNP SI	02037	
A5 Q417	1854-0392	5	1	XSTR NPN SI	02037	2N5088
A5 Q418	1854-0392	5	1	XSTR NPN SI	02037	2N5088
A5 Q419	1853-0569	6	1	XSTR PNP SI	02037	
A5 Q480	1854-0472	2	1	XSTR NPN SI DARL	02037	MPS-A14
A5 Q510	1854-1028	6	1	XSTR NPN SI	02037	2N3904
A5 Q512	1855-0309	6	1	MOSFET 2N4352 P-	02037	2N4352
A5 Q513	1853-0569	6	1	XSTR PNP SI	02037	
A5 Q514	1853-0569	6	1	XSTR PNP SI	02037	
A5 Q515	1854-0392	5	1	XSTR NPN SI	02037	2N5088
A5 Q516	1853-0569	6	1	XSTR PNP SI	02037	
A5 Q517	1854-0392	5	1	XSTR NPN SI	02037	2N5088
A5 Q518	1854-0392	5	1	XSTR NPN SI	02037	2N5088
A5 Q519	1853-0569	6	1	XSTR PNP SI	02037	
A5 Q610	1854-1028	6	1	XSTR NPN SI	02037	2N3904

Table C-12. 8131A Option 020 Timing Board Parts List (continued)

Reference	HP Part #	CD	Qty	Description	Manuf'r	Part #
A5 Q612	1855-0309	6	1	MOSFET 2N4352 P-	02037	2N4352
A5 Q613	1853-0569	6	1	XSTR PNP SI	02037	
A5 Q614	1853-0569	6	1	XSTR PNP SI	02037	
A5 Q615	1854-0392	5	1	XSTR NPN SI	02037	2N5088
A5 Q616	1853-0569	6	1	XSTR PNP SI	02037	
A5 Q617	1854-0392	5	1	XSTR NPN SI	02037	2N5088
A5 Q618	1854-0392	5	1	XSTR NPN SI	02037	2N5088
A5 Q619	1853-0569	6	1	XSTR PNP SI	02037	
A5 Q680	1854-0472	2	1	XSTR NPN SI DARL	02037	MPS-A14
A5 Q710	1854-1028	6	1	XSTR NPN SI	02037	2N3904
A5 Q712	1855-0309	6	1	MOSFET 2N4352 P-	02037	2N4352
A5 Q713	1853-0569	6	1	XSTR PNP SI	02037	
A5 Q714	1853-0569	6	1	XSTR PNP SI	02037	
A5 Q715	1854-0392	5	1	XSTR NPN SI	02037	2N5088
A5 Q716	1853-0569	6	1	XSTR PNP SI	02037	
A5 Q717	1854-0392	5	1	XSTR NPN SI	02037	2N5088
A5 Q718	1854-0392	5	1	XSTR NPN SI	02037	2N5088
A5 Q719	1853-0569	6	1	XSTR PNP SI	02037	
A5 R100	0757-0442	9	1	RES 10K 1% .125W	00746	CRB14 OR CRB25
A5 R200	0699-1206	1	1	RES 127 1% 2W MO	02499	GS-3
A5 R201	0699-1206	1	1	RES 127 1% 2W MO	02499	GS-3
A5 R202	0698-4855	0	1	RES 267 1% .5W T	01074	H2
A5 R204	0698-7205	0	1	RES 51.1 1% .05W	00746	CRB20
A5 R205	0757-0180	2	1	RES 31.6 1% .125	00746	CRB14 OR CRB25
A5 R206	0698-3162	0	1	RES 46.4K 1% .12	00746	CRB14 OR CRB25
A5 R208	0698-6347	9	1	RES 1.5K .1% .12	00746	CRB14 OR CRB25
A5 R209	0757-1094	9	1	RES 1.47K 1% .12	00746	CRB14 OR CRB25
A5 R210	0698-6963	5	1	RES 5.55K .1% .1	00746	CRB14 OR CRB25
A5 R211	0698-6963	5	1	RES 5.55K .1% .1	00746	CRB14 OR CRB25
A5 R212	0757-0394	0	1	RES 51.1 1% .125	00746	CRB14 OR CRB25

Table C-12. 8131A Option 020 Timing Board Parts List (continued)

Reference	HP Part #	CD	Qty	Description	Manuf'r	Part #
A5 R220	0757-0421	4	1	RES 825 1% .125W	00746	CRB14 OR CRB25
A5 R221	0698-3132	4	1	RES 261 1% .125W	00746	CRB14 OR CRB25
A5 R300	0757-0442	9	1	RES 10K 1% .125W	00746	CRB14 OR CRB25
A5 R301	0757-0394	0	1	RES 51.1 1% .125	00746	CRB14 OR CRB25
A5 R302	0698-4425	0	1	RES 1.54K 1% .12	00746	CRB14 OR CRB25
A5 R303	0757-0317	7	1	RES 1.33K 1% .12	00746	CRB14 OR CRB25
A5 R304	0757-0280	3	1	RES 1K 1% .125W	00746	CRB14 OR CRB25
A5 R305	0757-0394	0	1	RES 51.1 1% .125	00746	CRB14 OR CRB25
A5 R306	0757-0394	0	1	RES 51.1 1% .125	00746	CRB14 OR CRB25
A5 R307	0698-3132	4	1	RES 261 1% .125W	00746	CRB14 OR CRB25
A5 R309	0757-0394	0	1	RES 51.1 1% .125	00746	CRB14 OR CRB25
A5 R310	0757-0279	0	1	RES 3.16K 1% .12	00746	CRB14 OR CRB25
A5 R311	0698-6360	6	1	RES 10K .1% .125	00746	CRB14 OR CRB25
A5 R312	0699-1100	4	1	RES 6.984K .1% .	01074	H8
A5 R313	0698-3153	9	1	RES 3.83K 1% .12	00746	CRB14 OR CRB25
A5 R314	0757-0449	6	1	RES 20K 1% .125W	00746	CRB14 OR CRB25
A5 R315	0757-0449	6	1	RES 20K 1% .125W	00746	CRB14 OR CRB25
A5 R319	0757-0280	3	1	RES 1K 1% .125W	00746	CRB14 OR CRB25
A5 R320	0757-0279	0	1	RES 3.16K 1% .12	00746	CRB14 OR CRB25
A5 R321	0757-0279	0	1	RES 3.16K 1% .12	00746	CRB14 OR CRB25
A5 R322	0757-0317	7	1	RES 1.33K 1% .12	00746	CRB14 OR CRB25
A5 R323	0698-3154	0	1	RES 4.22K 1% .12	00746	CRB14 OR CRB25
A5 R324	0698-0085	0	1	RES 2.61K 1% .12	00746	CRB14 OR CRB25
A5 R325	0698-0085	0	1	RES 2.61K 1% .12	00746	CRB14 OR CRB25
A5 R326	0757-0419	0	1	RES 681 1% .125W	00746	CRB14 OR CRB25
A5 R327	0757-0394	0	1	RES 51.1 1% .125	00746	CRB14 OR CRB25
A5 R328	0757-0394	0	1	RES 51.1 1% .125	00746	CRB14 OR CRB25
A5 R329	0757-0419	0	1	RES 681 1% .125W	00746	CRB14 OR CRB25
A5 R330	0698-6347	9	1	RES 1.5K .1% .12	00746	CRB14 OR CRB25
A5 R331	0698-6348	0	1	RES 3K .1% .125W	00746	CRB14 OR CRB25

Table C-12. 8131A Option 020 Timing Board Parts List (continued)

Reference	HP Part #	CD	Qty	Description	Manuf'r	Part #
A5 R333	0698-6347	9	1	RES 1.5K .1% .12	00746	CRB14 OR CRB25
A5 R334	0757-0279	0	1	RES 3.16K 1% .12	00746	CRB14 OR CRB25
A5 R335	0698-3438	3	1	RES 147 1% .125W	00746	CRB14 OR CRB25
A5 R336	0757-0394	0	1	RES 51.1 1% .125	00746	CRB14 OR CRB25
A5 R337	0757-0279	0	1	RES 3.16K 1% .12	00746	CRB14 OR CRB25
A5 R338	0757-0349	5	1	RES 22.6K 1% .12	00746	CRB14 OR CRB25
A5 R339	0757-0477	0	1	RES 332K 1% .125	00746	CRB14 OR CRB25
A5 R340	0757-0279	0	1	RES 3.16K 1% .12	00746	CRB14 OR CRB25
A5 R341	0698-3155	1	1	RES 4.64K 1% .12	00746	CRB14 OR CRB25
A5 R342	0698-3446	3	1	RES 383 1% .125W	00746	CRB14 OR CRB25
A5 R343	0698-3158	4	1	RES 23.7K 1% .12	00746	CRB14 OR CRB25
A5 R344	0698-3268	7	1	RES 11.5K 1% .12	00746	CRB14 OR CRB25
A5 R345	0698-3136	8	1	RES 17.8K 1% .12	00746	CRB14 OR CRB25
A5 R346	0698-0085	0	1	RES 2.61K 1% .12	00746	CRB14 OR CRB25
A5 R347	0757-0280	3	1	RES 1K 1% .125W	00746	CRB14 OR CRB25
A5 R348	0698-3438	3	1	RES 147 1% .125W	00746	CRB14 OR CRB25
A5 R350	0757-0442	9	1	RES 10K 1% .125W	00746	CRB14 OR CRB25
A5 R351	0698-3460	1	1	RES 422K 1% .125	00746	CRB14 OR CRB25
A5 R362	0757-0394	0	1	RES 51.1 1% .125	00746	CRB14 OR CRB25
A5 R367	8159-0005	0	1	RES-ZERO OHMS	01339	L-2007-1
A5 R370	0698-3161	9	1	RES 38.3K 1% .12	00746	CRB14 OR CRB25
A5 R371	0757-0280	3	1	RES 1K 1% .125W	00746	CRB14 OR CRB25
A5 R373	0698-3446	3	1	RES 383 1% .125W	00746	CRB14 OR CRB25
A5 R375	0698-3159	5	1	RES 26.1K 1% .12	00746	CRB14 OR CRB25
A5 R376	0757-0283	6	1	RES 2K 1% .125W	00746	CRB14 OR CRB25
A5 R377	0757-0283	6	1	RES 2K 1% .125W	00746	CRB14 OR CRB25
A5 R378	0757-0283	6	1	RES 2K 1% .125W	00746	CRB14 OR CRB25
A5 R379	0757-0283	6	1	RES 2K 1% .125W	00746	CRB14 OR CRB25
A5 R381	0757-0283	6	1	RES 2K 1% .125W	00746	CRB14 OR CRB25
A5 R390	0757-0283	6	1	RES 2K 1% .125W	00746	CRB14 OR CRB25

Table C-12. 8131A Option 020 Timing Board Parts List (continued)

Reference	HP Part #	CD	Qty	Description	Manuf'r	Part #
A5 R391	0757-0283	6	1	RES 2K 1% .125W	00746	CRB14 OR CRB25
A5 R392	0757-0283	6	1	RES 2K 1% .125W	00746	CRB14 OR CRB25
A5 R394	0757-0283	6	1	RES 2K 1% .125W	00746	CRB14 OR CRB25
A5 R396	0757-0283	6	1	RES 2K 1% .125W	00746	CRB14 OR CRB25
A5 R400	0757-0442	9	1	RES 10K 1% .125W	00746	CRB14 OR CRB25
A5 R401	0757-0394	0	1	RES 51.1 1% .125	00746	CRB14 OR CRB25
A5 R402	0698-4425	0	1	RES 1.54K 1% .12	00746	CRB14 OR CRB25
A5 R403	0698-4422	7	1	RES 1.27K 1% .12	00746	CRB14 OR CRB25
A5 R404	0757-0280	3	1	RES 1K 1% .125W	00746	CRB14 OR CRB25
A5 R405	0757-0394	0	1	RES 51.1 1% .125	00746	CRB14 OR CRB25
A5 R406	0698-3438	3	1	RES 147 1% .125W	00746	CRB14 OR CRB25
A5 R409	0757-0394	0	1	RES 51.1 1% .125	00746	CRB14 OR CRB25
A5 R410	0757-0279	0	1	RES 3.16K 1% .12	00746	CRB14 OR CRB25
A5 R411	0698-6360	6	1	RES 10K .1% .125	00746	CRB14 OR CRB25
A5 R412	0699-1011	6	1	RES 3.32K .1% .1	00746	CRB14 OR CRB25
A5 R413	0698-3153	9	1	RES 3.83K 1% .12	00746	CRB14 OR CRB25
A5 R414	0757-0449	6	1	RES 20K 1% .125W	00746	CRB14 OR CRB25
A5 R415	0757-0449	6	1	RES 20K 1% .125W	00746	CRB14 OR CRB25
A5 R419	0757-0280	3	1	RES 1K 1% .125W	00746	CRB14 OR CRB25
A5 R420	0757-0279	0	1	RES 3.16K 1% .12	00746	CRB14 OR CRB25
A5 R421	0757-0279	0	1	RES 3.16K 1% .12	00746	CRB14 OR CRB25
A5 R422	0757-0424	7	1	RES 1.1K 1% .125	00746	CRB14 OR CRB25
A5 R423	0757-0279	0	1	RES 3.16K 1% .12	00746	CRB14 OR CRB25
A5 R424	0698-0085	0	1	RES 2.61K 1% .12	00746	CRB14 OR CRB25
A5 R425	0757-0278	9	1	RES 1.78K 1% .12	00746	CRB14 OR CRB25
A5 R426	0757-0280	3	1	RES 1K 1% .125W	00746	CRB14 OR CRB25
A5 R427	0757-0394	0	1	RES 51.1 1% .125	00746	CRB14 OR CRB25
A5 R428	0757-0394	0	1	RES 51.1 1% .125	00746	CRB14 OR CRB25
A5 R429	0757-0419	0	1	RES 681 1% .125W	00746	CRB14 OR CRB25
A5 R430	0698-6347	9	1	RES 1.5K .1% .12	00746	CRB14 OR CRB25

Table C-12. 8131A Option 020 Timing Board Parts List (continued)

Reference	HP Part #	CD	Qty	Description	Manuf'r	Part #
A5 R431	0698-6348	0	1	RES 3K .1% .125W	00746	CRB14 OR CRB25
A5 R433	0698-6347	9	1	RES 1.5K .1% .12	00746	CRB14 OR CRB25
A5 R434	0698-6616	5	1	RES 750 .1% .125	00746	CRB14 OR CRB25
A5 R435	0698-3438	3	1	RES 147 1% .125W	00746	CRB14 OR CRB25
A5 R436	0757-0394	0	1	RES 51.1 1% .125	00746	CRB14 OR CRB25
A5 R437	0698-6616	5	1	RES 750 .1% .125	00746	CRB14 OR CRB25
A5 R438	0757-0465	6		RES 100K 1% .125	00746	CRB14 OR CRB25
A5 R438*	0757-0463	4	1	RES 82.5K 1% .12	00746	CRB14 OR CRB25
A5 R440	0757-0279	0	1	RES 3.16K 1% .12	00746	CRB14 OR CRB25
A5 R441	0698-3155	1	1	RES 4.64K 1% .12	00746	CRB14 OR CRB25
A5 R442	0698-3446	3	1	RES 383 1% .125W	00746	CRB14 OR CRB25
A5 R443	0757-0462	3	1	RES 75K 1% .125W	00746	CRB14 OR CRB25
A5 R444	0698-3268	7	1	RES 11.5K 1% .12	00746	CRB14 OR CRB25
A5 R445	0698-3136	8	1	RES 17.8K 1% .12	00746	CRB14 OR CRB25
A5 R446	0698-0085	0	1	RES 2.61K 1% .12	00746	CRB14 OR CRB25
A5 R447	0757-0280	3	1	RES 1K 1% .125W	00746	CRB14 OR CRB25
A5 R448	0698-3438	3	1	RES 147 1% .125W	00746	CRB14 OR CRB25
A5 R450	0757-0442	9	1	RES 10K 1% .125W	00746	CRB14 OR CRB25
A5 R453	0757-0462	3		RES 75K 1% .125W	00746	CRB14 OR CRB25
A5 R453*	0698-3243	8	1	RES 178K 1% .125	00746	CRB14 OR CRB25
A5 R460	0757-0394	0	1	RES 51.1 1% .125	00746	CRB14 OR CRB25
A5 R461	0757-0394	0	1	RES 51.1 1% .125	00746	CRB14 OR CRB25
A5 R462	0757-0394	0	1	RES 51.1 1% .125	00746	CRB14 OR CRB25
A5 R467	8159-0005	0	1	RES-ZERO OHMS	01339	L-2007-1
A5 R470	0698-3158	4	1	RES 23.7K 1% .12	00746	CRB14 OR CRB25
A5 R471	0757-0280	3	1	RES 1K 1% .125W	00746	CRB14 OR CRB25
A5 R473	0698-3446	3	1	RES 383 1% .125W	00746	CRB14 OR CRB25
A5 R475	0698-3159	5	1	RES 26.1K 1% .12	00746	CRB14 OR CRB25
A5 R476	0757-0283	6	1	RES 2K 1% .125W	00746	CRB14 OR CRB25
A5 R477	0757-0283	6	1	RES 2K 1% .125W	00746	CRB14 OR CRB25

Table C-12. 8131A Option 020 Timing Board Parts List (continued)

Reference	HP Part #	CD	Qty	Description	Manuf'r	Part #
A5 R479	0757-0283	6	1	RES 2K 1% .125W	00746	CRB14 OR CRB25
A5 R480	0757-0283	6	1	RES 2K 1% .125W	00746	CRB14 OR CRB25
A5 R481	0757-0283	6	1	RES 2K 1% .125W	00746	CRB14 OR CRB25
A5 R486	0757-0465	6	1	RES 100K 1% .125	00746	CRB14 OR CRB25
A5 R490	0757-0283	6	1	RES 2K 1% .125W	00746	CRB14 OR CRB25
A5 R491	0757-0283	6	1	RES 2K 1% .125W	00746	CRB14 OR CRB25
A5 R492	0757-0283	6	1	RES 2K 1% .125W	00746	CRB14 OR CRB25
A5 R494	0757-0283	6	1	RES 2K 1% .125W	00746	CRB14 OR CRB25
A5 R496	0757-0283	6	1	RES 2K 1% .125W	00746	CRB14 OR CRB25
A5 R501	0757-0394	0	1	RES 51.1 1% .125	00746	CRB14 OR CRB25
A5 R502	0698-4425	0	1	RES 1.54K 1% .12	00746	CRB14 OR CRB25
A5 R503	0757-0422	5	1	RES 909 1% .125W	00746	CRB14 OR CRB25
A5 R504	0757-0280	3	1	RES 1K 1% .125W	00746	CRB14 OR CRB25
A5 R505	0757-0394	0	1	RES 51.1 1% .125	00746	CRB14 OR CRB25
A5 R506	0698-3438	3	1	RES 147 1% .125W	00746	CRB14 OR CRB25
A5 R509	0757-0394	0	1	RES 51.1 1% .125	00746	CRB14 OR CRB25
A5 R510	0757-0279	0	1	RES 3.16K 1% .12	00746	CRB14 OR CRB25
A5 R511	0698-6360	6	1	RES 10K .1% .125	00746	CRB14 OR CRB25
A5 R512	0699-1011	6	1	RES 3.32K .1% .1	00746	CRB14 OR CRB25
A5 R513	0698-3153	9	1	RES 3.83K 1% .12	00746	CRB14 OR CRB25
A5 R514	0757-0449	6	1	RES 20K 1% .125W	00746	CRB14 OR CRB25
A5 R515	0757-0449	6	1	RES 20K 1% .125W	00746	CRB14 OR CRB25
A5 R519	0757-0280	3	1	RES 1K 1% .125W	00746	CRB14 OR CRB25
A5 R520	0757-0279	0	1	RES 3.16K 1% .12	00746	CRB14 OR CRB25
A5 R521	0757-0279	0	1	RES 3.16K 1% .12	00746	CRB14 OR CRB25
A5 R522	0757-0317	7	1	RES 1.33K 1% .12	00746	CRB14 OR CRB25
A5 R523	0698-0084	9	1	RES 2.15K 1% .12	00746	CRB14 OR CRB25
A5 R524	0698-0085	0	1	RES 2.61K 1% .12	00746	CRB14 OR CRB25
A5 R525	0757-0278	9	1	RES 1.78K 1% .12	00746	CRB14 OR CRB25
A5 R526	0757-0280	3	1	RES 1K 1% .125W	00746	CRB14 OR CRB25

Table C-12. 8131A Option 020 Timing Board Parts List (continued)

Reference	HP Part #	CD	Qty	Description	Manuf'r	Part #
A5 R527	0757-0394	0	1	RES 51.1 1% .125	00746	CRB14 OR CRB25
A5 R528	0757-0394	0	1	RES 51.1 1% .125	00746	CRB14 OR CRB25
A5 R529	0757-0419	0	1	RES 681 1% .125W	00746	CRB14 OR CRB25
A5 R530	0698-6347	9	1	RES 1.5K .1% .12	00746	CRB14 OR CRB25
A5 R531	0698-6348	0	1	RES 3K .1% .125W	00746	CRB14 OR CRB25
A5 R533	0698-6347	9	1	RES 1.5K .1% .12	00746	CRB14 OR CRB25
A5 R534	0698-6616	5	1	RES 750 .1% .125	00746	CRB14 OR CRB25
A5 R535	0698-3438	3	1	RES 147 1% .125W	00746	CRB14 OR CRB25
A5 R536	0757-0394	0	1	RES 51.1 1% .125	00746	CRB14 OR CRB25
A5 R537	0698-6616	5	1	RES 750 .1% .125	00746	CRB14 OR CRB25
A5 R538	0757-0978	6	1	RES 95.3K 1% .12	00746	CRB14 OR CRB25
A5 R539	0698-3260	9	1	RES 464K 1% .125	00746	CRB14 OR CRB25
A5 R540	0757-0279	0	1	RES 3.16K 1% .12	00746	CRB14 OR CRB25
A5 R541	0698-3155	1	1	RES 4.64K 1% .12	00746	CRB14 OR CRB25
A5 R542	0698-3446	3	1	RES 383 1% .125W	00746	CRB14 OR CRB25
A5 R543	0757-0464	5	1	RES 90.9K 1% .12	00746	CRB14 OR CRB25
A5 R544	0698-3268	7	1	RES 11.5K 1% .12	00746	CRB14 OR CRB25
A5 R545	0698-3136	8	1	RES 17.8K 1% .12	00746	CRB14 OR CRB25
A5 R546	0698-0085	0	1	RES 2.61K 1% .12	00746	CRB14 OR CRB25
A5 R547	0757-0280	3	1	RES 1K 1% .125W	00746	CRB14 OR CRB25
A5 R548	0698-3438	3	1	RES 147 1% .125W	00746	CRB14 OR CRB25
A5 R550	0757-0442	9	1	RES 10K 1% .125W	00746	CRB14 OR CRB25
A5 R551	0698-8961	7	1	RES 909K 1% .125	00746	CRB14 OR CRB25
A5 R560	0757-0394	0	1	RES 51.1 1% .125	00746	CRB14 OR CRB25
A5 R567	8159-0005	0	1	RES-ZERO OHMS	01339	L-2007-1
A5 R570	0757-0449	6	1	RES 20K 1% .125W	00746	CRB14 OR CRB25
A5 R571	0757-0280	3	1	RES 1K 1% .125W	00746	CRB14 OR CRB25
A5 R573	0698-3446	3	1	RES 383 1% .125W	00746	CRB14 OR CRB25
A5 R575	0698-3159	5	1	RES 26.1K 1% .12	00746	CRB14 OR CRB25
A5 R576	0757-0283	6	1	RES 2K 1% .125W	00746	CRB14 OR CRB25

Table C-12. 8131A Option 020 Timing Board Parts List (continued)

Reference	HP Part #	CD	Qty	Description	Manuf'r	Part #
A5 R577	0757-0283	6	1	RES 2K 1% .125W	00746	CRB14 OR CRB25
A5 R579	0757-0283	6	1	RES 2K 1% .125W	00746	CRB14 OR CRB25
A5 R580	0757-0283	6	1	RES 2K 1% .125W	00746	CRB14 OR CRB25
A5 R581	0757-0283	6	1	RES 2K 1% .125W	00746	CRB14 OR CRB25
A5 R590	0757-0283	6	1	RES 2K 1% .125W	00746	CRB14 OR CRB25
A5 R591	0757-0283	6	1	RES 2K 1% .125W	00746	CRB14 OR CRB25
A5 R592	0757-0283	6	1	RES 2K 1% .125W	00746	CRB14 OR CRB25
A5 R594	0757-0283	6	1	RES 2K 1% .125W	00746	CRB14 OR CRB25
A5 R596	0757-0283	6	1	RES 2K 1% .125W	00746	CRB14 OR CRB25
A5 R600	0757-0442	9	1	RES 10K 1% .125W	00746	CRB14 OR CRB25
A5 R601	0757-0394	0	1	RES 51.1 1% .125	00746	CRB14 OR CRB25
A5 R602	0698-4425	0	1	RES 1.54K 1% .12	00746	CRB14 OR CRB25
A5 R603	0698-4422	7	1	RES 1.27K 1% .12	00746	CRB14 OR CRB25
A5 R604	0757-0280	3	1	RES 1K 1% .125W	00746	CRB14 OR CRB25
A5 R605	0757-0394	0	1	RES 51.1 1% .125	00746	CRB14 OR CRB25
A5 R606	0698-3438	3	1	RES 147 1% .125W	00746	CRB14 OR CRB25
A5 R609	0757-0394	0	1	RES 51.1 1% .125	00746	CRB14 OR CRB25
A5 R610	0757-0279	0	1	RES 3.16K 1% .12	00746	CRB14 OR CRB25
A5 R611	0698-6360	6	1	RES 10K .1% .125	00746	CRB14 OR CRB25
A5 R612	0699-1011	6	1	RES 3.32K .1% .1	00746	CRB14 OR CRB25
A5 R613	0698-3153	9	1	RES 3.83K 1% .12	00746	CRB14 OR CRB25
A5 R614	0757-0449	6	1	RES 20K 1% .125W	00746	CRB14 OR CRB25
A5 R615	0757-0449	6	1	RES 20K 1% .125W	00746	CRB14 OR CRB25
A5 R619	0757-0280	3	1	RES 1K 1% .125W	00746	CRB14 OR CRB25
A5 R620	0757-0279	0	1	RES 3.16K 1% .12	00746	CRB14 OR CRB25
A5 R621	0757-0279	0	1	RES 3.16K 1% .12	00746	CRB14 OR CRB25
A5 R622	0757-0424	7	1	RES 1.1K 1% .125	00746	CRB14 OR CRB25
A5 R623	0757-0279	0	1	RES 3.16K 1% .12	00746	CRB14 OR CRB25
A5 R624	0698-0085	0	1	RES 2.61K 1% .12	00746	CRB14 OR CRB25
A5 R625	0757-0278	9	1	RES 1.78K 1% .12	00746	CRB14 OR CRB25

Table C-12. 8131A Option 020 Timing Board Parts List (continued)

Reference	HP Part #	CD	Qty	Description	Manuf'r	Part #
A5 R626	0757-0280	3	1	RES 1K 1% .125W	00746	CRB14 OR CRB25
A5 R627	0757-0394	0	1	RES 51.1 1% .125	00746	CRB14 OR CRB25
A5 R628	0757-0394	0	1	RES 51.1 1% .125	00746	CRB14 OR CRB25
A5 R629	0757-0419	0	1	RES 681 1% .125W	00746	CRB14 OR CRB25
A5 R630	0698-6347	9	1	RES 1.5K .1% .12	00746	CRB14 OR CRB25
A5 R631	0698-6348	0	1	RES 3K .1% .125W	00746	CRB14 OR CRB25
A5 R633	0698-6347	9	1	RES 1.5K .1% .12	00746	CRB14 OR CRB25
A5 R634	0698-6616	5	1	RES 750 .1% .125	00746	CRB14 OR CRB25
A5 R635	0698-3438	3	1	RES 147 1% .125W	00746	CRB14 OR CRB25
A5 R636	0757-0394	0	1	RES 51.1 1% .125	00746	CRB14 OR CRB25
A5 R637	0698-6616	5	1	RES 750 .1% .125	00746	CRB14 OR CRB25
A5 R638	0757-0465	6		RES 100K 1% .125	00746	CRB14 OR CRB25
A5 R638*	0757-0463	4	1	RES 82.5K 1% .12	00746	CRB14 OR CRB25
A5 R640	0757-0279	0	1	RES 3.16K 1% .12	00746	CRB14 OR CRB25
A5 R641	0698-3155	1	1	RES 4.64K 1% .12	00746	CRB14 OR CRB25
A5 R642	0698-3446	3	1	RES 383 1% .125W	00746	CRB14 OR CRB25
A5 R643	0757-0462	3	1	RES 75K 1% .125W	00746	CRB14 OR CRB25
A5 R644	0698-3268	7	1	RES 11.5K 1% .12	00746	CRB14 OR CRB25
A5 R645	0698-3136	8	1	RES 17.8K 1% .12	00746	CRB14 OR CRB25
A5 R646	0698-0085	0	1	RES 2.61K 1% .12	00746	CRB14 OR CRB25
A5 R647	0757-0280	3	1	RES 1K 1% .125W	00746	CRB14 OR CRB25
A5 R648	0698-3438	3	1	RES 147 1% .125W	00746	CRB14 OR CRB25
A5 R650	0757-0442	9	1	RES 10K 1% .125W	00746	CRB14 OR CRB25
A5 R653	0757-0462	3		RES 75K 1% .125W	00746	CRB14 OR CRB25
A5 R653*	0698-3243	8	1	RES 178K 1% .125	00746	CRB14 OR CRB25
A5 R660	0757-0394	0	1	RES 51.1 1% .125	00746	CRB14 OR CRB25
A5 R661	0757-0394	0	1	RES 51.1 1% .125	00746	CRB14 OR CRB25
A5 R667	8159-0005	0	1	RES-ZERO OHMS	01339	L-2007-1
A5 R670	0698-3158	4	1	RES 23.7K 1% .12	00746	CRB14 OR CRB25
A5 R671	0757-0280	3	1	RES 1K 1% .125W	00746	CRB14 OR CRB25

Table C-12. 8131A Option 020 Timing Board Parts List (continued)

Reference	HP Part #	CD	Qty	Description	Manuf'r	Part #
A5 R673	0698-3446	3	1	RES 383 1% .125W	00746	CRB14 OR CRB25
A5 R675	0698-3159	5	1	RES 26.1K 1% .12	00746	CRB14 OR CRB25
A5 R676	0757-0283	6	1	RES 2K 1% .125W	00746	CRB14 OR CRB25
A5 R677	0757-0283	6	1	RES 2K 1% .125W	00746	CRB14 OR CRB25
A5 R679	0757-0283	6	1	RES 2K 1% .125W	00746	CRB14 OR CRB25
A5 R680	0757-0283	6	1	RES 2K 1% .125W	00746	CRB14 OR CRB25
A5 R681	0757-0283	6	1	RES 2K 1% .125W	00746	CRB14 OR CRB25
A5 R686	0757-0465	6	1	RES 100K 1% .125	00746	CRB14 OR CRB25
A5 R690	0757-0283	6	1	RES 2K 1% .125W	00746	CRB14 OR CRB25
A5 R691	0757-0283	6	1	RES 2K 1% .125W	00746	CRB14 OR CRB25
A5 R692	0757-0283	6	1	RES 2K 1% .125W	00746	CRB14 OR CRB25
A5 R694	0757-0283	6	1	RES 2K 1% .125W	00746	CRB14 OR CRB25
A5 R696	0757-0283	6	1	RES 2K 1% .125W	00746	CRB14 OR CRB25
A5 R701	0757-0394	0	1	RES 51.1 1% .125	00746	CRB14 OR CRB25
A5 R702	0698-4425	0	1	RES 1.54K 1% .12	00746	CRB14 OR CRB25
A5 R703	0757-0422	5	1	RES 909 1% .125W	00746	CRB14 OR CRB25
A5 R704	0757-0280	3	1	RES 1K 1% .125W	00746	CRB14 OR CRB25
A5 R705	0757-0394	0	1	RES 51.1 1% .125	00746	CRB14 OR CRB25
A5 R706	0698-3438	3	1	RES 147 1% .125W	00746	CRB14 OR CRB25
A5 R709	0757-0394	0	1	RES 51.1 1% .125	00746	CRB14 OR CRB25
A5 R710	0757-0279	0	1	RES 3.16K 1% .12	00746	CRB14 OR CRB25
A5 R711	0698-6360	6	1	RES 10K .1% .125	00746	CRB14 OR CRB25
A5 R712	0699-1011	6	1	RES 3.32K .1% .1	00746	CRB14 OR CRB25
A5 R713	0698-3153	9	1	RES 3.83K 1% .12	00746	CRB14 OR CRB25
A5 R714	0757-0449	6	1	RES 20K 1% .125W	00746	CRB14 OR CRB25
A5 R715	0757-0449	6	1	RES 20K 1% .125W	00746	CRB14 OR CRB25
A5 R719	0757-0280	3	1	RES 1K 1% .125W	00746	CRB14 OR CRB25
A5 R720	0757-0279	0	1	RES 3.16K 1% .12	00746	CRB14 OR CRB25
A5 R721	0757-0279	0	1	RES 3.16K 1% .12	00746	CRB14 OR CRB25
A5 R722	0757-0317	7	1	RES 1.33K 1% .12	00746	CRB14 OR CRB25

Table C-12. 8131A Option 020 Timing Board Parts List (continued)

Reference	HP Part #	CD	Qty	Description	Manuf'r	Part #
A5 R723	0698-0084	9	1	RES 2.15K 1% .12	00746	CRB14 OR CRB25
A5 R724	0698-0085	0	1	RES 2.61K 1% .12	00746	CRB14 OR CRB25
A5 R725	0757-0278	9	1	RES 1.78K 1% .12	00746	CRB14 OR CRB25
A5 R726	0757-0280	3	1	RES 1K 1% .125W	00746	CRB14 OR CRB25
A5 R727	0757-0394	0	1	RES 51.1 1% .125	00746	CRB14 OR CRB25
A5 R728	0757-0394	0	1	RES 51.1 1% .125	00746	CRB14 OR CRB25
A5 R729	0757-0419	0	1	RES 681 1% .125W	00746	CRB14 OR CRB25
A5 R730	0698-6347	9	1	RES 1.5K .1% .12	00746	CRB14 OR CRB25
A5 R731	0698-6348	0	1	RES 3K .1% .125W	00746	CRB14 OR CRB25
A5 R733	0698-6347	9	1	RES 1.5K .1% .12	00746	CRB14 OR CRB25
A5 R734	0698-6616	5	1	RES 750 .1% .125	00746	CRB14 OR CRB25
A5 R735	0698-3438	3	1	RES 147 1% .125W	00746	CRB14 OR CRB25
A5 R736	0757-0394	0	1	RES 51.1 1% .125	00746	CRB14 OR CRB25
A5 R737	0698-6616	5	1	RES 750 .1% .125	00746	CRB14 OR CRB25
A5 R738	0757-0978	6	1	RES 95.3K 1% .12	00746	CRB14 OR CRB25
A5 R739	0698-3260	9	1	RES 464K 1% .125	00746	CRB14 OR CRB25
A5 R740	0757-0279	0	1	RES 3.16K 1% .12	00746	CRB14 OR CRB25
A5 R741	0698-3155	1	1	RES 4.64K 1% .12	00746	CRB14 OR CRB25
A5 R742	0698-3446	3	1	RES 383 1% .125W	00746	CRB14 OR CRB25
A5 R743	0757-0464	5	1	RES 90.9K 1% .12	00746	CRB14 OR CRB25
A5 R744	0698-3268	7	1	RES 11.5K 1% .12	00746	CRB14 OR CRB25
A5 R745	0698-3136	8	1	RES 17.8K 1% .12	00746	CRB14 OR CRB25
A5 R746	0698-0085	0	1	RES 2.61K 1% .12	00746	CRB14 OR CRB25
A5 R747	0757-0280	3	1	RES 1K 1% .125W	00746	CRB14 OR CRB25
A5 R748	0698-3438	3	1	RES 147 1% .125W	00746	CRB14 OR CRB25
A5 R750	0757-0442	9	1	RES 10K 1% .125W	00746	CRB14 OR CRB25
A5 R751	0698-8961	7	1	RES 909K 1% .125	00746	CRB14 OR CRB25
A5 R760	0757-0394	0	1	RES 51.1 1% .125	00746	CRB14 OR CRB25
A5 R767	8159-0005	0	1	RES-ZERO OHMS	01339	L-2007-1
A5 R770	0757-0449	6	1	RES 20K 1% .125W	00746	CRB14 OR CRB25

Table C-12. 8131A Option 020 Timing Board Parts List (continued)

Reference	HP Part #	CD	Qty	Description	Manuf'r	Part #
A5 R771	0757-0280	3	1	RES 1K 1% .125W	00746	CRB14 OR CRB25
A5 R773	0698-3446	3	1	RES 383 1% .125W	00746	CRB14 OR CRB25
A5 R775	0698-3159	5	1	RES 26.1K 1% .12	00746	CRB14 OR CRB25
A5 R776	0757-0283	6	1	RES 2K 1% .125W	00746	CRB14 OR CRB25
A5 R777	0757-0283	6	1	RES 2K 1% .125W	00746	CRB14 OR CRB25
A5 R779	0757-0283	6	1	RES 2K 1% .125W	00746	CRB14 OR CRB25
A5 R780	0757-0283	6	1	RES 2K 1% .125W	00746	CRB14 OR CRB25
A5 R781	0757-0283	6	1	RES 2K 1% .125W	00746	CRB14 OR CRB25
A5 R790	0757-0283	6	1	RES 2K 1% .125W	00746	CRB14 OR CRB25
A5 R791	0757-0283	6	1	RES 2K 1% .125W	00746	CRB14 OR CRB25
A5 R792	0757-0283	6	1	RES 2K 1% .125W	00746	CRB14 OR CRB25
A5 R794	0757-0283	6	1	RES 2K 1% .125W	00746	CRB14 OR CRB25
A5 R796	0757-0283	6	1	RES 2K 1% .125W	00746	CRB14 OR CRB25
A5 RA100	1810-0316	1	1	NETWORK-RES DIP	02483	761-3-R10K
A5 RT393	0837-0035	6	1	THERMISTOR DISC	05098	35D24
A5 RT493	0837-0035	6	1	THERMISTOR DISC	05098	35D24
A5 RT593	0837-0035	6	1	THERMISTOR DISC	05098	35D24
A5 RT693	0837-0035	6	1	THERMISTOR DISC	05098	35D24
A5 RT793	0837-0035	6	1	THERMISTOR DISC	05098	35D24
A5 TP200	0360-2264	6	1	TERM.-TEST POINT	10358	1095D
A5 TP311	0360-2264	6	1	TERM.-TEST POINT	10358	1095D
A5 TP312	0360-2264	6	1	TERM.-TEST POINT	10358	1095D
A5 TP323	0360-2264	6	1	TERM.-TEST POINT	10358	1095D
A5 TP324	0360-2264	6	1	TERM.-TEST POINT	10358	1095D
A5 TP411	0360-2264	6	1	TERM.-TEST POINT	10358	1095D
A5 TP423	0360-2264	6	1	TERM.-TEST POINT	10358	1095D
A5 TP424	0360-2264	6	1	TERM.-TEST POINT	10358	1095D
A5 TP511	0360-2264	6	1	TERM.-TEST POINT	10358	1095D
A5 TP512	0360-2264	6	1	TERM.-TEST POINT	10358	1095D
A5 TP523	0360-2264	6	1	TERM.-TEST POINT	10358	1095D

Table C-12. 8131A Option 020 Timing Board Parts List (continued)

Reference	HP Part #	CD	Qty	Description	Manuf'r	Part #
A5 TP524	0360-2264	6	1	TERM.-TEST POINT	10358	1095D
A5 TP611	0360-2264	6	1	TERM.-TEST POINT	10358	1095D
A5 TP623	0360-2264	6	1	TERM.-TEST POINT	10358	1095D
A5 TP624	0360-2264	6	1	TERM.-TEST POINT	10358	1095D
A5 TP711	0360-2264	6	1	TERM.-TEST POINT	10358	1095D
A5 TP723	0360-2264	6	1	TERM.-TEST POINT	10358	1095D
A5 TP724	0360-2264	6	1	TERM.-TEST POINT	10358	1095D
A5 U100	1820-3665	0	1	IC-MM74HCT245N	01698	SN74HCT245N
A5 U101	1820-3847	0	1	IC-MM74HCT138N	01698	SN74HCT138N
A5 U102	1820-3082	5	1	IC-MC74HC374N	01698	SN74HC374N
A5 U103	1820-3082	5	1	IC-MC74HC374N	01698	SN74HC374N
A5 U104	1820-3847	0	1	IC-MM74HCT138N	01698	SN74HCT138N
A5 U105	1820-3082	5	1	IC-MC74HC374N	01698	SN74HC374N
A5 U106	1820-3082	5	1	IC-MC74HC374N	01698	SN74HC374N
A5 U107	1820-3847	0	1	IC-MM74HCT138N	01698	SN74HCT138N
A5 U108	1820-3082	5	1	IC-MC74HC374N	01698	SN74HC374N
A5 U109	1820-3847	0	1	IC-MM74HCT138N	01698	SN74HCT138N
A5 U110	1820-3082	5	1	IC-MC74HC374N	01698	SN74HC374N
A5 U111	1820-3082	5	1	IC-MC74HC374N	01698	SN74HC374N
A5 U112	1818-3164	9	1	IC X2816BP	10572	X2816BP
A5 U200	1NB7-8008	1	1	SYNC COMP HYBRI	28480	1NB7-8008
A5 U201	1826-0544	0	1	IC-V RGLTR	02037	
A5 U202	1820-3082	5	1	IC-MC74HC374N	01698	SN74HC374N
A5 U203	1826-0550	8	1	D/A 8-BIT	02910	DAC08EN
A5 U204	1820-0493	6	1	IC 307	03406	LM307N
A5 U300	1DP9-0002	0	1	IC T1671	28480	1DP9-0002
A5 U301	1DP6-0001	3	1	IC COUNTER 200M	28480	1DP6-0001
A5 U303	1820-4995	1	1	IC-TC74HC592P	06354	TC74HC592P
A5 U304	1820-4995	1	1	IC-TC74HC592P	06354	TC74HC592P
A5 U305	1820-5067	0	1	IC-74AC74PC	03406	74AC74PC

Table C-12. 8131A Option 020 Timing Board Parts List (continued)

Reference	HP Part #	CD	Qty	Description	Manuf'r	Part #
A5 U306	1820-5067	0	1	IC-74AC74PC	03406	74AC74PC
A5 U307	1820-3298	5	1	IC-MM74HC32N	02037	MC74HC32N
A5 U310	1826-1553	3	1	IC 1014	10858	LT1014DN
A5 U311	1826-0774	8	1	IC LM385BZ-1.2	03406	LM385BZ-1.2
A5 U312	1826-1341	7	1	D/A 12-DGT	03406	DAC1232LCD
A5 U313	1826-1409	8	1	IC 1013	10858	LT1013CN8
A5 U314	1826-0315	3	1	IC 348	03406	LM348N
A5 U318	1826-0916	0	1	ANLG SW AD7511DI	03285	AD7511DIKN
A5 U400	1DP9-0001	9	1	IC TIMG GEN 500	28480	1DP9-0001
A5 U401	1DP6-0001	3	1	IC COUNTER 200M	28480	1DP6-0001
A5 U410	1826-1553	3	1	IC 1014	10858	LT1014DN
A5 U411	1826-0774	8	1	IC LM385BZ-1.2	03406	LM385BZ-1.2
A5 U412	1826-1341	7	1	D/A 12-DGT	03406	DAC1232LCD
A5 U413	1826-1409	8	1	IC 1013	10858	LT1013CN8
A5 U414	1826-0315	3	1	IC 348	03406	LM348N
A5 U418	1826-0916	0	1	ANLG SW AD7511DI	03285	AD7511DIKN
A5 U500	1DP9-0001	9	1	IC TIMG GEN 500	28480	1DP9-0001
A5 U501	1DP6-0001	3	1	IC COUNTER 200M	28480	1DP6-0001
A5 U510	1826-1553	3	1	IC 1014	10858	LT1014DN
A5 U511	1826-0774	8	1	IC LM385BZ-1.2	03406	LM385BZ-1.2
A5 U512	1826-1341	7	1	D/A 12-DGT	03406	DAC1232LCD
A5 U513	1826-1409	8	1	IC 1013	10858	LT1013CN8
A5 U514	1826-0315	3	1	IC 348	03406	LM348N
A5 U518	1826-0916	0	1	ANLG SW AD7511DI	03285	AD7511DIKN
A5 U600	1DP9-0001	9	1	IC TIMG GEN 500	28480	1DP9-0001
A5 U601	1DP6-0001	3	1	IC COUNTER 200M	28480	1DP6-0001
A5 U610	1826-1553	3	1	IC 1014	10858	LT1014DN
A5 U611	1826-0774	8	1	IC LM385BZ-1.2	03406	LM385BZ-1.2
A5 U612	1826-1341	7	1	D/A 12-DGT	03406	DAC1232LCD
A5 U613	1826-1409	8	1	IC 1013	10858	LT1013CN8

Table C-12. 8131A Option 020 Timing Board Parts List (continued)

Reference	HP Part #	CD	Qty	Description	Manuf'r	Part #
A5 U614	1826-0315	3	1	IC 348	03406	LM348N
A5 U618	1826-0916	0	1	ANLG SW AD7511DI	03285	AD7511DIKN
A5 U700	1DP9-0001	9	1	IC TIMG GEN 500	28480	1DP9-0001
A5 U701	1DP6-0001	3	1	IC COUNTER 200M	28480	1DP6-0001
A5 U710	1826-1553	3	1	IC 1014	10858	LT1014DN
A5 U711	1826-0774	8	1	IC LM385BZ-1.2	03406	LM385BZ-1.2
A5 U712	1826-1341	7	1	D/A 12-DGT	03406	DAC1232LCD
A5 U713	1826-1409	8	1	IC 1013	10858	LT1013CN8
A5 U714	1826-0315	3	1	IC 348	03406	LM348N
A5 U718	1826-0916	0	1	ANLG SW AD7511DI	03285	AD7511DIKN
A5 VR300	1902-0955	9	1	DIO-ZNR 7.5V 5%	02037	
A5 VR400	1902-0955	9	1	DIO-ZNR 7.5V 5%	02037	
A5 VR500	1902-0955	9	1	DIO-ZNR 7.5V 5%	02037	
A5 VR600	1902-0955	9	1	DIO-ZNR 7.5V 5%	02037	
A5 VR700	1902-0955	9	1	DIO-ZNR 7.5V 5%	02037	
A5 W100	1258-0141	8	1	JUMPER-REM	01380	530153-2
A5 W300	08131-61650	4	1	CBL AY PC 15CM	28480	08131-61650
A5 W301	08131-61655	9	1	CBL AY TROUT45C	28480	08131-61655
A5 W400	08131-61672	0	1	CBL SET DELAY A	28480	08131-61672
A5 W500	08131-61670	8	1	CBL SET OUT30-5	28480	08131-61670
A5 W600	08131-61672	0	1	CBL SET DELAY A	28480	08131-61672
A5 W700	08131-61671	9	1	CBL SET DEL27-3	28480	08131-61671

Channel 1 Board
Option 020

Table C-13. 8131A Option 020 Channel 1 Board Parts List

Reference	HP Part #	CD	Qty	Description	Manuf'r	Part #
A26	08131-66527	4	1	BD AY CHAN 1	28480	08131-66527
A26A416	08131-66417	0	1	BD AY TRANSDUCE	28480	08131-66416
A26C100	0160-5746	1	1	CAP 0.1uF 50 V	06121	B37987-T5104-M11
A26C101	0160-5332	1	1	CAP 0.1uF 50 V	02010	MD015C104MABH
A26C102	0160-5332	1	1	CAP 0.1uF 50 V	02010	MD015C104MABH
A26C103	0160-5730	3	1	CAP 100pF 100 V	06121	B37979-J1101-J034
A26C104	0160-5730	3	1	CAP 100pF 100 V	06121	B37979-J1101-J034
A26C105	0160-5730	3	1	CAP 100pF 100 V	06121	B37979-J1101-J034
A26C106	0160-5726	7	1	CAP 0.01uF 100 V	06121	B37987-J1103-M034
A26C107	0160-5726	7	1	CAP 0.01uF 100 V	06121	B37987-J1103-M034
A26C108	0160-5332	1	1	CAP 0.1uF 50 V	02010	MD015C104MABH
A26C109	0160-5332	1	1	CAP 0.1uF 50 V	02010	MD015C104MABH
A26C111	0160-5728	9	1	CAP 1000pF 100 V	06121	B37986-J1102-J034
A26C113	0160-5728	9	1	CAP 1000pF 100 V	06121	B37986-J1102-J034
A26C115	0160-5728	9	1	CAP 1000pF 100 V	06121	B37986-J1102-J034

Table C-13. 8131A Option 020 Channel 1 Board Parts List (continued)

Reference	HP Part #	CD	Qty	Description	Manuf'r	Part #
A26C117	0160-5728	9	1	CAP 1000pF 100 V	06121	B37986-J1102-J034
A26C119	0160-5728	9	1	CAP 1000pF 100 V	06121	B37986-J1102-J034
A26C121	0160-5728	9	1	CAP 1000pF 100 V	06121	B37986-J1102-J034
A26C125	0160-6623	5	1	CAP 0.1uF 50 V	02010	SA115C104MAAH
A26C126	0160-6500	7	1	CAP 0.01uF 100 V	02010	SA101C103KAAH
A26C127	0160-6500	7	1	CAP 0.01uF 100 V	02010	SA101C103KAAH
A26C129	0160-5728	9	1	CAP 1000pF 100 V	06121	B37986-J1102-J034
A26C130	0160-5332	1	1	CAP 0.1uF 50 V	02010	MD015C104MABH
A26C131	0160-5332	1	1	CAP 0.1uF 50 V	02010	MD015C104MABH
A26C132	0160-5332	1	1	CAP 0.1uF 50 V	02010	MD015C104MABH
A26C133	0160-5726	7	1	CAP 0.01uF 100 V	06121	B37987-J1103-M034
A26C134	0160-5726	7	1	CAP 0.01uF 100 V	06121	B37987-J1103-M034
A26C135	0160-5728	9	1	CAP 1000pF 100 V	06121	B37986-J1102-J034
A26C136	0160-5728	9	1	CAP 1000pF 100 V	06121	B37986-J1102-J034
A26C139	0160-5332	1	1	CAP 0.1uF 50 V	02010	MD015C104MABH
A26C140	0160-5332	1	1	CAP 0.1uF 50 V	02010	MD015C104MABH
A26C141	0160-6500	7	1	CAP 0.01uF 100 V	02010	SA101C103KAAH
A26C142	0160-6500	7	1	CAP 0.01uF 100 V	02010	SA101C103KAAH
A26C143	0160-5332	1	1	CAP 0.1uF 50 V	02010	MD015C104MABH
A26C401	0160-5726	7	1	CAP 0.01uF 100 V	06121	B37987-J1103-M034
A26C402	0160-5728	9	1	CAP 1000pF 100 V	06121	B37986-J1102-J034
A26C403	0160-5726	7	1	CAP 0.01uF 100 V	06121	B37987-J1103-M034
A26C404	0160-5741	6	1	CAP 47pF 100 V	06121	B37979-J1470-J034
A26C405	0160-5728	9	1	CAP 1000pF 100 V	06121	B37986-J1102-J034
A26C407	0160-5728	9	1	CAP 1000pF 100 V	06121	B37986-J1102-J034
A26C409	0160-5728	9	1	CAP 1000pF 100 V	06121	B37986-J1102-J034
A26C410	0160-5728	9	1	CAP 1000pF 100 V	06121	B37986-J1102-J034
A26C411	0160-5730	3	1	CAP 100pF 100 V	06121	B37979-J1101-J034
A26C412	0160-5730	3	1	CAP 100pF 100 V	06121	B37979-J1101-J034
A26C413	0160-5730	3	1	CAP 100pF 100 V	06121	B37979-J1101-J034

Table C-13. 8131A Option 020 Channel 1 Board Parts List (continued)

Reference	HP Part #	CD	Qty	Description	Manuf'r	Part #
A26C414	0160-5730	3	1	CAP 100pF 100 V	06121	B37979-J1101-J034
A26C415	0160-5726	7	1	CAP 0.01uF 100 V	06121	B37987-J1103-M034
A26C416	0160-6500	7	1	CAP 0.01uF 100 V	02010	SA101C103KAAH
A26C417	0160-6500	7	1	CAP 0.01uF 100 V	02010	SA101C103KAAH
A26C418	0160-5726	7	1	CAP 0.01uF 100 V	06121	B37987-J1103-M034
A26C419	0160-6500	7	1	CAP 0.01uF 100 V	02010	SA101C103KAAH
A26C420	0160-5726	7	1	CAP 0.01uF 100 V	06121	B37987-J1103-M034
A26C421	0160-5741	6	1	CAP 47pF 100 V	06121	B37979-J1470-J034
A26C422	0160-5728	9	1	CAP 1000pF 100 V	06121	B37986-J1102-J034
A26C425	0160-5726	7	1	CAP 0.01uF 100 V	06121	B37987-J1103-M034
A26C426	0160-6500	7	1	CAP 0.01uF 100 V	02010	SA101C103KAAH
A26C427	0160-5746	1	1	CAP 0.1uF 50 V	06121	B37987-T5104-M11
A26C429	0160-5726	7	1	CAP 0.01uF 100 V	06121	B37987-J1103-M034
A26C430	0160-5726	7	1	CAP 0.01uF 100 V	06121	B37987-J1103-M034
A26C431	0160-6500	7	1	CAP 0.01uF 100 V	02010	SA101C103KAAH
A26C432	0160-6500	7	1	CAP 0.01uF 100 V	02010	SA101C103KAAH
A26C433	0160-6500	7	1	CAP 0.01uF 100 V	02010	SA101C103KAAH
A26C434	0160-5740	5	1	CAP 33pF 100 V	06121	B37979-J1330-J034
A26C435	0160-6500	7	1	CAP 0.01uF 100 V	02010	SA101C103KAAH
A26C436	0160-6500	7	1	CAP 0.01uF 100 V	02010	SA101C103KAAH
A26C437	0160-6500	7	1	CAP 0.01uF 100 V	02010	SA101C103KAAH
A26C439	0160-3873	1	1	CAP 4.7pF 200 V	06352	FD12C0G2D4R7D
A26C440	0160-5747	2	1	CAP 0.047uF 50 V	06121	B37987-J5473-M034
A26C441	0160-5747	2	1	CAP 0.047uF 50 V	06121	B37987-J5473-M034
A26C450	0160-3873	1	1	CAP 4.7pF 200 V	06352	FD12C0G2D4R7D
A26C451	0160-6500	7	1	CAP 0.01uF 100 V	02010	SA101C103KAAH
A26C452	0160-6500	7	1	CAP 0.01uF 100 V	02010	SA101C103KAAH
A26C453	0160-6500	7	1	CAP 0.01uF 100 V	02010	SA101C103KAAH
A26C460	0160-5737	0	1	CAP 68pF 100 V	06121	B37979-J1680-J034
A26C461	0160-5737	0	1	CAP 68pF 100 V	06121	B37979-J1680-J034

Table C-13. 8131A Option 020 Channel 1 Board Parts List (continued)

Reference	HP Part #	CD	Qty	Description	Manuf'r	Part #
A26C470	0160-5726	7	1	CAP 0.01uF 100 V	06121	B37987-J1103-M034
A26C471	0160-5728	9	1	CAP 1000pF 100 V	06121	B37986-J1102-J034
A26C472	0160-5746	1	1	CAP 0.1uF 50 V	06121	B37987-T5104-M11
A26C473	0160-5726	7	1	CAP 0.01uF 100 V	06121	B37987-J1103-M034
A26C474	0160-5728	9	1	CAP 1000pF 100 V	06121	B37986-J1102-J034
A26C475	0160-6500	7	1	CAP 0.01uF 100 V	02010	SA101C103KAAH
A26C476	0160-6623	5	1	CAP 0.1uF 50 V	02010	SA115C104MAAH
A26C477	0160-5728	9	1	CAP 1000pF 100 V	06121	B37986-J1102-J034
A26C478	0160-5726	7	1	CAP 0.01uF 100 V	06121	B37987-J1103-M034
A26C479	0160-6623	5	1	CAP 0.1uF 50 V	02010	SA115C104MAAH
A26C480	0160-5728	9	1	CAP 1000pF 100 V	06121	B37986-J1102-J034
A26C481	0160-5728	9	1	CAP 1000pF 100 V	06121	B37986-J1102-J034
A26C482	0160-5728	9	1	CAP 1000pF 100 V	06121	B37986-J1102-J034
A26C483	0160-6500	7	1	CAP 0.01uF 100 V	02010	SA101C103KAAH
A26C484	0160-5746	1	1	CAP 0.1uF 50 V	06121	B37987-T5104-M11
A26C485	0160-5746	1	1	CAP 0.1uF 50 V	06121	B37987-T5104-M11
A26C486	0160-5746	1	1	CAP 0.1uF 50 V	06121	B37987-T5104-M11
A26C601	0160-6500	7	1	CAP 0.01uF 100 V	02010	SA101C103KAAH
A26C604	0160-5726	7	1	CAP 0.01uF 100 V	06121	B37987-J1103-M034
A26C605	0160-5726	7	1	CAP 0.01uF 100 V	06121	B37987-J1103-M034
A26C606	0160-6500	7	1	CAP 0.01uF 100 V	02010	SA101C103KAAH
A26C607	0160-5726	7	1	CAP 0.01uF 100 V	06121	B37987-J1103-M034
A26C608	0160-5746	1	1	CAP 0.1uF 50 V	06121	B37987-T5104-M11
A26C609	0160-5726	7	1	CAP 0.01uF 100 V	06121	B37987-J1103-M034
A26C610	0160-5746	1	1	CAP 0.1uF 50 V	06121	B37987-T5104-M11
A26C611	0160-5726	7	1	CAP 0.01uF 100 V	06121	B37987-J1103-M034
A26C613	0160-5726	7	1	CAP 0.01uF 100 V	06121	B37987-J1103-M034
A26C614	0160-5746	1	1	CAP 0.1uF 50 V	06121	B37987-T5104-M11
A26C615	0160-6500	7	1	CAP 0.01uF 100 V	02010	SA101C103KAAH
A26C616	0160-6500	7	1	CAP 0.01uF 100 V	02010	SA101C103KAAH

Table C-13. 8131A Option 020 Channel 1 Board Parts List (continued)

Reference	HP Part #	CD	Qty	Description	Manuf'r	Part #
A26C617	0160-6500	7	1	CAP 0.01uF 100 V	02010	SA101C103KAAH
A26C618	0160-5746	1	1	CAP 0.1uF 50 V	06121	B37987-T5104-M11
A26CP110	0180-0116	1	1	CAP 6.8uF 35 V	04200	150D685X9035B2-DYS
A26CP112	0180-0374	3	1	CAP 10uF 20 V	04200	150D106X9020B2-DYS
A26CP114	0180-0374	3	1	CAP 10uF 20 V	04200	150D106X9020B2-DYS
A26CP116	0180-0116	1	1	CAP 6.8uF 35 V	04200	150D685X9035B2-DYS
A26CP118	0180-0116	1	1	CAP 6.8uF 35 V	04200	150D685X9035B2-DYS
A26CP120	0180-0374	3	1	CAP 10uF 20 V	04200	150D106X9020B2-DYS
A26CP122	0180-2205	3	1	CAP 0.33uF 35 V	04200	150D334X9035A2-DYS
A26CP123	0180-4129	4	1	CAP 1uF 35 V	04200	173D105X9035V
A26CP128	0180-4129	4	1	CAP 1uF 35 V	04200	173D105X9035V
A26CP438	0180-4129	4	1	CAP 1uF 35 V	04200	173D105X9035V
A26CP439	0180-4129	4	1	CAP 1uF 35 V	04200	173D105X9035V
A26CR100	1901-0535	9	1	DIO- SCHOTTKY SM	02062	50825511
A26CR108	1901-0535	9	1	DIO- SCHOTTKY SM	02062	50825511
A26CR109	1901-0535	9	1	DIO- SCHOTTKY SM	02062	50825511
A26CR111	1901-0535	9	1	DIO- SCHOTTKY SM	02062	50825511
A26CR112	1901-0535	9	1	DIO- SCHOTTKY SM	02062	50825511
A26CR122	1901-0033	2	1	DIO-GEN PRP	03406	
A26CR123	1901-0535	9	1	DIO- SCHOTTKY SM	02062	50825511
A26CR124	1901-0535	9	1	DIO- SCHOTTKY SM	02062	50825511
A26CR125	1901-0535	9	1	DIO- SCHOTTKY SM	02062	50825511
A26CR126	1901-0535	9	1	DIO- SCHOTTKY SM	02062	50825511
A26CR414	1901-0033	2	1	DIO-GEN PRP	03406	
A26CR415	1901-0732	8	1	DIO-PWR RECT	02037	SR3010-4RL
A26CR416	1901-0732	8	1	DIO-PWR RECT	02037	SR3010-4RL
A26CR417	1901-1098	1	1	DIO-1N4150	00746	
A26CR418	1901-1098	1	1	DIO-1N4150	00746	
A26CR419	1901-1098	1	1	DIO-1N4150	00746	
A26CR420	1901-1098	1	1	DIO-1N4150	00746	

Table C-13. 8131A Option 020 Channel 1 Board Parts List (continued)

Reference	HP Part #	CD	Qty	Description	Manuf'r	Part #
A26CR601	1901-0535	9	1	DIO- SCHOTTKY SM	02062	50825511
A26CR602	1901-1098	1	1	DIO-1N4150	00746	
A26J1	1251-8324	1	1	CONN-POST-TP-HDR	04486	G06M96P4BEBL-004-715
A26J101	1251-1556	7	4	CONN-SGL CONT	01075	006-4844-00-0-990
A26J102	1251-1556	7	4	CONN-SGL CONT	01075	006-4844-00-0-990
A26J103	1251-4682	6	1	CONN-POST-TP-HDR	03394	1102-1-103-02
A26J403	1252-2649	3	1	CONN ELAST 43LG	09922	NE 0.2P 43.0L 3.0H 3.6W
A26J404	1252-2649	3	1	CONN ELAST 43LG	09922	NE 0.2P 43.0L 3.0H 3.6W
A26J405	1252-2650	6	1	CONN ELAST 30LG	09922	NE 0.2P 30.0L 3.0H 3.6W
A26J406	1252-2651	7	1	CONN ELAST 5LG	09922	NE 0.2P 5.0L 3.0H 3.6W
A26J407	1252-2651	7	1	CONN ELAST 5LG	09922	NE 0.2P 5.0L 3.0H 3.6W
A26J408	1252-2651	7	1	CONN ELAST 5LG	09922	NE 0.2P 5.0L 3.0H 3.6W
A26J423	1252-2648	2	1	CONN ELAST 30LG	09922	NE 0.4P 30.0L 3.5H 4.2W
A26J424	1252-2648	2	1	CONN ELAST 30LG	09922	NE 0.4P 30.0L 3.5H 4.2W
A26J425	1252-2647	1	1	CONN ELAST 0.4P	09922	NE 0.4P 43.0L 3.5H 4.2W
A26J426	1252-2647	1	1	CONN ELAST 0.4P	09922	NE 0.4P 43.0L 3.5H 4.2W
A26K403	0955-0452	1	1	SW-COAX SMA	02574	S-4845
A26K404	0955-0452	1	1	SW-COAX SMA	02574	S-4845
A26L100	9100-1788	6	1	CORE-FERRITE	02995	VK200 20/4B
A26L101	9100-1788	6	1	CORE-FERRITE	02995	VK200 20/4B
A26L102	9100-1788	6	1	CORE-FERRITE	02995	VK200 20/4B
A26L103	9100-1788	6	1	CORE-FERRITE	02995	VK200 20/4B
A26L104	9100-1788	6	1	CORE-FERRITE	02995	VK200 20/4B
A26L105	9100-1788	6	1	CORE-FERRITE	02995	VK200 20/4B
A26L401	9100-2257	6	1	L 820NH +-10%	03273	10M820K
A26L402	9100-2256	5	1	L 560NH +-10%	03273	10M560K
A26L403	9100-2257	6	1	L 820NH +-10%	03273	10M820K
A26L404	9100-2256	5	1	L 560NH +-10%	03273	10M560K
A26MP1	08131-00601	7	1	SHIELD	28480	08131-00601
A26MP2	0403-0285	9	2	BMPR FT-ADH MTG	04726	SJ-5018 GRAY
A26MP16	3050-0152	3	3	WSHR-SHLDR	04604	1462

Table C-13. 8131A Option 020 Channel 1 Board Parts List (continued)

Reference	HP Part #	CD	Qty	Description	Manuf'r	Part #
A26MP20	0515-0659	8	4	SCR-MACHINE	05610	
A26MP21	3050-0960	1	2	WASHER-SHLDR 3.0	05947	V5359
A26MP22	3050-0098	6	2	WSHR-FL MTLC	04939	AN960 C2
A26MP141	0340-1212	0	1	INSULATOR	28480	0340-1212
A26MP142	08131-21101	6	1	HEATSINK TUB	28480	08131-21101
A26MP143	08131-40503	2	1	FRAME PLASTIC	28480	08131-40503
A26MP144	08131-04104	3	1	COVER	28480	08131-04104
A26MP145	08131-05401	5	1	DUST HYBRD COVE	28480	08131-05401
A26MP403	1205-0295	2	1	HEAT SINK	02608	6107B-14
A26MP404	1205-0295	2	1	HEAT SINK	02608	6107B-14
A26MP405	1205-0295	2	1	HEAT SINK	02608	6107B-14
A26MP413	0340-1074	2	1	INSUL-XSTR	05447	3223-07FR-58-AC
A26MP414	0340-1074	2	1	INSUL-XSTR	05447	3223-07FR-58-AC
A26MP415	0340-1074	2	1	INSUL-XSTR	05447	3223-07FR-58-AC
A26MP603	1205-0295	2	1	HEAT SINK	02608	6107B-14
A26MP609	1205-0011	0	1	HEAT SINK	02608	2226B
A26MP613	0340-1074	2	1	INSUL-XSTR	05447	3223-07FR-58-AC
A26MP618	0340-1074	2	1	INSUL-XSTR	05447	3223-07FR-58-AC
A26Q100	1854-1028	6	1	XSTR NPN SI	02037	2N3904
A26Q101	1853-0314	9	1	XSTR PNP 2N2905A	02037	2N2905A
A26Q102	1854-0637	1	1	XSTR NPN 2N2219A	02037	2N2219A
A26Q401	1854-0583	6	1	XSTR NPN SI	02037	MPS-A18
A26Q403	1854-0828	2	1	XSTR NPN SI	00039	NTD560
A26Q404	1853-0468	4	1	XSTR PNP SI DARL	02037	TIP-127
A26Q405	1855-0548	5	1	MOSFET N-CHAN	02037	BUZ71A
A26Q406	1855-0751	2	1	MOSFET N-CHAN	02883	VN0808M
A26Q411	1854-0583	6	1	XSTR NPN SI	02037	MPS-A18
A26Q412	1855-0751	2	1	MOSFET N-CHAN	02883	VN0808M
A26Q413	1855-0751	2	1	MOSFET N-CHAN	02883	VN0808M
A26Q415	1855-0689	5	1	J-FET CHIP P-CHA	02037	2N5461

Table C-13. 8131A Option 020 Channel 1 Board Parts List (continued)

Reference	HP Part #	CD	Qty	Description	Manuf'r	Part #
A26Q416	1853-0563	0	1	XSTR PNP SI	02037	2N3906(SEL)
A26Q430	1853-0563	0	1	XSTR PNP SI	02037	2N3906(SEL)
A26Q431	1853-0563	0	1	XSTR PNP SI	02037	2N3906(SEL)
A26Q603	1855-0548	5	1	MOSFET N-CHAN	02037	BUZ71A
A26Q605	1854-1028	6	1	XSTR NPN SI	02037	2N3904
A26Q606	1855-0751	2	1	MOSFET N-CHAN	02883	VN0808M
A26Q608	1853-0509	4	1	XSTR PNP	01698	TIP42A
A26Q609	1853-0314	9	1	XSTR PNP 2N2905A	02037	2N2905A
A26R100	0757-0442	9	1	RES 10K 1% .125W	00746	CRB14 OR CRB25
A26R101	0757-0465	6	1	RES 100K 1% .125	00746	CRB14 OR CRB25
A26R102	0698-8827	4	1	RES 1M 1% .125W	00746	CRB14 OR CRB25
A26R105	0698-3452	1	1	RES 147K 1% .125	00746	CRB14 OR CRB25
A26R106	0698-3132	4	1	RES 261 1% .125W	00746	CRB14 OR CRB25
A26R107	0698-3439	4	1	RES 178 1% .125W	00746	CRB14 OR CRB25
A26R108	0698-6360	6	1	RES 10K .1% .125	00746	CRB14 OR CRB25
A26R109	0698-6360	6	1	RES 10K .1% .125	00746	CRB14 OR CRB25
A26R110	0698-6630	3	1	RES 20K .1% .125	00746	CRB14 OR CRB25
A26R111	0698-6360	6	1	RES 10K .1% .125	00746	CRB14 OR CRB25
A26R112	0757-0442	9	1	RES 10K 1% .125W	00746	CRB14 OR CRB25
A26R113	0698-3279	0	1	RES 4.99K 1% .12	00746	CRB14 OR CRB25
A26R114	0757-0439	4	1	RES 6.81K 1% .12	00746	CRB14 OR CRB25
A26R115	0757-0280	3	1	RES 1K 1% .125W	00746	CRB14 OR CRB25
A26R116	0757-0280	3	1	RES 1K 1% .125W	00746	CRB14 OR CRB25
A26R117	0757-0280	3	1	RES 1K 1% .125W	00746	CRB14 OR CRB25
A26R118	0757-0280	3	1	RES 1K 1% .125W	00746	CRB14 OR CRB25
A26R119	0757-0442	9	1	RES 10K 1% .125W	00746	CRB14 OR CRB25
A26R120	0757-0274	5	1	RES 1.21K 1% .12	00746	CRB14 OR CRB25
A26R121	0757-0438	3	1	RES 5.11K 1% .12	00746	CRB14 OR CRB25
A26R130	0757-0278	9	1	RES 1.78K 1% .12	00746	CRB14 OR CRB25
A26R131	0698-3153	9	1	RES 3.83K 1% .12	00746	CRB14 OR CRB25

Table C-13. 8131A Option 020 Channel 1 Board Parts List (continued)

Reference	HP Part #	CD	Qty	Description	Manuf'r	Part #
A26R132	0757-0439	4	1	RES 6.81K 1% .12	00746	CRB14 OR CRB25
A26R135	0757-0439	4	1	RES 6.81K 1% .12	00746	CRB14 OR CRB25
A26R136	0698-3153	9	1	RES 3.83K 1% .12	00746	CRB14 OR CRB25
A26R137	0757-0278	9	1	RES 1.78K 1% .12	00746	CRB14 OR CRB25
A26R140	0698-6360	6	1	RES 10K .1% .125	00746	CRB14 OR CRB25
A26R141	0698-6360	6	1	RES 10K .1% .125	00746	CRB14 OR CRB25
A26R142	0698-3279	0	1	RES 4.99K 1% .12	00746	CRB14 OR CRB25
A26R144	0698-3161	9	1	RES 38.3K 1% .12	00746	CRB14 OR CRB25
A26R145	0757-0199	3	1	RES 21.5K 1% .12	00746	CRB14 OR CRB25
A26R146	0757-0416	7	1	RES 511 1% .125W	00746	CRB14 OR CRB25
A26R147	0698-3136	8	1	RES 17.8K 1% .12	00746	CRB14 OR CRB25
A26R148	0757-0442	9	1	RES 10K 1% .125W	00746	CRB14 OR CRB25
A26R149	0757-0416	7	1	RES 511 1% .125W	00746	CRB14 OR CRB25
A26R150	0757-0416	7	1	RES 511 1% .125W	00746	CRB14 OR CRB25
A26R157	0757-0442	9	1	RES 10K 1% .125W	00746	CRB14 OR CRB25
A26R200	1250-2206	4	1	TERM 50 OHM	28480	1250-2206
A26R300	1250-2206	4	1	TERM 50 OHM	28480	1250-2206
A26R400	8159-0005	0	1	RES-ZERO OHMS	01339	L-2007-1
A26R401	0698-3242	7	1	RES 357 1% .125W	00746	CRB14 OR CRB25
A26R402	0757-0280	3	1	RES 1K 1% .125W	00746	CRB14 OR CRB25
A26R403	0698-3558	8	1	RES 4.02K 1% .12	00746	CRB14 OR CRB25
A26R404	8159-0005	0	1	RES-ZERO OHMS	01339	L-2007-1
A26R405	0757-0416	7	1	RES 511 1% .125W	00746	CRB14 OR CRB25
A26R406	0757-0442	9	1	RES 10K 1% .125W	00746	CRB14 OR CRB25
A26R407	0757-0449	6	1	RES 20K 1% .125W	00746	CRB14 OR CRB25
A26R408	0757-0416	7	1	RES 511 1% .125W	00746	CRB14 OR CRB25
A26R410	0698-0084	9	1	RES 2.15K 1% .12	00746	CRB14 OR CRB25
A26R411	0757-0449	6	1	RES 20K 1% .125W	00746	CRB14 OR CRB25
A26R412	0757-0442	9	1	RES 10K 1% .125W	00746	CRB14 OR CRB25
A26R413	0757-0442	9	1	RES 10K 1% .125W	00746	CRB14 OR CRB25

Table C-13. 8131A Option 020 Channel 1 Board Parts List (continued)

Reference	HP Part #	CD	Qty	Description	Manuf'r	Part #
A26R414	0757-0279	0	1	RES 3.16K 1% .12	00746	CRB14 OR CRB25
A26R415	0757-0280	3	1	RES 1K 1% .125W	00746	CRB14 OR CRB25
A26R416	0757-0280	3	1	RES 1K 1% .125W	00746	CRB14 OR CRB25
A26R417	0757-0280	3	1	RES 1K 1% .125W	00746	CRB14 OR CRB25
A26R418	0757-0280	3	1	RES 1K 1% .125W	00746	CRB14 OR CRB25
A26R419	0757-0438	3	1	RES 5.11K 1% .12	00746	CRB14 OR CRB25
A26R420	0757-0442	9	1	RES 10K 1% .125W	00746	CRB14 OR CRB25
A26R421	0757-0442	9	1	RES 10K 1% .125W	00746	CRB14 OR CRB25
A26R422	0757-0416	7	1	RES 511 1% .125W	00746	CRB14 OR CRB25
A26R423	0757-0442	9	1	RES 10K 1% .125W	00746	CRB14 OR CRB25
A26R424	0698-4477	2	1	RES 10.5K 1% .12	00746	CRB14 OR CRB25
A26R425	0698-4445	4	1	RES 5.76K 1% .12	00746	CRB14 OR CRB25
A26R426	0698-3153	9	1	RES 3.83K 1% .12	00746	CRB14 OR CRB25
A26R427	0757-0442	9	1	RES 10K 1% .125W	00746	CRB14 OR CRB25
A26R428	0698-3430	5	1	RES 21.5 1% .125	00746	CRB14 OR CRB25
A26R429	0757-0284	7	1	RES 150 1% .125W	00746	CRB14 OR CRB25
A26R430	0757-0442	9	1	RES 10K 1% .125W	00746	CRB14 OR CRB25
A26R431	0757-0442	9	1	RES 10K 1% .125W	00746	CRB14 OR CRB25
A26R432	0698-3446	3	1	RES 383 1% .125W	00746	CRB14 OR CRB25
A26R434	0757-0999	1	1	RES 47.5 1% .5W	01074	H2
A26R435	0757-0401	0	1	RES 100 1% .125W	00746	CRB14 OR CRB25
A26R436	0698-0085	0	1	RES 2.61K 1% .12	00746	CRB14 OR CRB25
A26R437	0757-0442	9	1	RES 10K 1% .125W	00746	CRB14 OR CRB25
A26R438	0757-0401	0	1	RES 100 1% .125W	00746	CRB14 OR CRB25
A26R439	0757-0442	9	1	RES 10K 1% .125W	00746	CRB14 OR CRB25
A26R440	0757-0444	1	1	RES 12.1K 1% .12	00746	CRB14 OR CRB25
A26R441	0757-0280	3	1	RES 1K 1% .125W	00746	CRB14 OR CRB25
A26R442	0757-0442	9	1	RES 10K 1% .125W	00746	CRB14 OR CRB25
A26R443	0757-0442	9	1	RES 10K 1% .125W	00746	CRB14 OR CRB25
A26R444	0757-0421	4	1	RES 825 1% .125W	00746	CRB14 OR CRB25

Table C-13. 8131A Option 020 Channel 1 Board Parts List (continued)

Reference	HP Part #	CD	Qty	Description	Manuf'r	Part #
A26R445	0698-3152	8	1	RES 3.48K 1% .12	00746	CRB14 OR CRB25
A26R446	0757-0290	5	1	RES 6.19K 1% .12	00746	CRB14 OR CRB25
A26R447	0757-0444	1	1	RES 12.1K 1% .12	00746	CRB14 OR CRB25
A26R448	0698-3156	2	1	RES 14.7K 1% .12	00746	CRB14 OR CRB25
A26R449	0757-0442	9	1	RES 10K 1% .125W	00746	CRB14 OR CRB25
A26R450	0757-0440	7	1	RES 7.5K 1% .125	00746	CRB14 OR CRB25
A26R451	0698-4469	2	1	RES 1.15K 1% .12	00746	CRB14 OR CRB25
A26R452	0757-0428	1	1	RES 1.62K 1% .12	00746	CRB14 OR CRB25
A26R453	0757-0290	5	1	RES 6.19K 1% .12	00746	CRB14 OR CRB25
A26R454	0757-0442	9	1	RES 10K 1% .125W	00746	CRB14 OR CRB25
A26R456	0698-3444	1	1	RES 316 1% .125W	00746	CRB14 OR CRB25
A26R457	0757-0442	9	1	RES 10K 1% .125W	00746	CRB14 OR CRB25
A26R458	0757-0442	9	1	RES 10K 1% .125W	00746	CRB14 OR CRB25
A26R459	0757-0442	9	1	RES 10K 1% .125W	00746	CRB14 OR CRB25
A26R460	0757-0442	9	1	RES 10K 1% .125W	00746	CRB14 OR CRB25
A26R464	0757-0439	4	1	RES 6.81K 1% .12	00746	CRB14 OR CRB25
A26R465	0698-0085	0	1	RES 2.61K 1% .12	00746	CRB14 OR CRB25
A26R466	0698-0085	0	1	RES 2.61K 1% .12	00746	CRB14 OR CRB25
A26R467	0757-0442	9	1	RES 10K 1% .125W	00746	CRB14 OR CRB25
A26R468	0757-0442	9	1	RES 10K 1% .125W	00746	CRB14 OR CRB25
A26R469	0757-0416	7	1	RES 511 1% .125W	00746	CRB14 OR CRB25
A26R470	0698-4448	7	1	RES 294 1% .125W	00746	CRB14 OR CRB25
A26R471	0698-3438	3	1	RES 147 1% .125W	00746	CRB14 OR CRB25
A26R472	0698-4037	0	1	RES 46.4 1% .125	00746	CRB14 OR CRB25
A26R473	0757-0442	9	1	RES 10K 1% .125W	00746	CRB14 OR CRB25
A26R474	0757-0442	9	1	RES 10K 1% .125W	00746	CRB14 OR CRB25
A26R475	0757-1094	9	1	RES 1.47K 1% .12	00746	CRB14 OR CRB25
A26R476	0698-3439	4	1	RES 178 1% .125W	00746	CRB14 OR CRB25
A26R477	0698-3444	1	1	RES 316 1% .125W	00746	CRB14 OR CRB25
A26R478	0698-3444	1	1	RES 316 1% .125W	00746	CRB14 OR CRB25

Table C-13. 8131A Option 020 Channel 1 Board Parts List (continued)

Reference	HP Part #	CD	Qty	Description	Manuf'r	Part #
A26R479	0757-0442	9	1	RES 10K 1% .125W	00746	CRB14 OR CRB25
A26R480	0757-0442	9	1	RES 10K 1% .125W	00746	CRB14 OR CRB25
A26R484	0757-0439	4	1	RES 6.81K 1% .12	00746	CRB14 OR CRB25
A26R486	0757-0442	9	1	RES 10K 1% .125W	00746	CRB14 OR CRB25
A26R487	0757-0442	9	1	RES 10K 1% .125W	00746	CRB14 OR CRB25
A26R488	0757-0280	3	1	RES 1K 1% .125W	00746	CRB14 OR CRB25
A26R489	0757-0280	3	1	RES 1K 1% .125W	00746	CRB14 OR CRB25
A26R490	0757-0442	9	1	RES 10K 1% .125W	00746	CRB14 OR CRB25
A26R491	0757-0442	9	1	RES 10K 1% .125W	00746	CRB14 OR CRB25
A26R492	0757-0466	7	1	RES 110K 1% .125	00746	CRB14 OR CRB25
A26R493	0698-3515	7	1	RES 5.9K 1% .125	00746	CRB14 OR CRB25
A26R494	0757-0416	7	1	RES 511 1% .125W	00746	CRB14 OR CRB25
A26R498	0757-0442	9	1	RES 10K 1% .125W	00746	CRB14 OR CRB25
A26R499	0757-0442	9	1	RES 10K 1% .125W	00746	CRB14 OR CRB25
A26R500	0757-0442	9	1	RES 10K 1% .125W	00746	CRB14 OR CRB25
A26R501	0757-0441	8	1	RES 8.25K 1% .12	00746	CRB14 OR CRB25
A26R504	8159-0005	0	1	RES-ZERO OHMS	01339	L-2007-1
A26R508	0757-0442	9	1	RES 10K 1% .125W	00746	CRB14 OR CRB25
A26R509	0757-0441	8	1	RES 8.25K 1% .12	00746	CRB14 OR CRB25
A26R510	0757-0438	3	1	RES 5.11K 1% .12	00746	CRB14 OR CRB25
A26R511	0683-2265	1	1	RES 22M 5% .25W	01607	CB2265
A26R512	0698-8958	2	1	RES 511K 1% .125	00746	CRB14 OR CRB25
A26R513	0683-2265	1	1	RES 22M 5% .25W	01607	CB2265
A26R514	0698-8958	2	1	RES 511K 1% .125	00746	CRB14 OR CRB25
A26R519	0757-0280	3	1	RES 1K 1% .125W	00746	CRB14 OR CRB25
A26R520	0757-0442	9	1	RES 10K 1% .125W	00746	CRB14 OR CRB25
A26R521	8159-0005	0	1	RES-ZERO OHMS	01339	L-2007-1
A26R523	0698-3242	7	1	RES 357 1% .125W	00746	CRB14 OR CRB25
A26R524	0757-0416	7	1	RES 511 1% .125W	00746	CRB14 OR CRB25
A26R525	0757-0283	6	1	RES 2K 1% .125W	00746	CRB14 OR CRB25

Table C-13. 8131A Option 020 Channel 1 Board Parts List (continued)

Reference	HP Part #	CD	Qty	Description	Manuf'r	Part #
A26R526	0698-3488	3	1	RES 442 1% .125W	00746	CRB14 OR CRB25
A26R527	0698-3488	3	1	RES 442 1% .125W	00746	CRB14 OR CRB25
A26R530	0698-3558	8	1	RES 4.02K 1% .12	00746	CRB14 OR CRB25
A26R531	0757-0283	6	1	RES 2K 1% .125W	00746	CRB14 OR CRB25
A26R532	0698-0085	0	1	RES 2.61K 1% .12	00746	CRB14 OR CRB25
A26R540	0757-0407	6	1	RES 200 1% .125W	00746	CRB14 OR CRB25
A26R541	0757-0407	6	1	RES 200 1% .125W	00746	CRB14 OR CRB25
A26R550	0757-0416	7	1	RES 511 1% .125W	00746	CRB14 OR CRB25
A26R551	0757-0442	9	1	RES 10K 1% .125W	00746	CRB14 OR CRB25
A26R552	0757-0442	9	1	RES 10K 1% .125W	00746	CRB14 OR CRB25
A26R553	0757-0442	9	1	RES 10K 1% .125W	00746	CRB14 OR CRB25
A26R554	0757-0442	9	1	RES 10K 1% .125W	00746	CRB14 OR CRB25
A26R560	0757-0439	4	1	RES 6.81K 1% .12	00746	CRB14 OR CRB25
A26R561	0757-0442	9	1	RES 10K 1% .125W	00746	CRB14 OR CRB25
A26R562	0757-0442	9	1	RES 10K 1% .125W	00746	CRB14 OR CRB25
A26R563	0757-0439	4	1	RES 6.81K 1% .12	00746	CRB14 OR CRB25
A26R564	0757-0442	9	1	RES 10K 1% .125W	00746	CRB14 OR CRB25
A26R565	0757-0442	9	1	RES 10K 1% .125W	00746	CRB14 OR CRB25
A26R566	0757-0439	4	1	RES 6.81K 1% .12	00746	CRB14 OR CRB25
A26R567	0757-0280	3	1	RES 1K 1% .125W	00746	CRB14 OR CRB25
A26R568	0757-0280	3	1	RES 1K 1% .125W	00746	CRB14 OR CRB25
A26R569	0757-0444	1	1	RES 12.1K 1% .12	00746	CRB14 OR CRB25
A26R570	0698-4123	5	1	RES 499 1% .125W	00746	CRB14 OR CRB25
A26R571	0698-3159	5	1	RES 26.1K 1% .12	00746	CRB14 OR CRB25
A26R572	0698-3159	5	1	RES 26.1K 1% .12	00746	CRB14 OR CRB25
A26R573	0698-4123	5	1	RES 499 1% .125W	00746	CRB14 OR CRB25
A26R574	0698-4123	5	1	RES 499 1% .125W	00746	CRB14 OR CRB25
A26R575	0757-0280	3	1	RES 1K 1% .125W	00746	CRB14 OR CRB25
A26R576	0757-0123	3	1	RES 34.8K 1% .12	00746	CRB14 OR CRB25
A26R577	0757-0123	3	1	RES 34.8K 1% .12	00746	CRB14 OR CRB25

Table C-13. 8131A Option 020 Channel 1 Board Parts List (continued)

Reference	HP Part #	CD	Qty	Description	Manuf'r	Part #
A26R588	0757-0997	9	1	RES 39.2 1% .5W	01074	H2
A26R604	0757-0442	9	1	RES 10K 1% .125W	00746	CRB14 OR CRB25
A26R607	0757-0442	9	1	RES 10K 1% .125W	00746	CRB14 OR CRB25
A26R608	0757-0449	6	1	RES 20K 1% .125W	00746	CRB14 OR CRB25
A26R609	0757-0442	9	1	RES 10K 1% .125W	00746	CRB14 OR CRB25
A26R610	0757-0442	9	1	RES 10K 1% .125W	00746	CRB14 OR CRB25
A26R612	0757-0199	3	1	RES 21.5K 1% .12	00746	CRB14 OR CRB25
A26R613	0698-4425	0	1	RES 1.54K 1% .12	00746	CRB14 OR CRB25
A26R614	0698-6630	3	1	RES 20K .1% .125	00746	CRB14 OR CRB25
A26R615	0698-6624	5	1	RES 2K .1% .125W	00746	CRB14 OR CRB25
A26R617	0698-4437	4	1	RES 2.94K 1% .12	00746	CRB14 OR CRB25
A26R618	0757-0200	7	1	RES 5.62K 1% .12	00746	CRB14 OR CRB25
A26R621	0757-0444	1	1	RES 12.1K 1% .12	00746	CRB14 OR CRB25
A26R622	0757-0283	6	1	RES 2K 1% .125W	00746	CRB14 OR CRB25
A26R624	0757-0442	9	1	RES 10K 1% .125W	00746	CRB14 OR CRB25
A26R625	0757-0280	3	1	RES 1K 1% .125W	00746	CRB14 OR CRB25
A26R626	0757-0442	9	1	RES 10K 1% .125W	00746	CRB14 OR CRB25
A26R628	0757-0441	8	1	RES 8.25K 1% .12	00746	CRB14 OR CRB25
A26R629	0757-0442	9	1	RES 10K 1% .125W	00746	CRB14 OR CRB25
A26R630	0757-0442	9	1	RES 10K 1% .125W	00746	CRB14 OR CRB25
A26R631	0757-0442	9	1	RES 10K 1% .125W	00746	CRB14 OR CRB25
A26R632	0757-0441	8	1	RES 8.25K 1% .12	00746	CRB14 OR CRB25
A26R633	0757-0442	9	1	RES 10K 1% .125W	00746	CRB14 OR CRB25
A26R635	0698-3444	1	1	RES 316 1% .125W	00746	CRB14 OR CRB25
A26R636	0757-0442	9	1	RES 10K 1% .125W	00746	CRB14 OR CRB25
A26R639	0757-0441	8	1	RES 8.25K 1% .12	00746	CRB14 OR CRB25
A26R640	0757-0442	9	1	RES 10K 1% .125W	00746	CRB14 OR CRB25
A26R641	0698-3444	1	1	RES 316 1% .125W	00746	CRB14 OR CRB25
A26R642	0757-0442	9	1	RES 10K 1% .125W	00746	CRB14 OR CRB25
A26R643	0757-0283	6	1	RES 2K 1% .125W	00746	CRB14 OR CRB25

Table C-13. 8131A Option 020 Channel 1 Board Parts List (continued)

Reference	HP Part #	CD	Qty	Description	Manuf'r	Part #
A26R644	0757-0317	7	1	RES 1.33K 1% .12	00746	CRB14 OR CRB25
A26R645	0757-0200	7	1	RES 5.62K 1% .12	00746	CRB14 OR CRB25
A26R646	0698-4431	8	1	RES 2.05K 1% .12	00746	CRB14 OR CRB25
A26R647	0757-0279	0	1	RES 3.16K 1% .12	00746	CRB14 OR CRB25
A26R648	0698-3496	3	1	RES 3.57K 1% .12	00746	CRB14 OR CRB25
A26R649	0757-0424	7	1	RES 1.1K 1% .125	00746	CRB14 OR CRB25
A26R650	0757-0438	3	1	RES 5.11K 1% .12	00746	CRB14 OR CRB25
A26R651	0757-0999	1	1	RES 47.5 1% .5W	01074	H2
A26R652	0757-0280	3	1	RES 1K 1% .125W	00746	CRB14 OR CRB25
A26R653	0757-0280	3	1	RES 1K 1% .125W	00746	CRB14 OR CRB25
A26R999	0699-1503	1	1	RES .05 100% TKF	00746	MCR18EZHJW00E0
A26RA100	1810-0316	1	1	NETWORK-RES DIP	02483	761-3-R10K
A26RV103	2100-3352	7	1	RES-TRMR 1K 10%	03744	3386X-Y46-102
A26RV104	2100-3349	2	1	RES-TRMR 100 10%	03744	3386X-Y46-101
A26RV123	2100-3207	1	1	RES-TRMR 5K 10%	03744	3386X-Y46-502
A26RV404	2100-0554	5	1	RES-TRMR 500 10%	03744	3386P-Y46-501
A26RV435	2100-3207	1	1	RES-TRMR 5K 10%	03744	3386X-Y46-502
A26RV438	2100-3274	2	1	RES-TRMR 10K 10%	03744	3386X-Y46-103
A26RV455	2100-0567	0	1	RES-TRMR 2K 10%	03744	3386P-Y46-202
A26RV461	2100-3274	2	1	RES-TRMR 10K 10%	03744	3386X-Y46-103
A26RV500	2100-3383	4	1	RES-TRMR 50 10%	03744	3386P-Y46-500
A26RV501	2100-3383	4	1	RES-TRMR 50 10%	03744	3386P-Y46-500
A26RV502	2100-3273	1	1	RES-TRMR 2K 10%	03744	3386X-Y46-202
A26RV503	2100-0567	0	1	RES-TRMR 2K 10%	03744	3386P-Y46-202
A26RV504	2100-3210	6	1	RES-TRMR 10K 10%	03744	3386P-Y46-103
A26TP101	0360-2264	6	1	TERM.-TEST POINT	10358	1095D
A26TP102	0360-2264	6	1	TERM.-TEST POINT	10358	1095D
A26TP103	0360-2264	6	1	TERM.-TEST POINT	10358	1095D
A26TP104	0360-2264	6	1	TERM.-TEST POINT	10358	1095D
A26TP105	0360-2264	6	1	TERM.-TEST POINT	10358	1095D
A26TP106	0360-2264	6	1	TERM.-TEST POINT	10358	1095D

Table C-13. 8131A Option 020 Channel 1 Board Parts List (continued)

Reference	HP Part #	CD	Qty	Description	Manuf'r	Part #
A26TP107	0360-2264	6	1	TERM.-TEST POINT	10358	1095D
A26TP403	0360-2264	6	1	TERM.-TEST POINT	10358	1095D
A26TP404	0360-2264	6	1	TERM.-TEST POINT	10358	1095D
A26U100	1820-3665	0	1	IC-MM74HCT245N	01698	SN74HCT245N
A26U101	1820-3847	0	1	IC-MM74HCT138N	01698	SN74HCT138N
A26U102	1820-3081	4	1	IC-MC74HC74N	01698	SN74HC74N
A26U103	1820-3298	5	1	IC-MM74HC32N	02037	MC74HC32N
A26U104	1826-0861	4	1	D/A 10-BIT	03285	AD7533LN
A26U105	1826-0861	4	1	D/A 10-BIT	03285	AD7533LN
A26U106	1820-3399	7	1	IC-MC74HC273N	01698	SN74HC273N
A26U107	1826-0877	2	1	A/D 8-BIT	03285	AD7574KN
A26U108	1820-1315	3	1	ANLG MUXR MC1405	02037	MC14051BCP
A26U109	1820-0493	6	1	IC 307	03406	LM307N
A26U110	1820-3847	0	1	IC-MM74HCT138N	01698	SN74HCT138N
A26U111	1820-3082	5	1	IC-MC74HC374N	01698	SN74HC374N
A26U112	1826-0285	6	1	IC MC79L05ACP	02037	MC79L05ACP
A26U113	1826-0315	3	1	IC 348	03406	LM348N
A26U114	1826-0161	7	1	IC 324	02037	LM324N
A26U115	1820-3097	2	1	IC-MM74HC08N	02037	MC74HC08N
A26U117	1820-3373	7	1	IC-MM74HC221AN	03406	MM74HC221AN
A26U118	1820-0493	6	1	IC 307	03406	LM307N
A26U120	1820-2924	2	1	IC-MC74HC02N	01698	SN74HC02N
A26U121	1820-3081	4	1	IC-MC74HC74N	01698	SN74HC74N
A26U122	1820-3082	5	1	IC-MC74HC374N	01698	SN74HC374N
A26U123	1820-3081	4	1	IC-MC74HC74N	01698	SN74HC74N
A26U124	1820-3081	4	1	IC-MC74HC74N	01698	SN74HC74N
A26U126	1820-3081	4	1	IC-MC74HC74N	01698	SN74HC74N
A26U401	1NB7-8179	7	1	HYRIDS	28480	1NB7-8179
A26U402	1826-0524	6	1	IC 324A	03406	LM324AN
A26U403	1826-0207	2	1	IC 318	01698	LM318P

Table C-13. 8131A Option 020 Channel 1 Board Parts List (continued)

Reference	HP Part #	CD	Qty	Description	Manuf'r	Part #
A26U404	1826-0138	8	1	IC 339	01698	LM339N
A26U405	1826-1460	1	1	IC 201	03406	LM201AN
A26U406	1820-0493	6	1	IC 307	03406	LM307N
A26U407	1826-0161	7	1	IC 324	02037	LM324N
A26U408	1826-0207	2	1	IC 318	01698	LM318P
A26U409	1826-0161	7	1	IC 324	02037	LM324N
A26U410	1858-0058	8	1	XSTR ARY 14P-DIP	02037	MPQ3906
A26U411	1858-0087	3	1	XSTR ARY 14P-DIP	02037	MPQ3904
A26U412	1858-0087	3	1	XSTR ARY 14P-DIP	02037	MPQ3904
A26U413	1858-0087	3	1	XSTR ARY 14P-DIP	02037	MPQ3904
A26U415	1826-0600	9	1	IC 074A	01698	TL074ACN
A26U416	1858-0087	3	1	XSTR ARY 14P-DIP	02037	MPQ3904
A26U417	1826-0161	7	1	IC 324	02037	LM324N
A26U418	1858-0087	3	1	XSTR ARY 14P-DIP	02037	MPQ3904
A26U601	1826-0315	3	1	IC 348	03406	LM348N
A26U602	1826-0315	3	1	IC 348	03406	LM348N
A26U603	1826-0161	7	1	IC 324	02037	LM324N
A26VR101	1902-0956	0	1	DIO-ZNR 8.2V 5%	02037	
A26VR403	1902-0963	9	1	DIO-ZNR 16V 5%	02037	SZ30035-21RL
A26VR404	1902-0956	0	1	DIO-ZNR 8.2V 5%	02037	
A26VR405	1902-0956	0	1	DIO-ZNR 8.2V 5%	02037	
A26VR406	1902-0949	1	1	DIO-ZNR 4.3V 5%	02037	
A26VR407	1902-0945	7	1	DIO-ZNR 3V 5%	02037	SZ0035-3RL
A26VR409	1902-0951	5	1	DIO-ZNR 5.1V 5%	02037	SZ30035-9RL
A26VR412	1902-0950	4	1	DIO-ZNR 4.7V 5%	02037	
A26VR415	1902-0950	4	1	DIO-ZNR 4.7V 5%	02037	
A26VR417	1902-0963	9	1	DIO-ZNR 16V 5%	02037	SZ30035-21RL
A26VR419	1902-0953	7	1	DIO-ZNR 6.2V 5%	02037	SZ30035-11RL
A26VR495	1902-0951	5	1	DIO-ZNR 5.1V 5%	02037	SZ30035-9RL
A26VR602	1902-0953	7	1	DIO-ZNR 6.2V 5%	02037	SZ30035-11RL

Table C-13. 8131A Option 020 Channel 1 Board Parts List (continued)

Reference	HP Part #	CD	Qty	Description	Manuf'r	Part #
A26VR603	1902-0958	2	1	DIO-ZNR 10V 5%	02037	
A26VR604	1902-0945	7	1	DIO-ZNR 3V 5%	02037	SZ0035-3RL
A26W103	1258-0141	8	1	JUMPER-REM	01380	530153-2
A26W403	08131-61607	1	1	CBL SEMI RIGID	28480	08131-61607
A26W404	08131-61607	1	1	CBL SEMI RIGID	28480	08131-61607

Channel 2 Board Option 020

Table C-14. 8131A Option 020 Channel 2 Board Parts List

Reference	HP Part #	CD	Qty	Description	Manuf'r	Part #
A28	08131-66528	4	1	BD AY CHAN 2	28480	08131-66528
A28A418	08131-66418	0	1	BD AY TRANSDUCE	28480	08131-66418
A28C100	0160-5746	1	1	CAP 0.1uF 50 V	06121	B37987-T5104-M11
A28C101	0160-5332	1	1	CAP 0.1uF 50 V	02010	MD015C104MABH
A28C102	0160-5332	1	1	CAP 0.1uF 50 V	02010	MD015C104MABH
A28C103	0160-5730	3	1	CAP 100pF 100 V	06121	B37979-J1101-J034
A28C104	0160-5730	3	1	CAP 100pF 100 V	06121	B37979-J1101-J034
A28C105	0160-5730	3	1	CAP 100pF 100 V	06121	B37979-J1101-J034
A28C106	0160-5726	7	1	CAP 0.01uF 100 V	06121	B37987-J1103-M034
A28C107	0160-5726	7	1	CAP 0.01uF 100 V	06121	B37987-J1103-M034
A28C108	0160-5332	1	1	CAP 0.1uF 50 V	02010	MD015C104MABH
A28C109	0160-5332	1	1	CAP 0.1uF 50 V	02010	MD015C104MABH
A28C111	0160-5728	9	1	CAP 1000pF 100 V	06121	B37986-J1102-J034
A28C113	0160-5728	9	1	CAP 1000pF 100 V	06121	B37986-J1102-J034
A28C115	0160-5728	9	1	CAP 1000pF 100 V	06121	B37986-J1102-J034

Table C-14. 8131A Option 020 Channel 2 Board Parts List (continued)

Reference	HP Part #	CD	Qty	Description	Manuf'r	Part #
A28C117	0160-5728	9	1	CAP 1000pF 100 V	06121	B37986-J1102-J034
A28C119	0160-5728	9	1	CAP 1000pF 100 V	06121	B37986-J1102-J034
A28C121	0160-5728	9	1	CAP 1000pF 100 V	06121	B37986-J1102-J034
A28C125	0160-6623	5	1	CAP 0.1uF 50 V	02010	SA115C104MAAH
A28C126	0160-6500	7	1	CAP 0.01uF 100 V	02010	SA101C103KAAH
A28C127	0160-6500	7	1	CAP 0.01uF 100 V	02010	SA101C103KAAH
A28C129	0160-5728	9	1	CAP 1000pF 100 V	06121	B37986-J1102-J034
A28C130	0160-5332	1	1	CAP 0.1uF 50 V	02010	MD015C104MABH
A28C131	0160-5332	1	1	CAP 0.1uF 50 V	02010	MD015C104MABH
A28C132	0160-5332	1	1	CAP 0.1uF 50 V	02010	MD015C104MABH
A28C133	0160-5726	7	1	CAP 0.01uF 100 V	06121	B37987-J1103-M034
A28C134	0160-5726	7	1	CAP 0.01uF 100 V	06121	B37987-J1103-M034
A28C135	0160-5728	9	1	CAP 1000pF 100 V	06121	B37986-J1102-J034
A28C136	0160-5728	9	1	CAP 1000pF 100 V	06121	B37986-J1102-J034
A28C139	0160-5332	1	1	CAP 0.1uF 50 V	02010	MD015C104MABH
A28C140	0160-5332	1	1	CAP 0.1uF 50 V	02010	MD015C104MABH
A28C141	0160-6500	7	1	CAP 0.01uF 100 V	02010	SA101C103KAAH
A28C142	0160-6500	7	1	CAP 0.01uF 100 V	02010	SA101C103KAAH
A28C143	0160-5332	1	1	CAP 0.1uF 50 V	02010	MD015C104MABH
A28C401	0160-5726	7	1	CAP 0.01uF 100 V	06121	B37987-J1103-M034
A28C402	0160-5728	9	1	CAP 1000pF 100 V	06121	B37986-J1102-J034
A28C403	0160-5726	7	1	CAP 0.01uF 100 V	06121	B37987-J1103-M034
A28C404	0160-5741	6	1	CAP 47pF 100 V	06121	B37979-J1470-J034
A28C405	0160-5728	9	1	CAP 1000pF 100 V	06121	B37986-J1102-J034
A28C407	0160-5728	9	1	CAP 1000pF 100 V	06121	B37986-J1102-J034
A28C409	0160-5728	9	1	CAP 1000pF 100 V	06121	B37986-J1102-J034
A28C410	0160-5728	9	1	CAP 1000pF 100 V	06121	B37986-J1102-J034
A28C411	0160-5730	3	1	CAP 100pF 100 V	06121	B37979-J1101-J034
A28C412	0160-5730	3	1	CAP 100pF 100 V	06121	B37979-J1101-J034
A28C413	0160-5730	3	1	CAP 100pF 100 V	06121	B37979-J1101-J034

Table C-14. 8131A Option 020 Channel 2 Board Parts List (continued)

Reference	HP Part #	CD	Qty	Description	Manuf'r	Part #
A28C414	0160-5730	3	1	CAP 100pF 100 V	06121	B37979-J1101-J034
A28C415	0160-5726	7	1	CAP 0.01uF 100 V	06121	B37987-J1103-M034
A28C416	0160-6500	7	1	CAP 0.01uF 100 V	02010	SA101C103KAAH
A28C417	0160-6500	7	1	CAP 0.01uF 100 V	02010	SA101C103KAAH
A28C418	0160-5726	7	1	CAP 0.01uF 100 V	06121	B37987-J1103-M034
A28C419	0160-6500	7	1	CAP 0.01uF 100 V	02010	SA101C103KAAH
A28C420	0160-5726	7	1	CAP 0.01uF 100 V	06121	B37987-J1103-M034
A28C421	0160-5741	6	1	CAP 47pF 100 V	06121	B37979-J1470-J034
A28C422	0160-5728	9	1	CAP 1000pF 100 V	06121	B37986-J1102-J034
A28C425	0160-5726	7	1	CAP 0.01uF 100 V	06121	B37987-J1103-M034
A28C426	0160-6500	7	1	CAP 0.01uF 100 V	02010	SA101C103KAAH
A28C427	0160-5746	1	1	CAP 0.1uF 50 V	06121	B37987-T5104-M11
A28C429	0160-5726	7	1	CAP 0.01uF 100 V	06121	B37987-J1103-M034
A28C430	0160-5726	7	1	CAP 0.01uF 100 V	06121	B37987-J1103-M034
A28C431	0160-6500	7	1	CAP 0.01uF 100 V	02010	SA101C103KAAH
A28C432	0160-6500	7	1	CAP 0.01uF 100 V	02010	SA101C103KAAH
A28C433	0160-6500	7	1	CAP 0.01uF 100 V	02010	SA101C103KAAH
A28C434	0160-5740	5	1	CAP 33pF 100 V	06121	B37979-J1330-J034
A28C435	0160-6500	7	1	CAP 0.01uF 100 V	02010	SA101C103KAAH
A28C436	0160-6500	7	1	CAP 0.01uF 100 V	02010	SA101C103KAAH
A28C437	0160-6500	7	1	CAP 0.01uF 100 V	02010	SA101C103KAAH
A28C439	0160-3873	1	1	CAP 4.7pF 200 V	06352	FD12C0G2D4R7D
A28C440	0160-5747	2	1	CAP 0.047uF 50 V	06121	B37987-J5473-M034
A28C441	0160-5747	2	1	CAP 0.047uF 50 V	06121	B37987-J5473-M034
A28C450	0160-3873	1	1	CAP 4.7pF 200 V	06352	FD12C0G2D4R7D
A28C451	0160-6500	7	1	CAP 0.01uF 100 V	02010	SA101C103KAAH
A28C452	0160-6500	7	1	CAP 0.01uF 100 V	02010	SA101C103KAAH
A28C453	0160-6500	7	1	CAP 0.01uF 100 V	02010	SA101C103KAAH
A28C460	0160-5737	0	1	CAP 68pF 100 V	06121	B37979-J1680-J034
A28C461	0160-5737	0	1	CAP 68pF 100 V	06121	B37979-J1680-J034

Table C-14. 8131A Option 020 Channel 2 Board Parts List (continued)

Reference	HP Part #	CD	Qty	Description	Manuf'r	Part #
A28C470	0160-5726	7	1	CAP 0.01uF 100 V	06121	B37987-J1103-M034
A28C471	0160-5728	9	1	CAP 1000pF 100 V	06121	B37986-J1102-J034
A28C472	0160-5746	1	1	CAP 0.1uF 50 V	06121	B37987-T5104-M11
A28C473	0160-5726	7	1	CAP 0.01uF 100 V	06121	B37987-J1103-M034
A28C474	0160-5728	9	1	CAP 1000pF 100 V	06121	B37986-J1102-J034
A28C475	0160-6500	7	1	CAP 0.01uF 100 V	02010	SA101C103KAAH
A28C476	0160-6623	5	1	CAP 0.1uF 50 V	02010	SA115C104MAAH
A28C477	0160-5728	9	1	CAP 1000pF 100 V	06121	B37986-J1102-J034
A28C478	0160-5726	7	1	CAP 0.01uF 100 V	06121	B37987-J1103-M034
A28C479	0160-6623	5	1	CAP 0.1uF 50 V	02010	SA115C104MAAH
A28C480	0160-5728	9	1	CAP 1000pF 100 V	06121	B37986-J1102-J034
A28C481	0160-5728	9	1	CAP 1000pF 100 V	06121	B37986-J1102-J034
A28C482	0160-5728	9	1	CAP 1000pF 100 V	06121	B37986-J1102-J034
A28C483	0160-6500	7	1	CAP 0.01uF 100 V	02010	SA101C103KAAH
A28C484	0160-5746	1	1	CAP 0.1uF 50 V	06121	B37987-T5104-M11
A28C485	0160-5746	1	1	CAP 0.1uF 50 V	06121	B37987-T5104-M11
A28C486	0160-5746	1	1	CAP 0.1uF 50 V	06121	B37987-T5104-M11
A28C601	0160-6500	7	1	CAP 0.01uF 100 V	02010	SA101C103KAAH
A28C604	0160-5726	7	1	CAP 0.01uF 100 V	06121	B37987-J1103-M034
A28C605	0160-5726	7	1	CAP 0.01uF 100 V	06121	B37987-J1103-M034
A28C606	0160-6500	7	1	CAP 0.01uF 100 V	02010	SA101C103KAAH
A28C607	0160-5726	7	1	CAP 0.01uF 100 V	06121	B37987-J1103-M034
A28C608	0160-5746	1	1	CAP 0.1uF 50 V	06121	B37987-T5104-M11
A28C609	0160-5726	7	1	CAP 0.01uF 100 V	06121	B37987-J1103-M034
A28C610	0160-5746	1	1	CAP 0.1uF 50 V	06121	B37987-T5104-M11
A28C611	0160-5726	7	1	CAP 0.01uF 100 V	06121	B37987-J1103-M034
A28C613	0160-5726	7	1	CAP 0.01uF 100 V	06121	B37987-J1103-M034
A28C614	0160-5746	1	1	CAP 0.1uF 50 V	06121	B37987-T5104-M11
A28C615	0160-6500	7	1	CAP 0.01uF 100 V	02010	SA101C103KAAH
A28C616	0160-6500	7	1	CAP 0.01uF 100 V	02010	SA101C103KAAH

Table C-14. 8131A Option 020 Channel 2 Board Parts List (continued)

Reference	HP Part #	CD	Qty	Description	Manuf'r	Part #
A28C617	0160-6500	7	1	CAP 0.01uF 100 V	02010	SA101C103KAAH
A28C618	0160-5746	1	1	CAP 0.1uF 50 V	06121	B37987-T5104-M11
A28CP110	0180-0116	1	1	CAP 6.8uF 35 V	04200	150D685X9035B2-DYS
A28CP112	0180-0374	3	1	CAP 10uF 20 V	04200	150D106X9020B2-DYS
A28CP114	0180-0374	3	1	CAP 10uF 20 V	04200	150D106X9020B2-DYS
A28CP116	0180-0116	1	1	CAP 6.8uF 35 V	04200	150D685X9035B2-DYS
A28CP118	0180-0116	1	1	CAP 6.8uF 35 V	04200	150D685X9035B2-DYS
A28CP120	0180-0374	3	1	CAP 10uF 20 V	04200	150D106X9020B2-DYS
A28CP122	0180-2205	3	1	CAP 0.33uF 35 V	04200	150D334X9035A2-DYS
A28CP123	0180-4129	4	1	CAP 1uF 35 V	04200	173D105X9035V
A28CP128	0180-4129	4	1	CAP 1uF 35 V	04200	173D105X9035V
A28CP438	0180-4129	4	1	CAP 1uF 35 V	04200	173D105X9035V
A28CP439	0180-4129	4	1	CAP 1uF 35 V	04200	173D105X9035V
A28CR100	1901-0535	9	1	DIO- SCHOTTKY SM	02062	50825511
A28CR108	1901-0535	9	1	DIO- SCHOTTKY SM	02062	50825511
A28CR109	1901-0535	9	1	DIO- SCHOTTKY SM	02062	50825511
A28CR111	1901-0535	9	1	DIO- SCHOTTKY SM	02062	50825511
A28CR112	1901-0535	9	1	DIO- SCHOTTKY SM	02062	50825511
A28CR122	1901-0033	2	1	DIO-GEN PRP	03406	
A28CR123	1901-0535	9	1	DIO- SCHOTTKY SM	02062	50825511
A28CR124	1901-0535	9	1	DIO- SCHOTTKY SM	02062	50825511
A28CR125	1901-0535	9	1	DIO- SCHOTTKY SM	02062	50825511
A28CR126	1901-0535	9	1	DIO- SCHOTTKY SM	02062	50825511
A28CR414	1901-0033	2	1	DIO-GEN PRP	03406	
A28CR415	1901-0732	8	1	DIO-PWR RECT	02037	SR3010-4RL
A28CR416	1901-0732	8	1	DIO-PWR RECT	02037	SR3010-4RL
A28CR417	1901-1098	1	1	DIO-1N4150	00746	
A28CR418	1901-1098	1	1	DIO-1N4150	00746	
A28CR419	1901-1098	1	1	DIO-1N4150	00746	
A28CR420	1901-1098	1	1	DIO-1N4150	00746	

Table C-14. 8131A Option 020 Channel 2 Board Parts List (continued)

Reference	HP Part #	CD	Qty	Description	Manuf'r	Part #
A28CR601	1901-0535	9	1	DIO- SCHOTTKY SM	02062	50825511
A28CR602	1901-1098	1	1	DIO-1N4150	00746	
A28J1	1251-8324	1	1	CONN-POST-TP-HDR	04486	G06M96P4BEBL-004-715
A28J101	1251-1556	7	4	CONN-SGL CONT	01075	006-4844-00-0-990
A28J102	1251-1556	7	4	CONN-SGL CONT	01075	006-4844-00-0-990
A28J103	1251-4682	6	1	CONN-POST-TP-HDR	03394	1102-1-103-02
A28J403	1252-2649	3	1	CONN ELAST 43LG	09922	NE 0.2P 43.0L 3.0H 3.6W
A28J404	1252-2649	3	1	CONN ELAST 43LG	09922	NE 0.2P 43.0L 3.0H 3.6W
A28J405	1252-2650	6	1	CONN ELAST 30LG	09922	NE 0.2P 30.0L 3.0H 3.6W
A28J406	1252-2651	7	1	CONN ELAST 5LG	09922	NE 0.2P 5.0L 3.0H 3.6W
A28J407	1252-2651	7	1	CONN ELAST 5LG	09922	NE 0.2P 5.0L 3.0H 3.6W
A28J408	1252-2651	7	1	CONN ELAST 5LG	09922	NE 0.2P 5.0L 3.0H 3.6W
A28J423	1252-2648	2	1	CONN ELAST 30LG	09922	NE 0.4P 30.0L 3.5H 4.2W
A28J424	1252-2648	2	1	CONN ELAST 30LG	09922	NE 0.4P 30.0L 3.5H 4.2W
A28J425	1252-2647	1	1	CONN ELAST 0.4P	09922	NE 0.4P 43.0L 3.5H 4.2W
A28J426	1252-2647	1	1	CONN ELAST 0.4P	09922	NE 0.4P 43.0L 3.5H 4.2W
A28K403	0955-0452	1	1	SW-COAX SMA	02574	S-4845
A28K404	0955-0452	1	1	SW-COAX SMA	02574	S-4845
A28L100	9100-1788	6	1	CORE-FERRITE	02995	VK200 20/4B
A28L101	9100-1788	6	1	CORE-FERRITE	02995	VK200 20/4B
A28L102	9100-1788	6	1	CORE-FERRITE	02995	VK200 20/4B
A28L103	9100-1788	6	1	CORE-FERRITE	02995	VK200 20/4B
A28L104	9100-1788	6	1	CORE-FERRITE	02995	VK200 20/4B
A28L105	9100-1788	6	1	CORE-FERRITE	02995	VK200 20/4B
A28L401	9100-2257	6	1	L 820NH +-10%	03273	10M820K
A28L402	9100-2256	5	1	L 560NH +-10%	03273	10M560K
A28L403	9100-2257	6	1	L 820NH +-10%	03273	10M820K
A28L404	9100-2256	5	1	L 560NH +-10%	03273	10M560K
A28MP1	08131-00601	7	1	SHIELD	28480	08131-00601
A28MP2	0403-0285	9	2	BMPR FT-ADH MTG	04726	SJ-5018 GRAY
A28MP16	3050-0152	3	3	WSHR-SHLDR	04604	1462

Table C-14. 8131A Option 020 Channel 2 Board Parts List (continued)

Reference	HP Part #	CD	Qty	Description	Manuf'r	Part #
A28MP20	0515-0659	8	4	SCR-MACHINE	05610	
A28MP21	3050-0960	1	2	WASHER-SHLDR 3.0	05947	V5359
A28MP22	3050-0098	6	2	WSHR-FL MTLC	04939	AN960 C2
A28MP141	0340-1212	0	1	INSULATOR	28480	0340-1212
A28MP142	08131-21101	6	1	HEATSINK TUB	28480	08131-21101
A28MP143	08131-40503	2	1	FRAME PLASTIC	28480	08131-40503
A28MP144	08131-04104	3	1	COVER	28480	08131-04104
A28MP145	08131-05401	5	1	DUST HYBRD COVE	28480	08131-05401
A28MP403	1205-0295	2	1	HEAT SINK	02608	6107B-14
A28MP404	1205-0295	2	1	HEAT SINK	02608	6107B-14
A28MP405	1205-0295	2	1	HEAT SINK	02608	6107B-14
A28MP413	0340-1074	2	1	INSUL-XSTR	05447	3223-07FR-58-AC
A28MP414	0340-1074	2	1	INSUL-XSTR	05447	3223-07FR-58-AC
A28MP415	0340-1074	2	1	INSUL-XSTR	05447	3223-07FR-58-AC
A28MP603	1205-0295	2	1	HEAT SINK	02608	6107B-14
A28MP609	1205-0011	0	1	HEAT SINK	02608	2226B
A28MP613	0340-1074	2	1	INSUL-XSTR	05447	3223-07FR-58-AC
A28MP618	0340-1074	2	1	INSUL-XSTR	05447	3223-07FR-58-AC
A28Q100	1854-1028	6	1	XSTR NPN SI	02037	2N3904
A28Q101	1853-0314	9	1	XSTR PNP 2N2905A	02037	2N2905A
A28Q102	1854-0637	1	1	XSTR NPN 2N2219A	02037	2N2219A
A28Q401	1854-0583	6	1	XSTR NPN SI	02037	MPS-A18
A28Q403	1854-0828	2	1	XSTR NPN SI	00039	NTD560
A28Q404	1853-0468	4	1	XSTR PNP SI DARL	02037	TIP-127
A28Q405	1855-0548	5	1	MOSFET N-CHAN	02037	BUZ71A
A28Q406	1855-0751	2	1	MOSFET N-CHAN	02883	VN0808M
A28Q411	1854-0583	6	1	XSTR NPN SI	02037	MPS-A18
A28Q412	1855-0751	2	1	MOSFET N-CHAN	02883	VN0808M
A28Q413	1855-0751	2	1	MOSFET N-CHAN	02883	VN0808M
A28Q415	1855-0689	5	1	J-FET CHIP P-CHA	02037	2N5461

Table C-14. 8131A Option 020 Channel 2 Board Parts List (continued)

Reference	HP Part #	CD	Qty	Description	Manuf'r	Part #
A28Q416	1853-0563	0	1	XSTR PNP SI	02037	2N3906(SEL)
A28Q430	1853-0563	0	1	XSTR PNP SI	02037	2N3906(SEL)
A28Q431	1853-0563	0	1	XSTR PNP SI	02037	2N3906(SEL)
A28Q603	1855-0548	5	1	MOSFET N-CHAN	02037	BUZ71A
A28Q605	1854-1028	6	1	XSTR NPN SI	02037	2N3904
A28Q606	1855-0751	2	1	MOSFET N-CHAN	02883	VN0808M
A28Q608	1853-0509	4	1	XSTR PNP	01698	TIP42A
A28Q609	1853-0314	9	1	XSTR PNP 2N2905A	02037	2N2905A
A28R100	0757-0442	9	1	RES 10K 1% .125W	00746	CRB14 OR CRB25
A28R101	0757-0465	6	1	RES 100K 1% .125	00746	CRB14 OR CRB25
A28R102	0698-8827	4	1	RES 1M 1% .125W	00746	CRB14 OR CRB25
A28R105	0698-3452	1	1	RES 147K 1% .125	00746	CRB14 OR CRB25
A28R106	0698-3132	4	1	RES 261 1% .125W	00746	CRB14 OR CRB25
A28R107	0698-3439	4	1	RES 178 1% .125W	00746	CRB14 OR CRB25
A28R108	0698-6360	6	1	RES 10K .1% .125	00746	CRB14 OR CRB25
A28R109	0698-6360	6	1	RES 10K .1% .125	00746	CRB14 OR CRB25
A28R110	0698-6630	3	1	RES 20K .1% .125	00746	CRB14 OR CRB25
A28R111	0698-6360	6	1	RES 10K .1% .125	00746	CRB14 OR CRB25
A28R112	0757-0442	9	1	RES 10K 1% .125W	00746	CRB14 OR CRB25
A28R113	0698-3279	0	1	RES 4.99K 1% .12	00746	CRB14 OR CRB25
A28R114	0757-0439	4	1	RES 6.81K 1% .12	00746	CRB14 OR CRB25
A28R115	0757-0280	3	1	RES 1K 1% .125W	00746	CRB14 OR CRB25
A28R116	0757-0280	3	1	RES 1K 1% .125W	00746	CRB14 OR CRB25
A28R117	0757-0280	3	1	RES 1K 1% .125W	00746	CRB14 OR CRB25
A28R118	0757-0280	3	1	RES 1K 1% .125W	00746	CRB14 OR CRB25
A28R119	0757-0442	9	1	RES 10K 1% .125W	00746	CRB14 OR CRB25
A28R120	0757-0274	5	1	RES 1.21K 1% .12	00746	CRB14 OR CRB25
A28R121	0757-0438	3	1	RES 5.11K 1% .12	00746	CRB14 OR CRB25
A28R130	0757-0278	9	1	RES 1.78K 1% .12	00746	CRB14 OR CRB25
A28R131	0698-3153	9	1	RES 3.83K 1% .12	00746	CRB14 OR CRB25

Table C-14. 8131A Option 020 Channel 2 Board Parts List (continued)

Reference	HP Part #	CD	Qty	Description	Manuf'r	Part #
A28R132	0757-0439	4	1	RES 6.81K 1% .12	00746	CRB14 OR CRB25
A28R135	0757-0439	4	1	RES 6.81K 1% .12	00746	CRB14 OR CRB25
A28R136	0698-3153	9	1	RES 3.83K 1% .12	00746	CRB14 OR CRB25
A28R137	0757-0278	9	1	RES 1.78K 1% .12	00746	CRB14 OR CRB25
A28R140	0698-6360	6	1	RES 10K .1% .125	00746	CRB14 OR CRB25
A28R141	0698-6360	6	1	RES 10K .1% .125	00746	CRB14 OR CRB25
A28R142	0698-3279	0	1	RES 4.99K 1% .12	00746	CRB14 OR CRB25
A28R144	0698-3161	9	1	RES 38.3K 1% .12	00746	CRB14 OR CRB25
A28R145	0757-0199	3	1	RES 21.5K 1% .12	00746	CRB14 OR CRB25
A28R146	0757-0416	7	1	RES 511 1% .125W	00746	CRB14 OR CRB25
A28R147	0698-3136	8	1	RES 17.8K 1% .12	00746	CRB14 OR CRB25
A28R148	0757-0442	9	1	RES 10K 1% .125W	00746	CRB14 OR CRB25
A28R149	0757-0416	7	1	RES 511 1% .125W	00746	CRB14 OR CRB25
A28R150	0757-0416	7	1	RES 511 1% .125W	00746	CRB14 OR CRB25
A28R157	0757-0442	9	1	RES 10K 1% .125W	00746	CRB14 OR CRB25
A28R200	1250-2206	4	1	TERM 50 OHM	28480	1250-2206
A28R300	1250-2206	4	1	TERM 50 OHM	28480	1250-2206
A28R400	8159-0005	0	1	RES-ZERO OHMS	01339	L-2007-1
A28R401	0698-3242	7	1	RES 357 1% .125W	00746	CRB14 OR CRB25
A28R402	0757-0280	3	1	RES 1K 1% .125W	00746	CRB14 OR CRB25
A28R403	0698-3558	8	1	RES 4.02K 1% .12	00746	CRB14 OR CRB25
A28R404	8159-0005	0	1	RES-ZERO OHMS	01339	L-2007-1
A28R405	0757-0416	7	1	RES 511 1% .125W	00746	CRB14 OR CRB25
A28R406	0757-0442	9	1	RES 10K 1% .125W	00746	CRB14 OR CRB25
A28R407	0757-0449	6	1	RES 20K 1% .125W	00746	CRB14 OR CRB25
A28R408	0757-0416	7	1	RES 511 1% .125W	00746	CRB14 OR CRB25
A28R410	0698-0084	9	1	RES 2.15K 1% .12	00746	CRB14 OR CRB25
A28R411	0757-0449	6	1	RES 20K 1% .125W	00746	CRB14 OR CRB25
A28R412	0757-0442	9	1	RES 10K 1% .125W	00746	CRB14 OR CRB25
A28R413	0757-0442	9	1	RES 10K 1% .125W	00746	CRB14 OR CRB25

Table C-14. 8131A Option 020 Channel 2 Board Parts List (continued)

Reference	HP Part #	CD	Qty	Description	Manuf'r	Part #
A28R414	0757-0279	0	1	RES 3.16K 1% .12	00746	CRB14 OR CRB25
A28R415	0757-0280	3	1	RES 1K 1% .125W	00746	CRB14 OR CRB25
A28R416	0757-0280	3	1	RES 1K 1% .125W	00746	CRB14 OR CRB25
A28R417	0757-0280	3	1	RES 1K 1% .125W	00746	CRB14 OR CRB25
A28R418	0757-0280	3	1	RES 1K 1% .125W	00746	CRB14 OR CRB25
A28R419	0757-0438	3	1	RES 5.11K 1% .12	00746	CRB14 OR CRB25
A28R420	0757-0442	9	1	RES 10K 1% .125W	00746	CRB14 OR CRB25
A28R421	0757-0442	9	1	RES 10K 1% .125W	00746	CRB14 OR CRB25
A28R422	0757-0416	7	1	RES 511 1% .125W	00746	CRB14 OR CRB25
A28R423	0757-0442	9	1	RES 10K 1% .125W	00746	CRB14 OR CRB25
A28R424	0698-4477	2	1	RES 10.5K 1% .12	00746	CRB14 OR CRB25
A28R425	0698-4445	4	1	RES 5.76K 1% .12	00746	CRB14 OR CRB25
A28R426	0698-3153	9	1	RES 3.83K 1% .12	00746	CRB14 OR CRB25
A28R427	0757-0442	9	1	RES 10K 1% .125W	00746	CRB14 OR CRB25
A28R428	0698-3430	5	1	RES 21.5 1% .125	00746	CRB14 OR CRB25
A28R429	0757-0284	7	1	RES 150 1% .125W	00746	CRB14 OR CRB25
A28R430	0757-0442	9	1	RES 10K 1% .125W	00746	CRB14 OR CRB25
A28R431	0757-0442	9	1	RES 10K 1% .125W	00746	CRB14 OR CRB25
A28R432	0698-3446	3	1	RES 383 1% .125W	00746	CRB14 OR CRB25
A28R434	0757-0999	1	1	RES 47.5 1% .5W	01074	H2
A28R435	0757-0401	0	1	RES 100 1% .125W	00746	CRB14 OR CRB25
A28R436	0698-0085	0	1	RES 2.61K 1% .12	00746	CRB14 OR CRB25
A28R437	0757-0442	9	1	RES 10K 1% .125W	00746	CRB14 OR CRB25
A28R438	0757-0401	0	1	RES 100 1% .125W	00746	CRB14 OR CRB25
A28R439	0757-0442	9	1	RES 10K 1% .125W	00746	CRB14 OR CRB25
A28R440	0757-0444	1	1	RES 12.1K 1% .12	00746	CRB14 OR CRB25
A28R441	0757-0280	3	1	RES 1K 1% .125W	00746	CRB14 OR CRB25
A28R442	0757-0442	9	1	RES 10K 1% .125W	00746	CRB14 OR CRB25
A28R443	0757-0442	9	1	RES 10K 1% .125W	00746	CRB14 OR CRB25
A28R444	0757-0421	4	1	RES 825 1% .125W	00746	CRB14 OR CRB25

Table C-14. 8131A Option 020 Channel 2 Board Parts List (continued)

Reference	HP Part #	CD	Qty	Description	Manuf'r	Part #
A28R445	0698-3152	8	1	RES 3.48K 1% .12	00746	CRB14 OR CRB25
A28R446	0757-0290	5	1	RES 6.19K 1% .12	00746	CRB14 OR CRB25
A28R447	0757-0444	1	1	RES 12.1K 1% .12	00746	CRB14 OR CRB25
A28R448	0698-3156	2	1	RES 14.7K 1% .12	00746	CRB14 OR CRB25
A28R449	0757-0442	9	1	RES 10K 1% .125W	00746	CRB14 OR CRB25
A28R450	0757-0440	7	1	RES 7.5K 1% .125	00746	CRB14 OR CRB25
A28R451	0698-4469	2	1	RES 1.15K 1% .12	00746	CRB14 OR CRB25
A28R452	0757-0428	1	1	RES 1.62K 1% .12	00746	CRB14 OR CRB25
A28R453	0757-0290	5	1	RES 6.19K 1% .12	00746	CRB14 OR CRB25
A28R454	0757-0442	9	1	RES 10K 1% .125W	00746	CRB14 OR CRB25
A28R456	0698-3444	1	1	RES 316 1% .125W	00746	CRB14 OR CRB25
A28R457	0757-0442	9	1	RES 10K 1% .125W	00746	CRB14 OR CRB25
A28R458	0757-0442	9	1	RES 10K 1% .125W	00746	CRB14 OR CRB25
A28R459	0757-0442	9	1	RES 10K 1% .125W	00746	CRB14 OR CRB25
A28R460	0757-0442	9	1	RES 10K 1% .125W	00746	CRB14 OR CRB25
A28R464	0757-0439	4	1	RES 6.81K 1% .12	00746	CRB14 OR CRB25
A28R465	0698-0085	0	1	RES 2.61K 1% .12	00746	CRB14 OR CRB25
A28R466	0698-0085	0	1	RES 2.61K 1% .12	00746	CRB14 OR CRB25
A28R467	0757-0442	9	1	RES 10K 1% .125W	00746	CRB14 OR CRB25
A28R468	0757-0442	9	1	RES 10K 1% .125W	00746	CRB14 OR CRB25
A28R469	0757-0416	7	1	RES 511 1% .125W	00746	CRB14 OR CRB25
A28R470	0698-4448	7	1	RES 294 1% .125W	00746	CRB14 OR CRB25
A28R471	0698-3438	3	1	RES 147 1% .125W	00746	CRB14 OR CRB25
A28R472	0698-4037	0	1	RES 46.4 1% .125	00746	CRB14 OR CRB25
A28R473	0757-0442	9	1	RES 10K 1% .125W	00746	CRB14 OR CRB25
A28R474	0757-0442	9	1	RES 10K 1% .125W	00746	CRB14 OR CRB25
A28R475	0757-1094	9	1	RES 1.47K 1% .12	00746	CRB14 OR CRB25
A28R476	0698-3439	4	1	RES 178 1% .125W	00746	CRB14 OR CRB25
A28R477	0698-3444	1	1	RES 316 1% .125W	00746	CRB14 OR CRB25
A28R478	0698-3444	1	1	RES 316 1% .125W	00746	CRB14 OR CRB25

Table C-14. 8131A Option 020 Channel 2 Board Parts List (continued)

Reference	HP Part #	CD	Qty	Description	Manuf'r	Part #
A28R479	0757-0442	9	1	RES 10K 1% .125W	00746	CRB14 OR CRB25
A28R480	0757-0442	9	1	RES 10K 1% .125W	00746	CRB14 OR CRB25
A28R484	0757-0439	4	1	RES 6.81K 1% .12	00746	CRB14 OR CRB25
A28R486	0757-0442	9	1	RES 10K 1% .125W	00746	CRB14 OR CRB25
A28R487	0757-0442	9	1	RES 10K 1% .125W	00746	CRB14 OR CRB25
A28R488	0757-0280	3	1	RES 1K 1% .125W	00746	CRB14 OR CRB25
A28R489	0757-0280	3	1	RES 1K 1% .125W	00746	CRB14 OR CRB25
A28R490	0757-0442	9	1	RES 10K 1% .125W	00746	CRB14 OR CRB25
A28R491	0757-0442	9	1	RES 10K 1% .125W	00746	CRB14 OR CRB25
A28R492	0757-0466	7	1	RES 110K 1% .125	00746	CRB14 OR CRB25
A28R493	0698-3515	7	1	RES 5.9K 1% .125	00746	CRB14 OR CRB25
A28R494	0757-0416	7	1	RES 511 1% .125W	00746	CRB14 OR CRB25
A28R498	0757-0442	9	1	RES 10K 1% .125W	00746	CRB14 OR CRB25
A28R499	0757-0442	9	1	RES 10K 1% .125W	00746	CRB14 OR CRB25
A28R500	0757-0442	9	1	RES 10K 1% .125W	00746	CRB14 OR CRB25
A28R501	0757-0441	8	1	RES 8.25K 1% .12	00746	CRB14 OR CRB25
A28R504	8159-0005	0	1	RES-ZERO OHMS	01339	L-2007-1
A28R508	0757-0442	9	1	RES 10K 1% .125W	00746	CRB14 OR CRB25
A28R509	0757-0441	8	1	RES 8.25K 1% .12	00746	CRB14 OR CRB25
A28R510	0757-0438	3	1	RES 5.11K 1% .12	00746	CRB14 OR CRB25
A28R511	0683-2265	1	1	RES 22M 5% .25W	01607	CB2265
A28R512	0698-8958	2	1	RES 511K 1% .125	00746	CRB14 OR CRB25
A28R513	0683-2265	1	1	RES 22M 5% .25W	01607	CB2265
A28R514	0698-8958	2	1	RES 511K 1% .125	00746	CRB14 OR CRB25
A28R519	0757-0280	3	1	RES 1K 1% .125W	00746	CRB14 OR CRB25
A28R520	0757-0442	9	1	RES 10K 1% .125W	00746	CRB14 OR CRB25
A28R521	8159-0005	0	1	RES-ZERO OHMS	01339	L-2007-1
A28R523	0698-3242	7	1	RES 357 1% .125W	00746	CRB14 OR CRB25
A28R524	0757-0416	7	1	RES 511 1% .125W	00746	CRB14 OR CRB25
A28R525	0757-0283	6	1	RES 2K 1% .125W	00746	CRB14 OR CRB25

Table C-14. 8131A Option 020 Channel 2 Board Parts List (continued)

Reference	HP Part #	CD	Qty	Description	Manuf'r	Part #
A28R526	0698-3488	3	1	RES 442 1% .125W	00746	CRB14 OR CRB25
A28R527	0698-3488	3	1	RES 442 1% .125W	00746	CRB14 OR CRB25
A28R530	0698-3558	8	1	RES 4.02K 1% .12	00746	CRB14 OR CRB25
A28R531	0757-0283	6	1	RES 2K 1% .125W	00746	CRB14 OR CRB25
A28R532	0698-0085	0	1	RES 2.61K 1% .12	00746	CRB14 OR CRB25
A28R540	0757-0407	6	1	RES 200 1% .125W	00746	CRB14 OR CRB25
A28R541	0757-0407	6	1	RES 200 1% .125W	00746	CRB14 OR CRB25
A28R550	0757-0416	7	1	RES 511 1% .125W	00746	CRB14 OR CRB25
A28R551	0757-0442	9	1	RES 10K 1% .125W	00746	CRB14 OR CRB25
A28R552	0757-0442	9	1	RES 10K 1% .125W	00746	CRB14 OR CRB25
A28R553	0757-0442	9	1	RES 10K 1% .125W	00746	CRB14 OR CRB25
A28R554	0757-0442	9	1	RES 10K 1% .125W	00746	CRB14 OR CRB25
A28R560	0757-0439	4	1	RES 6.81K 1% .12	00746	CRB14 OR CRB25
A28R561	0757-0442	9	1	RES 10K 1% .125W	00746	CRB14 OR CRB25
A28R562	0757-0442	9	1	RES 10K 1% .125W	00746	CRB14 OR CRB25
A28R563	0757-0439	4	1	RES 6.81K 1% .12	00746	CRB14 OR CRB25
A28R564	0757-0442	9	1	RES 10K 1% .125W	00746	CRB14 OR CRB25
A28R565	0757-0442	9	1	RES 10K 1% .125W	00746	CRB14 OR CRB25
A28R566	0757-0439	4	1	RES 6.81K 1% .12	00746	CRB14 OR CRB25
A28R567	0757-0280	3	1	RES 1K 1% .125W	00746	CRB14 OR CRB25
A28R568	0757-0280	3	1	RES 1K 1% .125W	00746	CRB14 OR CRB25
A28R569	0757-0444	1	1	RES 12.1K 1% .12	00746	CRB14 OR CRB25
A28R570	0698-4123	5	1	RES 499 1% .125W	00746	CRB14 OR CRB25
A28R571	0698-3159	5	1	RES 26.1K 1% .12	00746	CRB14 OR CRB25
A28R572	0698-3159	5	1	RES 26.1K 1% .12	00746	CRB14 OR CRB25
A28R573	0698-4123	5	1	RES 499 1% .125W	00746	CRB14 OR CRB25
A28R574	0698-4123	5	1	RES 499 1% .125W	00746	CRB14 OR CRB25
A28R575	0757-0280	3	1	RES 1K 1% .125W	00746	CRB14 OR CRB25
A28R576	0757-0123	3	1	RES 34.8K 1% .12	00746	CRB14 OR CRB25
A28R577	0757-0123	3	1	RES 34.8K 1% .12	00746	CRB14 OR CRB25

Table C-14. 8131A Option 020 Channel 2 Board Parts List (continued)

Reference	HP Part #	CD	Qty	Description	Manuf'r	Part #
A28R588	0757-0997	9	1	RES 39.2 1% .5W	01074	H2
A28R604	0757-0442	9	1	RES 10K 1% .125W	00746	CRB14 OR CRB25
A28R607	0757-0442	9	1	RES 10K 1% .125W	00746	CRB14 OR CRB25
A28R608	0757-0449	6	1	RES 20K 1% .125W	00746	CRB14 OR CRB25
A28R609	0757-0442	9	1	RES 10K 1% .125W	00746	CRB14 OR CRB25
A28R610	0757-0442	9	1	RES 10K 1% .125W	00746	CRB14 OR CRB25
A28R612	0757-0199	3	1	RES 21.5K 1% .12	00746	CRB14 OR CRB25
A28R613	0698-4425	0	1	RES 1.54K 1% .12	00746	CRB14 OR CRB25
A28R614	0698-6630	3	1	RES 20K .1% .125	00746	CRB14 OR CRB25
A28R615	0698-6624	5	1	RES 2K .1% .125W	00746	CRB14 OR CRB25
A28R617	0698-4437	4	1	RES 2.94K 1% .12	00746	CRB14 OR CRB25
A28R618	0757-0200	7	1	RES 5.62K 1% .12	00746	CRB14 OR CRB25
A28R621	0757-0444	1	1	RES 12.1K 1% .12	00746	CRB14 OR CRB25
A28R622	0757-0283	6	1	RES 2K 1% .125W	00746	CRB14 OR CRB25
A28R624	0757-0442	9	1	RES 10K 1% .125W	00746	CRB14 OR CRB25
A28R625	0757-0280	3	1	RES 1K 1% .125W	00746	CRB14 OR CRB25
A28R626	0757-0442	9	1	RES 10K 1% .125W	00746	CRB14 OR CRB25
A28R628	0757-0441	8	1	RES 8.25K 1% .12	00746	CRB14 OR CRB25
A28R629	0757-0442	9	1	RES 10K 1% .125W	00746	CRB14 OR CRB25
A28R630	0757-0442	9	1	RES 10K 1% .125W	00746	CRB14 OR CRB25
A28R631	0757-0442	9	1	RES 10K 1% .125W	00746	CRB14 OR CRB25
A28R632	0757-0441	8	1	RES 8.25K 1% .12	00746	CRB14 OR CRB25
A28R633	0757-0442	9	1	RES 10K 1% .125W	00746	CRB14 OR CRB25
A28R635	0698-3444	1	1	RES 316 1% .125W	00746	CRB14 OR CRB25
A28R636	0757-0442	9	1	RES 10K 1% .125W	00746	CRB14 OR CRB25
A28R639	0757-0441	8	1	RES 8.25K 1% .12	00746	CRB14 OR CRB25
A28R640	0757-0442	9	1	RES 10K 1% .125W	00746	CRB14 OR CRB25
A28R641	0698-3444	1	1	RES 316 1% .125W	00746	CRB14 OR CRB25
A28R642	0757-0442	9	1	RES 10K 1% .125W	00746	CRB14 OR CRB25
A28R643	0757-0283	6	1	RES 2K 1% .125W	00746	CRB14 OR CRB25

Table C-14. 8131A Option 020 Channel 2 Board Parts List (continued)

Reference	HP Part #	CD	Qty	Description	Manuf'r	Part #
A28R644	0757-0317	7	1	RES 1.33K 1% .12	00746	CRB14 OR CRB25
A28R645	0757-0200	7	1	RES 5.62K 1% .12	00746	CRB14 OR CRB25
A28R646	0698-4431	8	1	RES 2.05K 1% .12	00746	CRB14 OR CRB25
A28R647	0757-0279	0	1	RES 3.16K 1% .12	00746	CRB14 OR CRB25
A28R648	0698-3496	3	1	RES 3.57K 1% .12	00746	CRB14 OR CRB25
A28R649	0757-0424	7	1	RES 1.1K 1% .125	00746	CRB14 OR CRB25
A28R650	0757-0438	3	1	RES 5.11K 1% .12	00746	CRB14 OR CRB25
A28R651	0757-0999	1	1	RES 47.5 1% .5W	01074	H2
A28R652	0757-0280	3	1	RES 1K 1% .125W	00746	CRB14 OR CRB25
A28R653	0757-0280	3	1	RES 1K 1% .125W	00746	CRB14 OR CRB25
A28R999	0699-1503	1	1	RES .05 100% TKF	00746	MCR18EZHJW00E0
A28RA100	1810-0316	1	1	NETWORK-RES DIP	02483	761-3-R10K
A28RV103	2100-3352	7	1	RES-TRMR 1K 10%	03744	3386X-Y46-102
A28RV104	2100-3349	2	1	RES-TRMR 100 10%	03744	3386X-Y46-101
A28RV123	2100-3207	1	1	RES-TRMR 5K 10%	03744	3386X-Y46-502
A28RV404	2100-0554	5	1	RES-TRMR 500 10%	03744	3386P-Y46-501
A28RV435	2100-3207	1	1	RES-TRMR 5K 10%	03744	3386X-Y46-502
A28RV438	2100-3274	2	1	RES-TRMR 10K 10%	03744	3386X-Y46-103
A28RV455	2100-0567	0	1	RES-TRMR 2K 10%	03744	3386P-Y46-202
A28RV461	2100-3274	2	1	RES-TRMR 10K 10%	03744	3386X-Y46-103
A28RV500	2100-3383	4	1	RES-TRMR 50 10%	03744	3386P-Y46-500
A28RV501	2100-3383	4	1	RES-TRMR 50 10%	03744	3386P-Y46-500
A28RV502	2100-3273	1	1	RES-TRMR 2K 10%	03744	3386X-Y46-202
A28RV503	2100-0567	0	1	RES-TRMR 2K 10%	03744	3386P-Y46-202
A28RV504	2100-3210	6	1	RES-TRMR 10K 10%	03744	3386P-Y46-103
A28TP101	0360-2264	6	1	TERM.-TEST POINT	10358	1095D
A28TP102	0360-2264	6	1	TERM.-TEST POINT	10358	1095D
A28TP103	0360-2264	6	1	TERM.-TEST POINT	10358	1095D
A28TP104	0360-2264	6	1	TERM.-TEST POINT	10358	1095D
A28TP105	0360-2264	6	1	TERM.-TEST POINT	10358	1095D
A28TP106	0360-2264	6	1	TERM.-TEST POINT	10358	1095D

Table C-14. 8131A Option 020 Channel 2 Board Parts List (continued)

Reference	HP Part #	CD	Qty	Description	Manuf'r	Part #
A28TP107	0360-2264	6	1	TERM.-TEST POINT	10358	1095D
A28TP403	0360-2264	6	1	TERM.-TEST POINT	10358	1095D
A28TP404	0360-2264	6	1	TERM.-TEST POINT	10358	1095D
A28U100	1820-3665	0	1	IC-MM74HCT245N	01698	SN74HCT245N
A28U101	1820-3847	0	1	IC-MM74HCT138N	01698	SN74HCT138N
A28U102	1820-3081	4	1	IC-MC74HC74N	01698	SN74HC74N
A28U103	1820-3298	5	1	IC-MM74HC32N	02037	MC74HC32N
A28U104	1826-0861	4	1	D/A 10-BIT	03285	AD7533LN
A28U105	1826-0861	4	1	D/A 10-BIT	03285	AD7533LN
A28U106	1820-3399	7	1	IC-MC74HC273N	01698	SN74HC273N
A28U107	1826-0877	2	1	A/D 8-BIT	03285	AD7574KN
A28U108	1820-1315	3	1	ANLG MUXR MC1405	02037	MC14051BCP
A28U109	1820-0493	6	1	IC 307	03406	LM307N
A28U110	1820-3847	0	1	IC-MM74HCT138N	01698	SN74HCT138N
A28U111	1820-3082	5	1	IC-MC74HC374N	01698	SN74HC374N
A28U112	1826-0285	6	1	IC MC79L05ACP	02037	MC79L05ACP
A28U113	1826-0315	3	1	IC 348	03406	LM348N
A28U114	1826-0161	7	1	IC 324	02037	LM324N
A28U115	1820-3097	2	1	IC-MM74HC08N	02037	MC74HC08N
A28U117	1820-3373	7	1	IC-MM74HC221AN	03406	MM74HC221AN
A28U118	1820-0493	6	1	IC 307	03406	LM307N
A28U120	1820-2924	2	1	IC-MC74HC02N	01698	SN74HC02N
A28U121	1820-3081	4	1	IC-MC74HC74N	01698	SN74HC74N
A28U122	1820-3082	5	1	IC-MC74HC374N	01698	SN74HC374N
A28U123	1820-3081	4	1	IC-MC74HC74N	01698	SN74HC74N
A28U124	1820-3081	4	1	IC-MC74HC74N	01698	SN74HC74N
A28U126	1820-3081	4	1	IC-MC74HC74N	01698	SN74HC74N
A28U401	1NB7-8179	7	1	HYRIDS	28480	1NB7-8179
A28U402	1826-0524	6	1	IC 324A	03406	LM324AN
A28U403	1826-0207	2	1	IC 318	01698	LM318P

Table C-14. 8131A Option 020 Channel 2 Board Parts List (continued)

Reference	HP Part #	CD	Qty	Description	Manuf'r	Part #
A28U404	1826-0138	8	1	IC 339	01698	LM339N
A28U405	1826-1460	1	1	IC 201	03406	LM201AN
A28U406	1820-0493	6	1	IC 307	03406	LM307N
A28U407	1826-0161	7	1	IC 324	02037	LM324N
A28U408	1826-0207	2	1	IC 318	01698	LM318P
A28U409	1826-0161	7	1	IC 324	02037	LM324N
A28U410	1858-0058	8	1	XSTR ARY 14P-DIP	02037	MPQ3906
A28U411	1858-0087	3	1	XSTR ARY 14P-DIP	02037	MPQ3904
A28U412	1858-0087	3	1	XSTR ARY 14P-DIP	02037	MPQ3904
A28U413	1858-0087	3	1	XSTR ARY 14P-DIP	02037	MPQ3904
A28U415	1826-0600	9	1	IC 074A	01698	TL074ACN
A28U416	1858-0087	3	1	XSTR ARY 14P-DIP	02037	MPQ3904
A28U417	1826-0161	7	1	IC 324	02037	LM324N
A28U418	1858-0087	3	1	XSTR ARY 14P-DIP	02037	MPQ3904
A28U601	1826-0315	3	1	IC 348	03406	LM348N
A28U602	1826-0315	3	1	IC 348	03406	LM348N
A28U603	1826-0161	7	1	IC 324	02037	LM324N
A28VR101	1902-0956	0	1	DIO-ZNR 8.2V 5%	02037	
A28VR403	1902-0963	9	1	DIO-ZNR 16V 5%	02037	SZ30035-21RL
A28VR404	1902-0956	0	1	DIO-ZNR 8.2V 5%	02037	
A28VR405	1902-0956	0	1	DIO-ZNR 8.2V 5%	02037	
A28VR406	1902-0949	1	1	DIO-ZNR 4.3V 5%	02037	
A28VR407	1902-0945	7	1	DIO-ZNR 3V 5%	02037	SZ0035-3RL
A28VR409	1902-0951	5	1	DIO-ZNR 5.1V 5%	02037	SZ30035-9RL
A28VR412	1902-0950	4	1	DIO-ZNR 4.7V 5%	02037	
A28VR415	1902-0950	4	1	DIO-ZNR 4.7V 5%	02037	
A28VR417	1902-0963	9	1	DIO-ZNR 16V 5%	02037	SZ30035-21RL
A28VR419	1902-0953	7	1	DIO-ZNR 6.2V 5%	02037	SZ30035-11RL
A28VR495	1902-0951	5	1	DIO-ZNR 5.1V 5%	02037	SZ30035-9RL
A28VR602	1902-0953	7	1	DIO-ZNR 6.2V 5%	02037	SZ30035-11RL

Table C-14. 8131A Option 020 Channel 2 Board Parts List (continued)

Reference	HP Part #	CD	Qty	Description	Manuf'r	Part #
A28VR603	1902-0958	2	1	DIO-ZNR 10V 5%	02037	
A28VR604	1902-0945	7	1	DIO-ZNR 3V 5%	02037	SZ0035-3RL
A28W103	1258-0141	8	1	JUMPER-REM	01380	530153-2
A28W403	08131-61607	1	1	CBL SEMI RIGID	28480	08131-61607
A28W404	08131-61607	1	1	CBL SEMI RIGID	28480	08131-61607

D

Backdating

Introduction

This appendix contains backdating information, which adapts this manual to instruments with serial numbers as shown below.

Changes are listed in the serial number order that they occured in the manufacture of the instrument.

HP 8130A

Instruments with serial numbers lower than 2905G00321 may show the following differences:

Table D-1. Timing Board

			08130-66505 (Std)	08130-66525 (Opt. 020)	
L-Fix	50μH	9100-2891	L400	L400	L600
R-Fix	100kΩ	0757-0465	R438	R438	R638
R-Fix	750kΩ	0698-8960	R452	R452	R652
R-Fix	75kΩ	0757-0462	R453	R453	R653
R-Fix*	1.47kΩ	0757-1094	R101	R101	
LED Lamp*		1990-1278	DS100	DS100	
Switch DIP*		3101-0408	S100	S100	

*Connected between U104/12 and U112/21 on line LWRTEEPR

Table D-2. Output Board

			08130-66506
R-Fix*	1.47kΩ	0757-1094	R127
LED Lamp*		1990-1278	DS100
Switch DIP*		3101-0408	S101
R-Fix	301	0757-0410	R30
C-Fix	10pF	0160-5735	C19

*Connected between U102/12 and U104/21 on line LWRTEEPR

HP 8131A

Instruments with serial numbers lower than 2839G00781 may show the following differences:

Table D-3. Timing Board

			08131-66505 (Std)	08131-66525 (Opt. 020)	
L-Fix	50μH	9100-2891	L400	L400	L600
R-Fix	100kΩ	0757-0465	R438	R438	R638
R-Fix	750kΩ	0698-8960	R452	R452	R652
R-Fix	75kΩ	0757-0462	R453	R453	R653
R-Fix	464kΩ	0698-3260	R539	R539	R739
R-Fix	909kΩ	0698-8961	R551	R551	R751
R-Fix*	1.47kΩ	0757-1094	R101	R101	
Conn.Post*		1251-5380	J400	J400	J600
LED Lamp*		1990-1278	DS100	DS100	
Switch DIP*		3101-0408	S100	S100	
R-Fix*	1.47kΩ	0757-1094	R322	R322	
R-Fix	4.02kΩ	0698-3558	R323	R739	
Coil-MLD	50nH	9100-7891	L300	L300	
R-Fix	1kΩ	0757-0280	R303	R739	

*Connected between U104/12 and U112/21 on line LWRTEEPR

Table D-4. Output Board

	08130-66506
R-Fix 15.4kΩ 0698-3540	R424
R-Fix 8.25kΩ 0757-0441	R425
R-Fix 100kΩ 0757-0465	R508, R520
R-Fix 18.2Ω 0698-7833	R504, R506, R521, R522

Table D-5. CPU Board

	08130-66503
EPROM1 08131-13701	
08131-13703	U204
EPROM2 08131-13702	
08131-13704	U205

HEWLETT PACKARD
Customer Order No.
08131-90001
Printed in F.R.G., 1990
E1090

For Internal Use Only
08131-90001

HEWLETT PACKARD

MANUAL CHANGES

02/93

Manual for Model Number	8130A 8131A
Manual printed on	October 1990
Manual Part Number	08131-90001

Make all ERRATA corrections.

Check the following table for your instrument serial prefix/serial number and make the listed changes to your manual.

New Item

Serial Prefix or Serial Number		Manual Changes
8130A:		
ERRATA		
2905G00391		1
2905G00631	and above	2
2905G00641	and above	3
2905G00651	and above	4
2905G00681	and above	5
2905G00691	and above	6
2905G00791	and above	7

Serial Prefix or Serial Number		Manual Changes
8131A:		
ERRATA		
2839G00901		1
2839G01111	and above	3
2839G01131	and above	4
2839G01161	and above	5
2839G01171	and above	6
2839G01231	and above	7

MODEL 8130A/8131A
INDEX OF MANUAL CHANGES

MANUAL CHANGES	MISC.	A1	A2	A3	A4	A5	A14	A26
ERRATA								
1	A1	L1						
2						R303		
3						Q312, Q313 Q412 Q512 S100 DS100 R101 S101 DS100		Q400 Q202 S101 DS100 R127
4							R130 CR130	
5	A0 W1 MP60					R206		
6				U202 U203				R150
7	MP216							

MANUAL CHANGES	MISC.	A27
ERRATA		
3		Q202
6		R150

MODEL 8130A/8131A
ERRATA

On Page C-46, Replaceable Parts List, change to read:

A26	C473	0160-5746	C-FXD .1UF

On Page B-61, Replaceable Parts List, change to read:

A26	R469,470,471	0757-0280	R-FXD 1K

On Page B-6, Master List, add:

MP40	8160-0428	FRI ROUND STRIP

On Page 6.5-41, Schematic 6D, change to read:

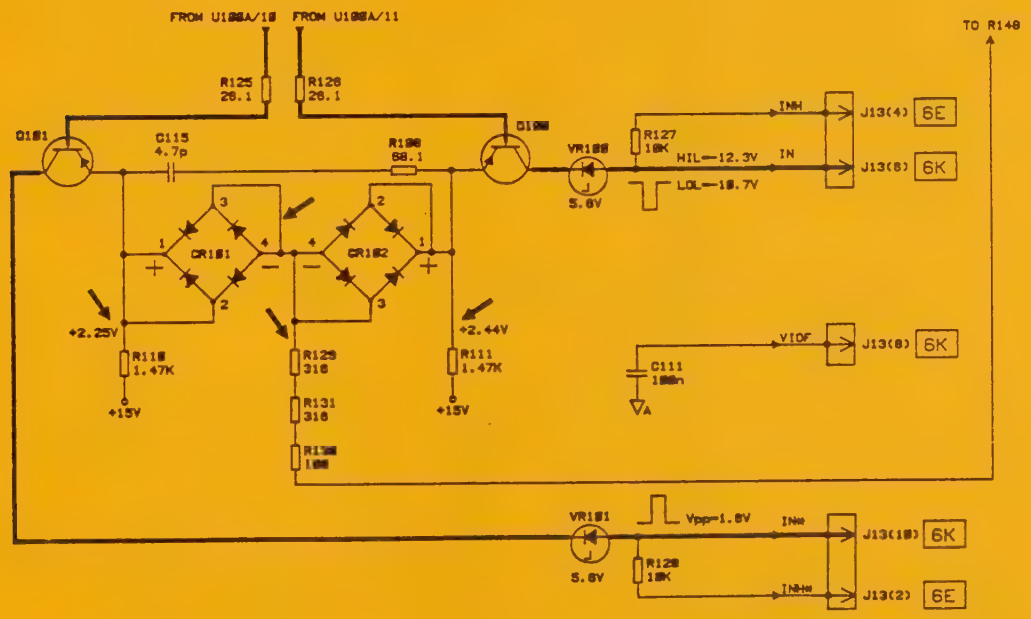

MODEL 8130A/8131A
ERRATA

On Page 6.0-6 replace Figure 6.0-4 with the attached one:

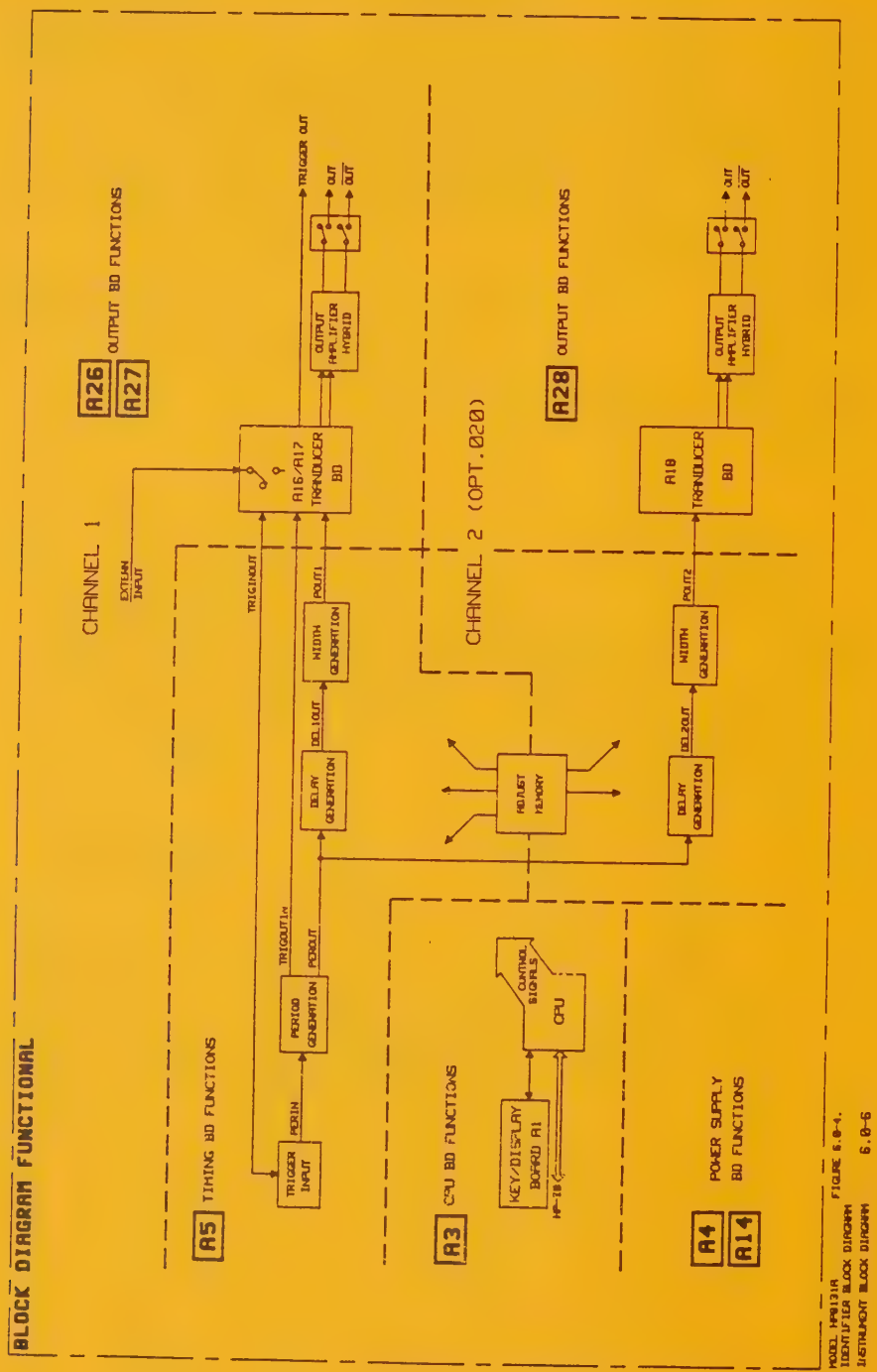

On Page 4-3 Performance Test, Recommended Test Equipment, change to read:

Cable Assembly (5)	HP 8120-1840	50Ohm, 122cm (48inches) coax, 2BNC(m)
Counter	HP 5335A #030,040 HP 5370B	...to 1.3 GHz

In the text alway's change 8120-1839 to read 8120-1840 (122cm).

At the beginning of the Performance Tests, add the following NOTE to "Test Records":

NOTE: Copy the entire Test Records (short Delay - Pulse Aberration) for the second channel, if installed.

Change in the Transition Time Test the Procedure to read:

Procedure

1. Set up HP 54121T Oscilloscope:

   a. press AUTOSCALE
   b. Select the Channel menu and set the Attenuation factor to 10
   c. center one pulse horizontal and vertical on screen (for example.....

On Page 4-5/4-6 Performance Tests, Period Test, change to read:

Equipment:

Digitizing Oscilloscope with Accessory (HP 54121T)
Counter
Cable, 50 Ohm, BNC to BNC, coaxial

Set up:

1. Connect the HP 8130A/8131A's TRIG OUTPUT via:

   a. a BNC (m) to SMA (f) adapter (HP 8130A only)
   b. SMA (m-m) coaxial cable assembly
   c. an APC 3.5mm, 20dB Attenuator (f-m)

   to the TRIG input of the HP 54121A.

2. Connect the HP8130A/HP8131A's OUTPUT 1/2 via a similar Accessory assembly to the Input 4 of the HP 54121A.

3. Set the 8130A/8131A:
   .....

Procedure

1. For Period settings/checks to 100ns use the scope.
   For Period settings > 100ns use the counter.

2. Set the HP 54121T Oscilloscope:

   a. presss AUTOSCALE
   b. select the Display menu and set the Number of Averages to 64
   c. select the delta V menu and turn the voltage markers On
   d. set Preset-Levels = 50-50% and press Autolevel set
   e. select the delta T menu and turn the time Markers On
   f. set START ON EDGE = Pos1 and STOP ON EDGE = Pos 2

3. Press the Precise Edge Find key for each new period setting.

4. Check the period at settings upto 100 ns as shown in the table

Period	Acceptable	Range	TR entry
2.00ns	1.80ns	2.20ns	1-1 (HP 8131A only)
3.33ns*	3.063ns	3.596ns	1-1 (HP 8130A only)
....	.....	.....	.....

   * To meet this specification it is acceptable to programm the value to less than 3.33ns.

5. Connect the OUTPUT 1/2 to the counters channel A input (HP 5335A), FREQ input (HP 5370B).

6. Check the period at Settings > 100ns as shown in the Table.

ON PAGE 3-3, step 6./7. CHANGE TO READ:

6. Set up HP 54121T Oscilloscope:

   a. press AUTOSCALE
   b. select the 'Display' menu and set the 'Number of Averages' to 16
   c. select the 'Timebase' menu and set 'DELAY' so that one pulse is positioned in the center of the screen.
   d. press 'More' and select the 'Measure' menu
   e. press 'More' to obtain '+Width' and '-Width' functions

7. With WID = 1 ns check the NORMal and COMPlement output signals to be 940 ps +- 30 ps.
   To measure the NORMal pulse press '+Width' on scope.
   On the hp 8131A switch to COMPlement.
   To measure the COMPlement pulse press '-Width' on scope.

On Page 3-3 Adjustments, add the following procedure after "The Output Board(s) must be checked and adjusted after replacement or after a timing board has been replaced":

1. If channel 2 is fitted, start adjustment with the board for that channel.
2. Place the board to the service connector.
3. Switch the instrument ON.

4. Set the HP 8131A:

MODE	E.WIDTH		
	pos. trigger edge		
OUTPUT	THRE	-5.0 V	
	HIL	0.0 V	COMPlement
	LOL	-5.0 V	

5. Connect accurate 50 Ohm feedthrough terminations (0.1%) to the output connectors. Switch the outputs to ENABLE.

6. With a DVM, set to Vdc, internal trigger, measure the voltage at A6 U401 pin 19/L403/W404 for 0.00 V +- 10 mV.
   If necessary adjust A6RV123.

7. Switch to NORMal and check for
   -5.005 V +- 5 mV <-- Firmware REV 1.5 installed!
   -5.05 V +- 5 mV <-- Firmware REV 1.3 installed!
   If necessary adjust A6RV404.

8. Set the HP 8131A:

MODE	THRE	+5.0 V	
OUTPUT	HIL	5.0 V	NORMal
	LOL	0.0 V	

9. With the DVM measure +5.005 V +- 10 mV <-- REV 1.5 installed!
   +5.05 V +- 10 mV <-- REV 1.3 installed!
   If necessary adjust A6RV455.
10. Set the outputs to COMPlement and check for 0.00 V +- 15mV.

11. Set The HP 8131A:

MODE	THRE	-5.0 V	
OUTPUT	HIL	0.0 V	NORMal
	LOL	-620 mV	

12. Notice the value measured with the DVM (typ. -625 mV).

13. Change the LOL to -630 mV. If necessary adjust A6RV103 to the above value + 10 mV (typ. -635 mV +- 5 mV).

14. Set the outputs to COMPlement and check for 0.00 V +- 15 mV.

    * FOLLOW THE PROCEDURE IN THE SERVICE MANUAL, page 3-3 - 3-5, step 1-24!
    * Do step 25,26 and 27 of the Service Manual, Adjustments 3-5!

15. Repeat step 1 to 14 of this procedure for Chan 1 OUT if necessary. (Refer to the Note below step 28 on page 3-5).

    * Do step 28,29 and 30 of the Service Manual, Adjustments 3-5!

On Page 6-7-18, Troubleshouting, add the following Procedure:

Additional troubleshouting hints for HP 8130A / HP 8131A to make sure the Timing Board is working well!

Equipment: Scope 1725A (or 54503A) with Probe 10017A (10:1, low capacity)
Set scope to Internal Trigger, Channel A.

Set HP 8130A/'31A: PERIOD 100ns
SET

1. Measure with the probe the PULSIN signal at A16R102 (HP 8130A)
   A16R900 (HP 8131A)

   period: 100ns
   duty cycle: 50/50
   levels: 0 V to -0.6V

2. Measure in case of HP 8131A the TRANIN signal at A16R917 (TP4)

   DC level approx. -0.6 V +- 100 mV

   Measure the TRIGOUTIN signal at A16R701

   period: 100ns
   duty cycle: 10/90
   levels: 0 V to -0.6V

Set HP 8131A to PERIOD 99 ns

Measure TRIGOUTIN signal

period:	99ns
duty cycle:	50/50
levels:	0 V to -0.6V

3. Measure the Trigger Output signal at the front panel connector.

4. Connect the trigger signal to scope trigger input. Set scope to Ext. Trig. Measure with probe at A16R900 / A16R102 (see step 1.) and vary the PERIOD, DELAY, and WIDTH/Duty cycle of the HP 8130A/'31A.

On Page 4-27, change to read:

8. Max rms jitter
(delay = 250ns) is 77.5 ps

On Page 4-42/4-48, delay jitter: <= 77.5 ps

On Page 5-14,Table 5-2. Replaceable Parts change to read:

Ref. Design.	Part Descr.	P/N
W10-W13	Cable Assy, Output	08130-61613

On Page B-6, Table B-2. 8130A Standard Instrument Parts List change to read:

Ref. Design.	Part Descr.	P/N
W10/W11	Cable Assy, Output	08130-61613

On Page B-68, Table B-10. 8130A Option 020 Instrument Parts List change to read:

Ref. Desing.	Part Descr.	P/N
W12/W13	Cable Assy,Output	08130-61613

On Page 2-11, Installation add:

Installation of Output Cables

1. To replace the output cables fastened to front panel (MP13), the covers, the output and timing boards must be removed using the procedures detailed above.

2. Remove the front panel assy as detailed in 'Installation of Key Board Assy'.

3. To loosen/fasten the connector -BNC(f)/SMA(f)- on the front panel assy do the following:
   * remove the eight securing screws of the key board and remove it carefully
   * remove the old BNC(f)/SMA(f) connector from the front panel assy

   HP 8130A only:
   * remove the finger-tightened 'SMB(m)-cap'of the SMB connector of the new cable
   * remove the white plastic insulator of the SMB connector
     ! Take CAUTION to the pin!
   * remove the nut and the washer fastener from the BNC connector and cable
     NOTICE the fifference of the nut:
     - one side flat
     - one side a'ring'
   * Fit the cable through the hole in the front panel

   * fasten the new BNC(f)/SMA(f) connector to the front panel assy

4. Careful fit the cable -SMB open/SMA(m) connector -through the hole of the sub-panel (MP3) to the card cage (MP10). Refer to page 5-11, Figure 5-7.
   * Channel 1 cables through the lower holes
     Channel 2 cables through the upper holes (if fitted)

5. HP 8130A only: Replace the insulator and the cap to the SMB connector and fasten it well!

6. Install one board after the other and fit the cables to the correct connectors.

7. Do a functional test.

8. Reassemble other instruments components and covers by reversing above detailed procedures.

On Page 1-12 / General Information,change to read:

Gate and Burst Mode: Only periods < 100ns, first period may be 20% + 800ps longer than subsequent periods.

On Page 5-6 and 5-11: MP8 change to read MP7
On Page 5-7 and 5-11: MP7 change to read MP8
On Page 5-11: MP13 change to read MP3
On Page 5-12: DELETE, MP3

On Page 4-13, Performance Test change the Set-Up to read:

1. Set the HP 8130A/....

	HP 8130A	
	CH1	CH2
DOUB	20ns	3.33ns

MANUAL CHANGE 1

On Page 5-14, change the Table of Replaceable Parts to read:

A1	Board Assy, Key Std.	08130-66511	08131-66511
A1	Board Assy, (Opt.020)	08130-66531	08131-66531

On Page B-5/B7, change the Table of Parts List to read:

A1	08130-66511	BD AY KEY STD

On Page B-68/B-69, change the Table of Parts List to read:

A1	08130-66521	BD AY KEY OPT

On Page C-5/C-7, change the Table of Parts List to read:

A1	08131-66511	BD AY KEY STD

On Page C-61/C-62, change the Table of Parts List to read:

A1	08131-66521	BD AY KEY OPT

On Page B-8/B-71/C-64, Parts List:

ADD:	A1	L1	9140-0748	L-FXD 250

On Page 6.3-45 change Schematic to read:

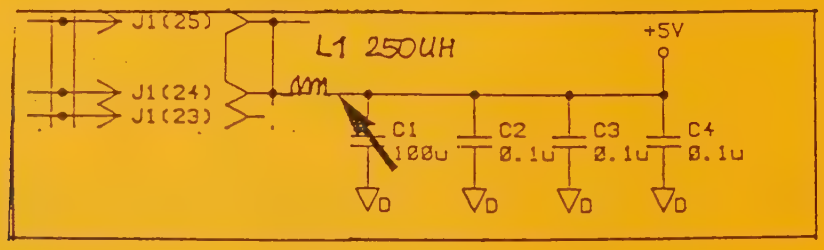

On Page 6.3-29, and 6.3-39 change Component-Layout to read:

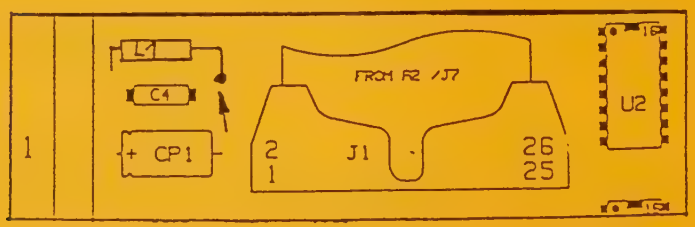

MANUAL CHANGE 2

On Page B-29/B-86, change the Table of Replaceable Parts to read:

EDC-LBL				
D-3206	A5	R303	0757-0317	R-FXD 1.33 KOHM

MANUAL CHANGE 3

On Page B-52, change the table of Replaceable Parts to read:

E-3206	A26	Q400	1853-0442	TRANS. SI PNP 2N3867

On Page B-27/28,C27/28,B84,C77, change the Table of Replaceable Parts to read:

D-3206	A5	Q312,313 Q412,512	1855-0432	MOSFET

On Page B-52, change the Table of Replaceable Parts to read:

E-3206	A26	Q202	1855-0432	MOSFET

On Page B-109, change the Table of Replaceable Parts to read:

E-3206	A27	Q202	1855-0432	MOSFET

On Replaceable Parts List,

delete:

on Page	B-26	A5	J101, 102
	B-37	A5	W100
	B-50	A26	J100,101
	B-51	A26	MP108
	B-67	A26	W101
	C-26	A5	J100,101
	C-37	A5	W100

Note: EDC-LBL: Engineering Date Code
Label = Board Revision
+ Date Code

MANUAL CHANGE 3 (Cont.)

On Replaceable Parts List,

a d d :

On Page:	B-35	A5	S100	3101-0569	SW-SL DPT
	B-26	A5	DS100	1990-1278	LED-LMP
	B-28	A5	R101	0757-1094	RES 1.47K 1%
	B-64	A26	S101	3101-0569	SW-SL DPT
	B-50	A26	DS100	1990-1278	LED-LMP
	B-54	A26	R127	0757-1094	RES 1.47K 1%
	C-35	A5	S101	3101-0569	SW-SL DPT
	C-26	A5	DS100	1990-1278	LED-LMP
	C-28	A5	R101	0757-1094	RES 1.47K

EDC-LABEL: A5 = D-3206
A26 = E-3206

On Pages 6.4-19 [5A] / 6.4-35 [5A] / 6.5-33 [6A], Schematics, change to read:

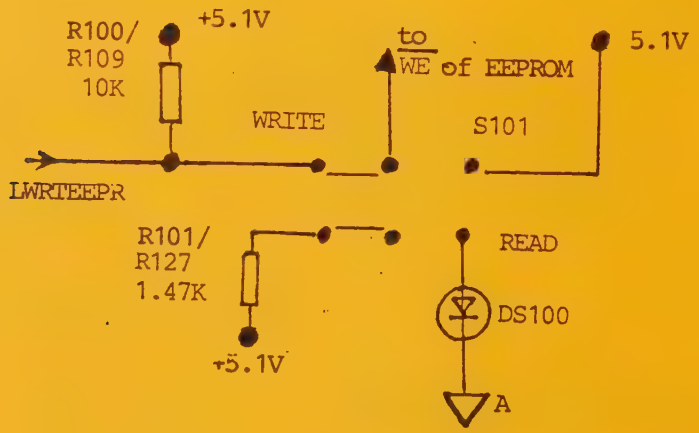

MANUAL CHANGE 4

On Page B-41/C-41, Replaceable Parts List add:

B-3208	A14	R130	0757-0401	Res 100 1%

On Page B-39/C-39, Replaceable Parts List, add:

B-3208	A14	CR130	1901-1098	DIO IO 4150

NOTE: R130,CR130 will be backloaded

On Schematic A4, Page 6.2-15, change to read:

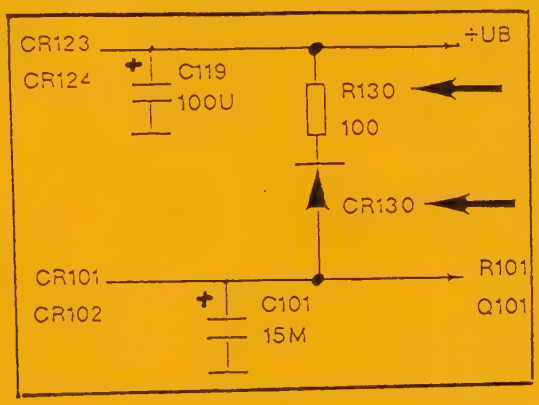

MANUAL CHANGE 5

On Page B-6/C-6, change to read/add:

A0	MP60	0380-0643	SCREW,HPIB
A0	W1	5180-2471	HP-IB-ASSY

On Page B-29/B-85/C-29/C-78, Change the Table of Replaceable Parts to read:

D-3214	A5	R206	0698-3260	RES 464K 1%

MANUAL CHANGE 6

On Page B-54, Change the Table of Repl.Parts to read:

E-3220	A26	R150	0757-0462	RES 75K 1%

On Page B-111, Change the Table of Repl.Parts to read:

E03220	A27	R150	0757-0462	RES 75K 1%

On Page B-14, change the Table of Repl.Parts to read:

	A3	U202 U203	1818-3335	IC RAM

On Page C-14, change the Table of Repl.Parts to read:

	A3	U202 U203	1818-3335	IC RAM

MANUAL CHANGE 7

On Page B-6/C-6, Replaceable Parts List ADD:

MP216	5021-2840	KEY-LOCK FOOT

Note: Aditional needed for MP216 (Rear Bottom Feet)

THE MP MASTER

9282-1154
Binder Only Part No.
Made in U.S.A.